(Elevation A)

LIGHTED CHANNEL LETTERS - BEIGE VINYL OVERLAY

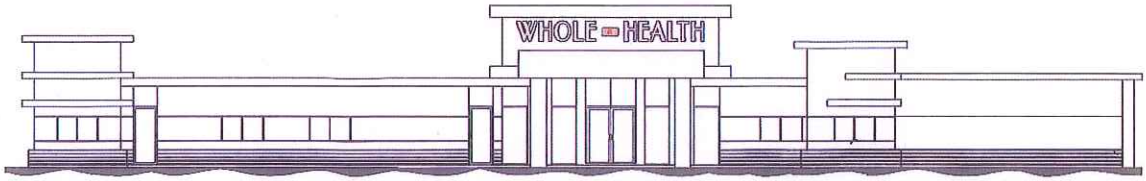

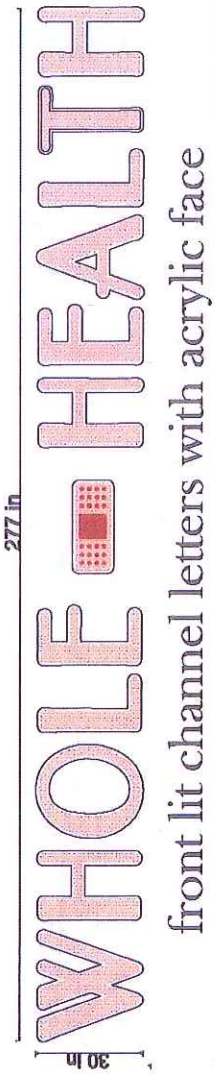

LED ILLUMINATED CHANNEL LETTER INSTALLATION & SCHEMATIC DIAGRAM

LEGEND

1 . . . LED DIODE MODULE
2 . . . POWER CONNECTOR
3 . . . POWER WIRE CONNECTOR
4 . . . LOW VOLTAGE CLASS 2 POWER WIRES(10-12AWG)
5 . . . ACRYLIC CHANNEL FACE
6 . . . CHANNEL LETTER CAN
7 . . . POWER SUPPLY
8 . . . AC INPUT WIRE IN 1/2" NON METALLIC CONDUIT TO AC SOURCE BY OTHERS
9 . . . DISCONNECT SWITCH
10 . . . MASONRY WALL
11 . . . 1/4" x 3" TAPCON, MIN EMBEDMENT: 3", MIN 3/LETTER

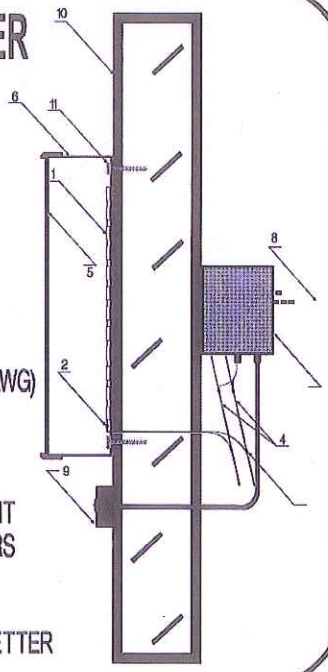

STRUCTURAL NOTES: ASSEMBLY PER NEC 600-3

GOVERNING CODE: THE STRUCTURAL CALCULATIONS COMPLY WITH THE PROVISIONS OF SECTION 1609.1.1 OF THE 5th EDITION (2014) OF THE FLORIDA BUILDING CODE, AND IN ACCORDANCE WITH CHAPTERS 26-30 OF ASCE 7-10 (2010 EDITION), USING THE ULTIMATE WIND SPEED OF 175 MPH FOR PALM BEACH COUNTY (170 FOR BROWARD AND 175 FOR DADE COUNTIES), AND WHERE THE WIND MAP VALUES ARE CONVERTED TO THE ASD FORMAT USING V asd = V ult*(Sq. Root of .6).
ELECTRICAL INFORMATION PROVIDED AS REFERENCE ONLY AND IS TO BE INSTALLED BY A LICENSED CONTRACTOR, NO ENGINEERING CERTIFICATION IS OFFERED WITH ANY ELECTRICAL INFORMATION CONTAINED HEREIN.
ALL STRUCTURAL ALUMINUM IS TO BE T6 OR BETTER.

ANCHORS! TO BE ITW BUILDEX, ELCO TAPCON, POWERS, RAWL, OR MFR. RATED EQUAL.
10x ANCHOR DIAMETER SPACING IS REQUIRED BETWEEN ANCHORS AND EDGE OF CONC. MIN.
IF UNSPECIFIED, A 24" MAX O.C. SPACING OF ANCHORS SHALL BE USED + EACH CORNER.
WOOD ANCHORS TO BE NON-CORROSIVE GRADE 2 OR GRADE 5 LAG BOLTS OR EQ, ¾" MIN. ED.
#2 SOUTHERN YELLOW PINE MINIMUM USED IN ALL WOOD CALCULATIONS.
THROUGHBOLTS SHALL BE FITTED WITH A 1" MIN. WASHER & DOUBLE NUT U.N.O.
MINIMUM EMBEDMENT DEPTH DOES NOT INCLUDE STUCCO, FINISHES, OR SHIM SPACING.
STRUCTURAL BOLTS TO BE A-325, GRADE 5. A 2" MAX EXPOSED SHANK IS TO BE USED U.N.O.
HOST STRUCTURE IS BY OTHERS AND SHALL BE DESIGNED TO CARRY LOADS BY PROPOSED SIGN
THIS ENGINEER HAS NOT VISITED THE JOBSITE. DESIGN IS BASED ON CONTRACTOR SUPPLIED DATA. IF ANY FIELD CONDITIONS THEN SPECIFIED HEREIN, THIS ENGINEER SHALL BE NOTIFIED

SQUARE FOOT CALCULATIONS:

Proposed Sign -277"x30" = 58 sq ft proposed
Alloawable - FRONTAGE - 145' x 12 x 15% = 261 sq ft allowable

COLOR SCHEDULE:

BEIGE Face with White Outline
White Trim and White return

ELECTRICAL NOTES:

ALL ELECTRICAL DESIGN AND EXISTING PRIMARY ELECTRICAL IS BY OTHERS AND IS NOTED FOR REFERENCE ONLY AND NOT PART OF CERTIFICATION. WORK SHALL BE APPROVED AND INSALLED BY A LICENSEC PROFESSIONAL.
ALL ELECTRICAL COMPONENTS SHALL BE U/L LISTED AND SHALL COMPLY WITH THE GOVERNING EDITION OF THE NATIONAL ELECTRIC CODE IN EFFECT AT THE TIME OF PERMIT APPLICATION. SIGN SHALL BE GROUNDED IN ACCORDANCE WITH GOVERNING CODES. ALL BREAKER AND TIMING DEVICES SHALL BE IDENTIFIED AT TIME OF INSTALLATION.

1 of 1

PAGE DESCRIPTION: -SAR-
SCALE:

REMARKS	DRWN	CHKD	DATE
	R/F	DS	12/17/2013

SIGN★A★RAMA
2905 S. Congress Ave • Bay E
Delray Beach, FL 33445
561-278-7446 • Fax: 561-278-6431

WHOLE HEALTH

HOMAYOON AMIR ABTAHI
2649 NW 28TH TERRACE
BOCA RATON, FL 33434
FLORIDA P.E. #35453

VALID FOR (1) JOB at a WALDON, WITH SEALED RECEIPT