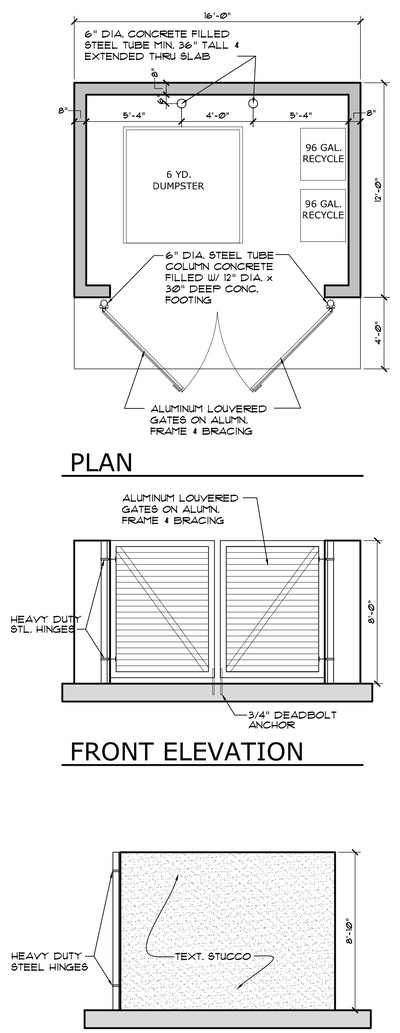

2 A1.00 DUMPSTER DETAIL
SCALE: 1/4" = 1'-0"

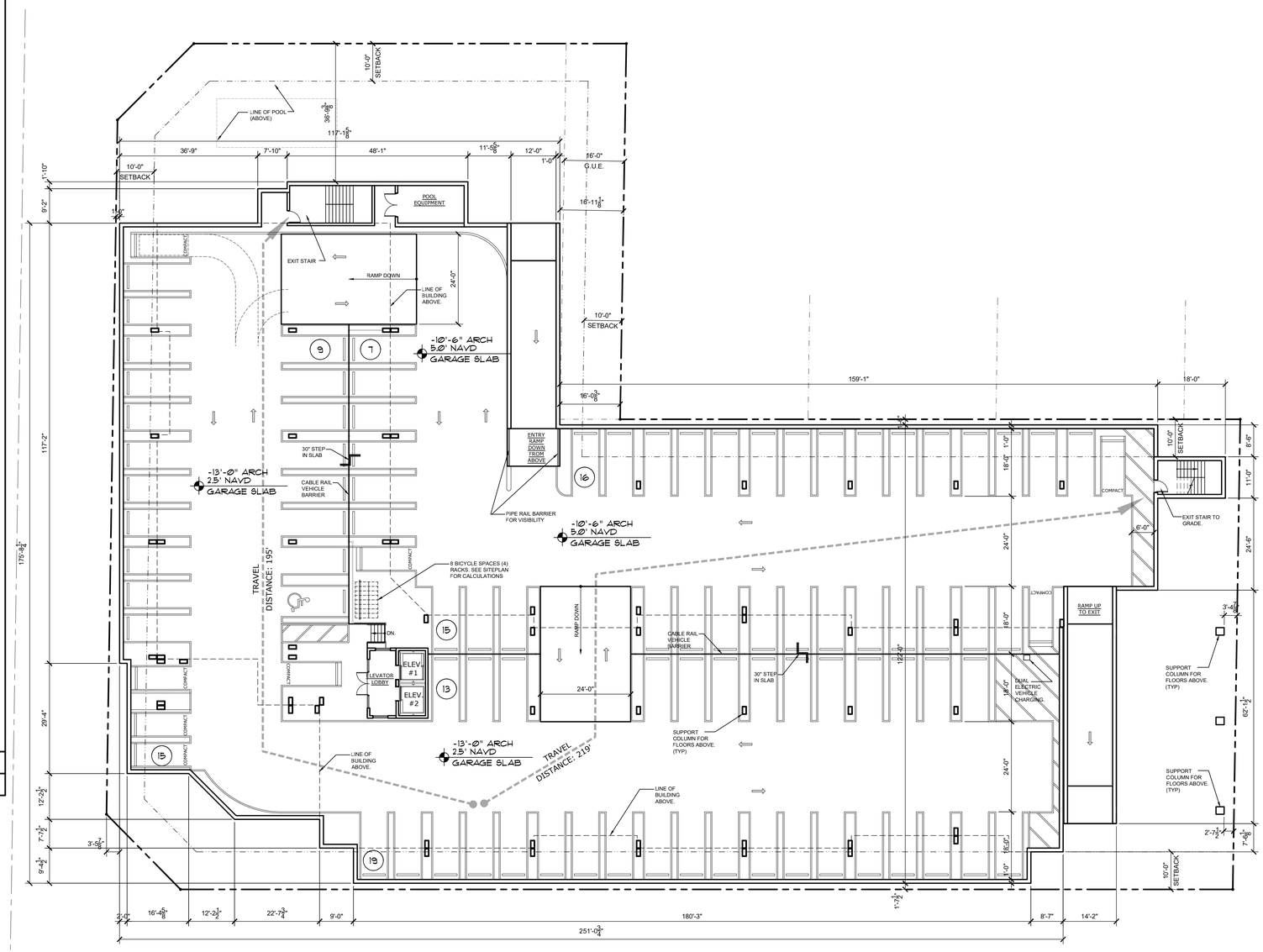

1 A1.00 PROPOSED LOWER LEVEL PARKING PLAN - 94 SPACES

SCALE: 1/16" = 1'-0"

GRAPHIC SCALE
8 0 8 32
4 4 16

NE 5TH AVENUE
DELRAY BEACH, FL 33483

REVISIONS

AREA CALCULATIONS

PARKING LEVEL:	
PARKING	37,790 S.F.
LOBBY	155 S.F.
ENTRY RAMP	719 S.F.
EXIT RAMP	874 S.F.
TOTAL AREA:	39,538 S.F.

THESE DRAWINGS ARE PREPARED PER ESTABLISHED INDUSTRY STANDARDS AND REPRESENT THE ARCHITECT AND ENGINEERS DESIGN CONCEPT. THEY ARE NOT INTENDED TO PROVIDE EVERY DETAIL OR CONDITION REQUIRED TO CONSTRUCT THE BUILDING. THE CONTRACTOR THROUGH SUBMITTALS AND OTHER COORDINATION EFFORTS IS FULLY RESPONSIBLE FOR PROVIDING A COMPLETE AND OPERATIONAL BUILDING WHETHER INDICATED ON THE PLANS OR NOT.

DRAWING TITLE
LOWER LEVEL PARKING PLAN

CURRIE SOWARDS AGUILA architects
Architecture, Planning, Interiors, & Sustainable Design
AA26001584
185 NE 4TH AVENUE SUITE 101
DELRAY BEACH, FL 33483
T:(561) 276-4951 F:(561) 243-8184
E-MAIL: office@csa-architects.com

ISSUED FOR :
SPA 10/01/19
BIDS
PERMIT
CONSTRUCTION

SEAL
STATE OF FLORIDA ROBERT G. CURRIE AR0004964 REGISTERED ARCHITECT
ROBERT G. CURRIE
FL. REG# AR0004964

PROJECT TITLE
PHG DELRAY

DATE 10/01/19 | DRAWN BY KAB
JOB NUMBER 181201
DRAWING NUMBER
A1.00

THIS DOCUMENT IS THE PROPERTY OF CURRIE SOWARDS AGUILA ARCHITECTS INC. ALL RIGHTS ARE RESERVED. ANY POSSESSION, REPRODUCTION OR OTHER USE OF THIS DOCUMENT, WITHOUT THE WRITTEN CONSENT OF CURRIE SOWARDS AGUILA ARCHITECTS INC., IS PROHIBITED.