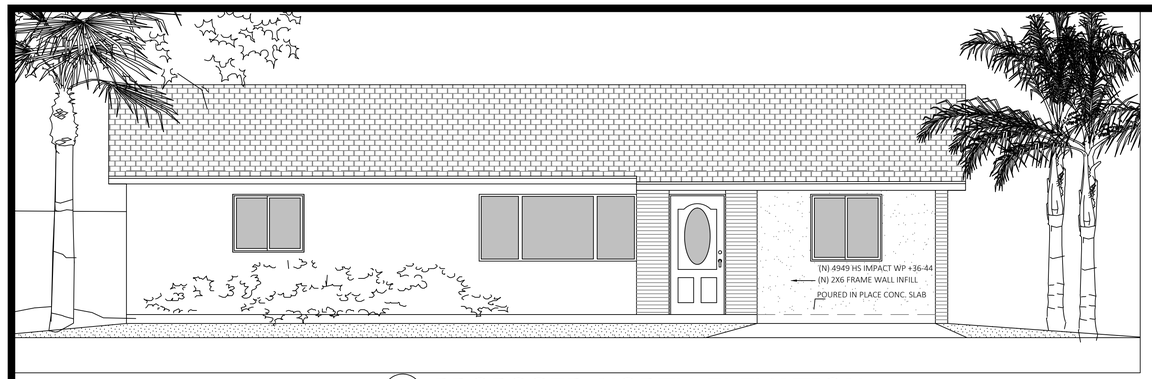

1 A–1 PROPOSED NORTH ELEVATION SCALE ¼" = 1'-0"

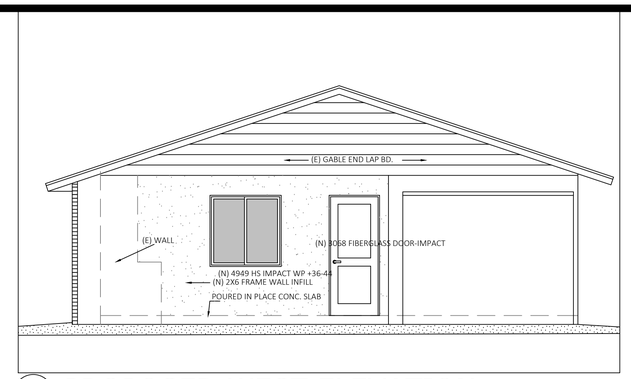

2 A–1 PROPOSED WEST ELEVATION SCALE ¼" = 1'-0"

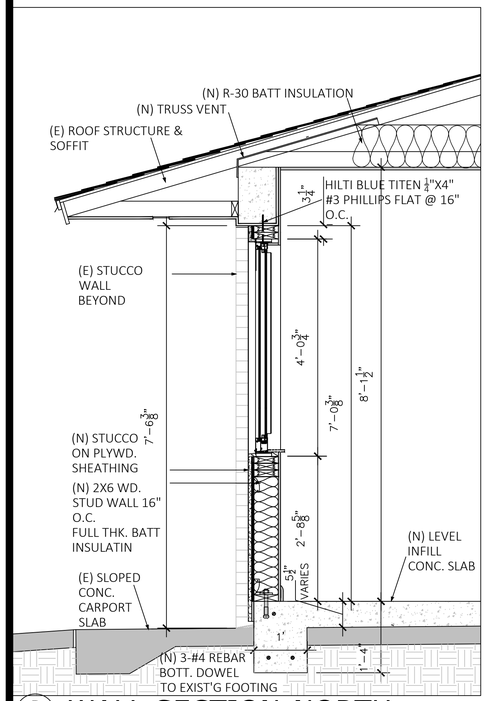

3 A–1 WALL SECTION-NORTH SCALE ¼" = 1'-0"

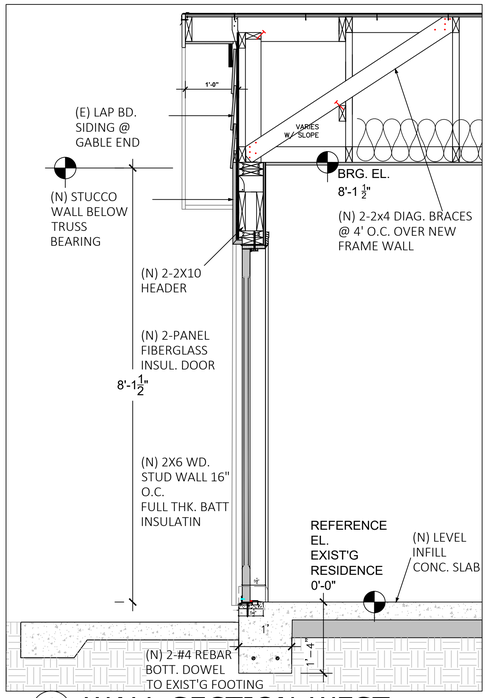

4 A–1 WALL SECTION-WEST SCALE ¼" = 1'-0"

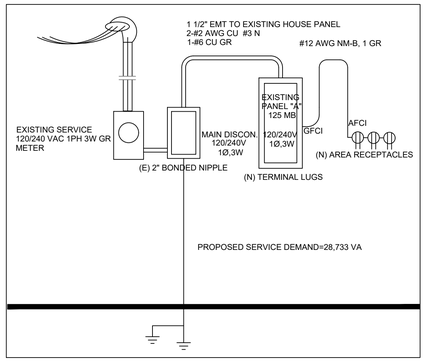

ELECTRICAL RISER NO SCALE

ELECTRICAL LOADS

GENERAL LIGHTING, SM.APPL. 7 LAUNDRY	8,205VA
HEAT @ 65%, A./C @ 100% *	5,800 VA
APPLIANCE DEMAND LOAD	14, 777 VA
DRYER DEMAND LOAD	5,000 VA
RANGE DEMAND LOAD	14,350 VA
SERVICE DEMAND	28,733 VA
DEMAND LOAD	120 A
NEUTRAL DEMAND	90 A
MIN. SERVICE REQUIRED	125 A

EXISTING BREAKER PANEL HAS 125 A BREAKER

*NO HEATING ELEMENT AT THIS TIME

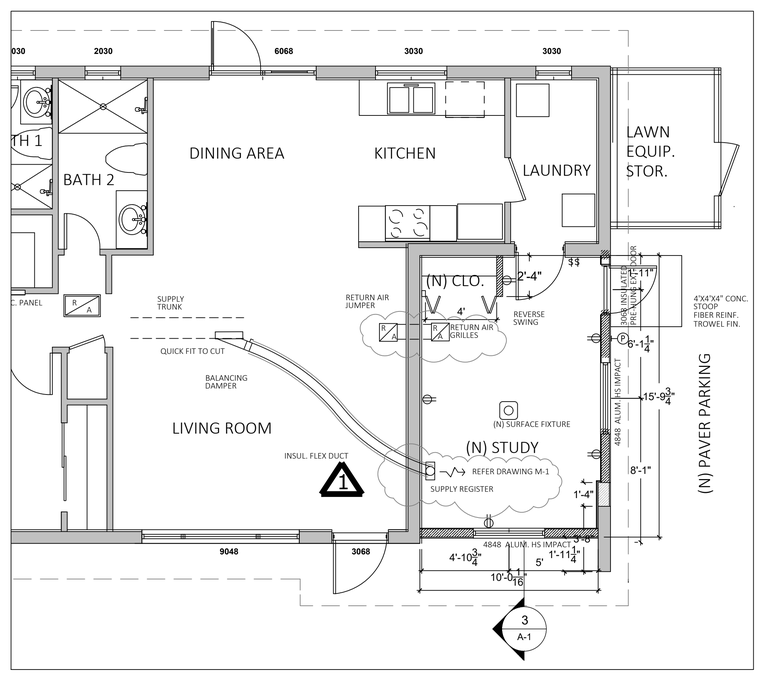

11 A–1 PARTIAL FLOOR PLAN - HVAC SCALE ¼" = 1'-0"

NOTES

1. GENERAL:

A. ALL WORK AND MATERIALS SHALL BE EXECUTED IN ACCORDANCE WITH THE CURRENT EDITIONS OF THE FOLLOWING CODES AS ADOPTED BY THE LOCAL GOVERNMENT HAVING AUTHORITY.
NATIONAL ELECTRICAL CODE (NEC) 2017 (NFTA 70)
FLORIDA BUILDING CODE 7TH EDITION 2020
APPLICABLE COUNTY CODES AND COUNTY ORDINANCES

2.. SCOPE OF WORK

A. WORK SHALL PROCEED BY THE CONTRACTOR'S SCHEDULE. WITH REQUIRED INSPECTIONS BY CITY OF DELRAY BEACH, FL.

B. THE GENERAL CONTRACTOR AND THE SUBCONTRACTORS WILL PROVIDE ALL NECESSARY DOCUMENTATION OF DISCOVERIES UNFORESEEN AS WORK PROGRESSES. WHERE CONFLICTS ARE FOUND IN EXISTING CONDITIONS AND THE CONSTRUCTION DOCUMENTS, THE SUBCONTRACTOR SHALL NOTIFY THE G.C. IMMEDIATELY. RESOLUTION TO CONFLICTS SHALL BE ADDRESSED IN A TIMELY MANNER IN ORDER TO FACILITATE A CONTINUED WORK SCHEDULE.

C. ALL SUBCONTRACTORS SHALL PROVIDE EXPERIENCED PERSONNEL TO COMPLETE THEIR PORTION OF THE WORK. THE SUBCONTRACTOR IS RESPONSIBLE FOR INDIVIDUAL CONDUCT OF THE PERSONNEL AT THIS SITE.

D. THE WORK INCLUDES THE ENCLOSURE OF AN EXISTING CARPORT AT THE WEST END OF THE EXISTING RESIDENCE. THE ENCLOSURE WILL HAVE A MONOLITHIC CONCRETE FOUNDATION AND WOOD FRAME CONSTRUCTION. ELECTRICAL WORK IS SHOWN ON DRAWING T-1. NO PLUMBING IS ANTICIPATED BEYOND WHAT EXIST.

E. EACH SUBCONTRACTOR SHALL PROVIDE LABOR AND MATERIALS TO COMPLETE THE SCOPE OF THEIR WORK. AN AS-BUILT MARKED UP PLAN SHALL BE PROVIDED TO THE G.C. AT THE COMPLETION OF WORK INDICATING, E.G., FINAL ELECTRICAL CIRCUITS AND SWITCHING, AND OVERLOAD DEVICE SPECIFICATIONS..

F. DUST CONTROL & CLEAN-UP: PROVIDE DUST CONTROL FOR ADJACENT INSTALLED A/C SYSTEMS DURING THE WORK PERIOD. INSPECT THE SITE DAILY FOR SCRAP, DEBRIS, AND CUT MATERIALS. MAINTAIN THE SITE IN A NEAT AND ORDERLY CONDITION AT THE END OF WORK DAY. SECURE MATERIALS AND TOOLS.

EXISTING A/C EQUIPMENT

A FORCED AIR CONDITIONING, DIRECT EXPANSION PACKAGED SYSTEM, BY GOODMAN COMPANY.
MODEL # GPC1436H41DD
14 SEER HORIZONTAL FLOW
208-230 / 1 / 60
REFRIGERANT TYPE R-410A
OUTDOOR
COMPRESSOR STAGES: SINGLE

ALL MANUAL J AND ENERGY CALCULATIONS BY AIR CONDITIONING CONTRACTOR.

REFER TO CALCULATIONS & DRAWING M-1 BY PROCALCS

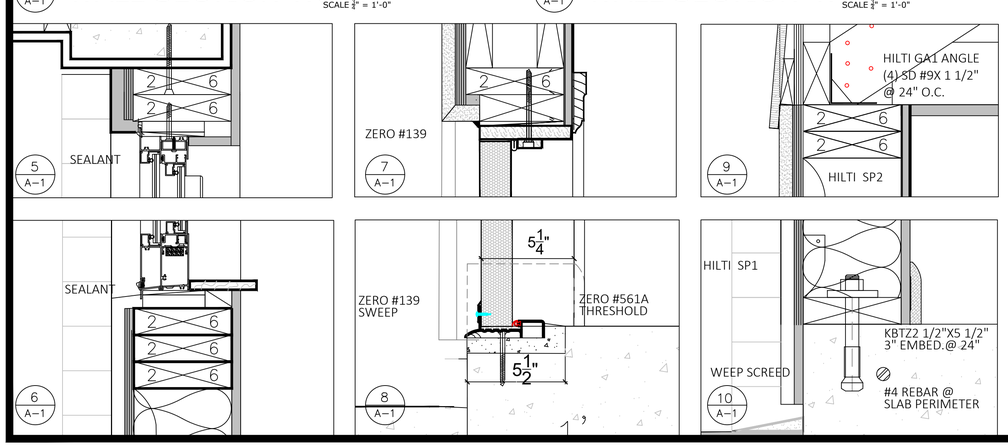

General Notes

Revisions

No.		Date
1	MOD. A/C NOTES	9–27–21

PATRICK J. FITZGEARL GARAGE ENCLOSURE
2138 SW 12TH CT.
DELRAY BEACH, FL 33445

Seal

STATE OF FLORIDA KENNETH SYE BALLEW AR14072 REGISTERED ARCHITECT

Firm Name and Address

KENNETH BALLEW, ARCHITECT
2976 NORWAY PINE LANE
LANTANA, FL. 33462
FLORIDA LIC. AR 0014072

Project Name and Address

PATRICK J. FITZGEARL
2138 SW 12TH CT.
DELRAY BEACH, FL
33445

Project	Sheet
Date 6–1–21	A-1
Scale VARIES	

FNAME REVDATE USER