DELRAY CENTRAL

DELRAY BEACH, FLORIDA

LOCATION MAP. N.T.S.

MASTER PLAN RE-SUBMITTAL
04/28/2022

LIST OF DRAWINGS

SHEET NUMBER	SHEET TITLE
ARCHITECTURE: GENERAL	
A0.00	COVER SHEET
ARCHITECTURE: SURVEY	
1	TITLE SURVEY
2	TITLE SURVEY
3	TITLE SURVEY
4	TITLE SURVEY
5	TITLE SURVEY
ARCHITECTURE: SITE	
AS1.00	MASTER PLAN
AS1.10	PARTIAL SITE PLAN
AS1.11	PARTIAL SITE PLAN
AS1.12	PARTIAL SITE PLAN
AS1.13	PARTIAL SITE PLAN
AS1.20	OPEN SPACE PLAN
AS1.30	PLANNED MOBILITY/VICINITY MAP
AS1.40	PHOTOMETRICS PLAN
AS1.50	SITE DETAILS
ARCHITECTURE: PLANS	
A1.01	GROUND FLOOR
A1.02	SECOND FLOOR
A1.03	THIRD FLOOR
A1.04	FOURTH FLOOR
A1.05	FIFTH FLOOR
A1.06	SIXTH FLOOR
A1.07	SEVENTH FLOOR
A1.08	EIGHTH FLOOR
A1.09	ROOF PLAN
ARCHITECTURE: ELEVATIONS	
A3.00	ELEVATIONS
A3.10	ELEVATIONS
A3.20	BUILDING SECTIONS
A4.00	EXTERIOR RENDERINGS
A4.01	EXTERIOR RENDERINGS
A4.02	EXTERIOR RENDERINGS
A4.03	INTERIOR COURTYARD RENDERINGS
CIVIL	
1	DEMOLITION PLAN
2	MASTER PRELIMINARY ENGINEERING PLAN
3	PRELIMINARY ENGINEERING PLAN
4	PRELIMINARY ENGINEERING PLAN
5	PRELIMINARY ENGINEERING PLAN
6	PRELIMINARY ENGINEERING PLAN
7	PAVEMENT, MARKING, SIGNAGE AND GEOMETRY PLAN
8	PAVEMENT, MARKING, SIGNAGE AND GEOMETRY PLAN
9	PAVEMENT, MARKING, SIGNAGE AND GEOMETRY PLAN
10	PAVEMENT, MARKING, SIGNAGE AND GEOMETRY PLAN
11	CONSTRUCTION DETAILS
12	DRAFT COMPOSITE UTILITY PLAN
LANDSCAPE	
TD-1	TREE DISPOSITION PLAN
TD-2	TREE DISPOSITION PLAN
TD-3	TREE DISPOSITION PLAN
TD-4	TREE DISPOSITION PLAN
TD-5	TREE DISPOSITION PLAN
TD-6	TREE DISPOSITION LIST
LP-1	LANDSCAPE PLAN
LP-2	LANDSCAPE PLAN
LP-3	LANDSCAPE PLAN
LP-4	LANDSCAPE PLAN
LP-5	LANDSCAPE PLAN
LP-6	PLANTING SCHEDULE AND DETAILS
LP-7	LANDSCAPE DETAILS

CLIENT:
GROVER CORLEW
1499 W PALMETTO PARK RD
BOCA RATON, FL 33486
PH: 954.516.7002

ARCHITECT:
RLC ARCHITECTS, P.A.
14 SOUTHEAST 4TH STREET
BOCA RATON, FL 33432
PH: 561.393.6555
FAX: 561.395.0007

***CIVIL ENGINEERING (BY OWNER):**
SCHNARS ENGINEERING CORP.
947 CLINT MOORE RD
BOCA RATON, FL 33487
PH: 561.241.5182
FAX: 561.241.5182

LANDSCAPE (BY OWNER)=
ARCHITECTURAL ALLIANCE LANDSCAPE
612 SW 4TH AVE
FT. LAUDERDALE, FL 33315
PH: 954.764.8858

SITE PLAN
RE-SUBMITTAL
04/28/2022

RLC Architects
14 SE 4th Street, Boca Raton, FL 33432
561.393.6555 Fax: 561.395.0007
Web www.rlcarchitects.com

COPYRIGHT RLC ARCHITECTS, P.A. 2017
STATE OF FLORIDA REGISTERED ARCHITECTS No. AA26001060
THE DRAWINGS AND ALL THE IDEAS, ARRANGEMENTS, DESIGNS AND PLANS INDICATED OR REPRESENTED BY THESE DRAWINGS AND PLANS ARE AND REMAIN THE PROPERTY OF RLC ARCHITECTS, P.A. AND NO PART THEREOF SHALL BE USED FOR ANY PURPOSE OTHER THAN THE SPECIFIC PROJECT FOR WHICH THEY WERE PREPARED AND DEVELOPED, NOR SHALL ANY PART THEREOF BE DISCLOSED TO OTHERS FOR ANY PURPOSE WHATSOEVER EXCEPT WITH THE SPECIFIC WRITTEN PERMISSION OF RLC ARCHITECTS, P.A.

STATE OF FLORIDA
2022-04-28 12:07:22-04:00
AR0009566
LICENSED ARCHITECT
BRUCE W. RETZSCH

CONSULTANT INFO/LOGO

DELRAY CENTRAL MASTER PLAN
1625 SOUTH CONGRESS

REVISIONS

Drawing Title
MASTER PLAN

Scale
Project No. 20112.00
Plot Date 04/28/2022

Principal: JC
Project Director:
Project Manager:
Drafted by: MGC
Checked by:

Sheet No.
A0.00

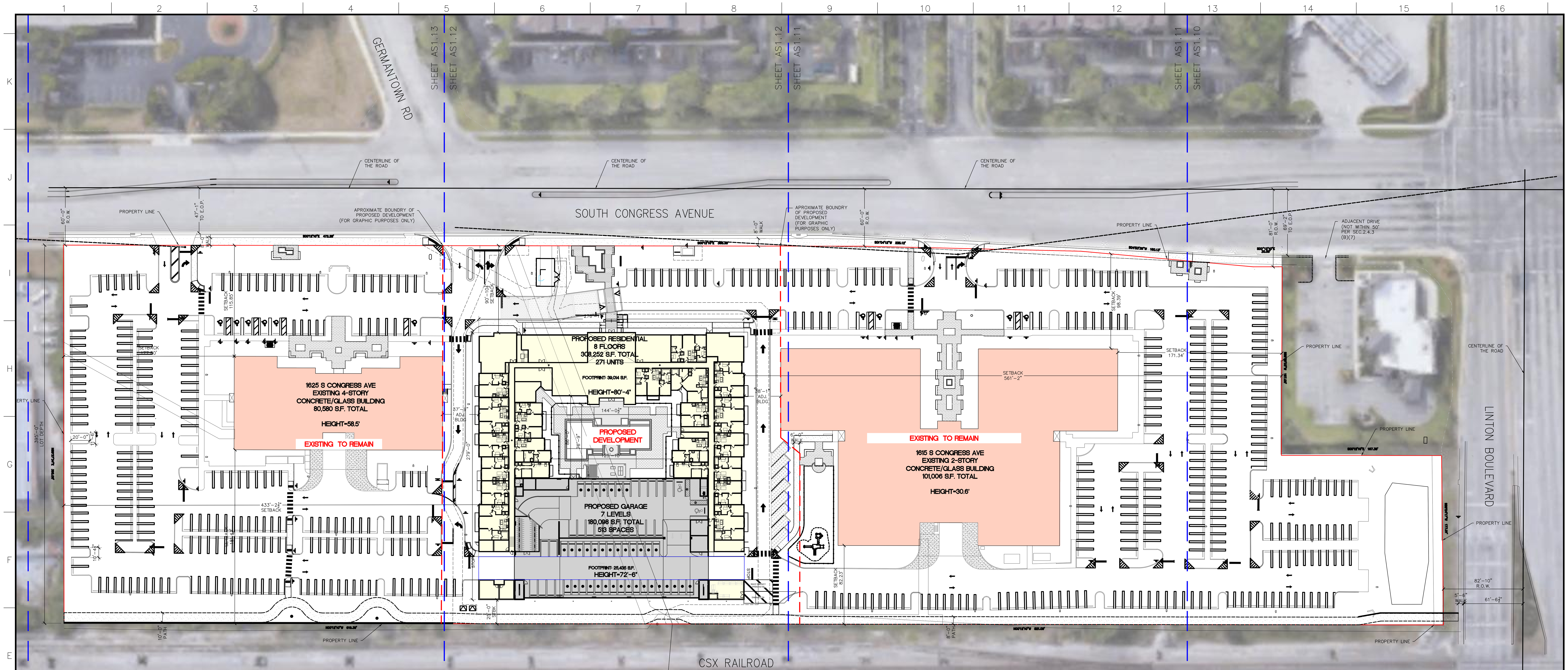

1 MASTER PLAN

AS1.00 SCALE: 1"=50'-0"

MASTER SITE PLAN DATA

PROJECT DESCRIPTION	A PARCEL OF LAND IN SECTION 6, TOWNSHIP 47 SOUTH, RANGE 43 EAST, PALM BEACH COUNTY, FLORIDA			
PROJECT LOCATION	1625 SOUTH CONGRESS AVENUE AND LINTON BOULEVARD, DELRAY BEACH, FLORIDA			
LEGAL DESCRIPTION	*THE GARDENS AT CENTRE DELRAY*	*PLAT BOOK 42, PAGE 133*		
	THE ATRIUM AT CENTRE DELRAY	*PLAT BOOK 43, PAGE 847*		
EXISTING ZONING	MROC			
PROPOSED ZONING	MROC			
EXISTING USE	OFFICE			
PROPOSED USE	MULTI-FAMILY			
SITE AREA	**12.135 ACRES**			
	528,601 S.F.			

	CODE SECTION			COVERAGE (S.F.)	FLOOR AREA (S.F.)
BUILDING AREAS	SEC. 10.4.3 (DEFINITION)	EXISTING BUILDINGS TO REMAIN	1625 S CONGRESS AVE (OFFICE)	18,675	80,580
			1615 S CONGRESS AVE (OFFICE	51,580	101,006
			TOTAL EXISTING	**70,255**	**181,586**
		PROPOSED	PROPOSED MULTI FAMILY	37,919	307,251
			PROPOSED COMMERCIAL (AT RESIDENTIAL GROUND FL)	1,095	1,095
			PROPOSED PARKING GARAGE	25,435	180,098
			TOTAL PROPOSED	**64,449**	**488,444**
			TOTAL BUILDING AREA	**134,704**	**670,030**

DEVELOPMENT REGULATION	CODE SECTION	DISTRICT				
BUILDING HEIGHT	SEC. 4.4.29 G(2)f	MROC	MAX. ALLOWABLE			85 FT
			EXISTING OFFICE	1625 S CONGRESS AVE (OFFICE)		58.5 FT
				1615 S CONGRESS AVE (OFFICE		30.6 FT
				PROPOSED RESIDENTIAL		80 FT 4 IN
F.A.R.	FUTURE LAND USE COMPREHENSIVE PLAN, P. FL-41	CONGRESS AVENUE MIXED USE	MAXIMUM F.A.R. ALLOWABLE		2.50	
			EXISTING OFFICE		0.34	
			PROPOSED RESIDENTIAL/GARAGE		0.92	
			TOTAL F.A.R. PROPOSED		1.27	
DENSITY	SEC. 4.4.29 B(4)c	MROC	MAX. ALLOWABLE		40 UNITS/ACRE	
			REQUESTED		22.33 UNITS/ACRE	
INTESITY	SEC. 4.4.29 G(1())a & SEC. 4.4.29 G(1)c & SEC. 4.3.4. (F)2	MROC			**PERCENT**	**AREA (SF)**
			OFFICE	MAX. ALLOWABLE*	100%	670,030
				EXISTING	27%	181,586
			MULTI-FAMILY	MAX. ALLOWABLE*	75%	502,523
				PROPOSED	38.05%	254,959 **
			ALLOWABLE RESIDENTIAL AREA REMAINING		36.95%	247,564
ROOF COVERAGE	STAIRWELLS AND ELEVATOR SHAFT		PROPOSED		2.44%	980

(*) MAXIMUM ALLOWABLE INTENSITY IS BASED ON EXISTING OFFICE AND PROPOSED MULTI STORY AREAS
(**) PER SEC. 4.3.4. (F)2 THE FLOOR AREA SHALL BE THE NET LIVING AREA FOR EACH UNIT WITHIN THE STRUCTURE EXCLUSIVE OF BALCONIES, DECKS, PORCHES, AND COMMON AREAS SUCH AS CORRIDORS, LOBBIES, ETC.

NOTE: THE PROPOSED PARKING GARAGE IS INCLUDED IN OVERALL DEVELOPMENT AREA

PERCENTAGE OF PLOT COVERED	SEC. 4.4.29 G(2)c	MROC			**PERCENT**	**S.F.**
			MAX. ALLOWABLE		75%	396,450.45
			PROPOSED (OFFICE AND RESIDENTIAL)		71.04%	375,542.60
BUILDING SEPERATION	SEC. 4.4.29 G(2)(g)5	MROC	MIN. ALLOWABLE			25 FT
			PROVIDED			
			SEPERATION BETWEEN	1615 S CONGRESS AVE (OFFICE / PROPOSED MULTI FAMILY		38.08 FT
				1625 S CONGRESS AVE (OFFICE) / PROPOSED MULTI FAMILY		37.75 FT
SETBACKS	SEC. 4.4.29 G(2)g	MROC	**REQUIRED**			
			CONGRESS AVENUE FRONTAGE			10 FT MIN/ 20 FT MAX
			SIDE YARD			15 FT/25 FT* MIN
			ADJACENT TO CSX RAILWAY (REAR)			25 FT MIN
			PROVIDED			
			1615 S CONGRESS	FRONT (FACING CONGRESS AVE)		98.39 FEET
				SIDE (FACING LINTON BLVD)		171.34 FEET
				SIDE (FACING SOUTH)		748.90 FEET
				REAR (FACING CSX RAILWAY)		82.23 FEET
			1625 S CONGRESS	FRONT (FACING CONGRESS AVE)		115.85 FEET
				SIDE (FACING LINTON BLVD)		876.17 FEET
				SIDE (FACING SOUTH)		177.80 FEET
				REAR (FACING CSX RAILWAY)		181.43 FEET
			PROPOSED (MULTI-FAMILY BUILDING/GARAGE)	FRONT (FACING CONGRESS AVE)		90.88 FEET
				SIDE (FACING SOUTH)		433.20 FEET
				SIDE (FACING LINTON BLVD)		561.16 FEET
				REAR (FACING CSX RAILWAY)		25 FEET
		(*) PER SEC 4.4.29 G(2)g3 PERIMETER DEVELOPMENT BUFFERS TO A MAX HEIGHT OF 42 FT. THEREAFTER ADDITION SETBACKS FOR THE BUILDING EXCEEDING 42 FT SHALL BE A MINIMUM OF 10 ADDITIONAL FEET				
LOT DIMENSIONS	SEC. 4.3.4 (D)	BASE DISTRICT STANDARDS	LOT DEPTH		REQUIRED	PROPOSED
					N/A	395'-0"
PERIMETER DEVELOPMENT/LANDSCAPE BUFFER	SEC. 4.4.29 G(2)d	MROC			REQUIRED	MIN. PROVIDED
			ADJACENT TO CONGRESS		15 FT	15 FT
			ALL OTHER PERIMETERS		15 FT	7 FT
			ADJACENT TO CSX RAILWAY		25 FT	15.14 FT
OPEN SPACE	SEC. 4.4.29 G(2)c	MROC			**PERCENT**	**S.F.**
			MIN. REQUIRED		25.00%	132,150
			PROVIDED		25.11%	132,733 *

(*)PER SEC. 4.4.29.(G)(2)(C)2 LANDSCAPE AREAS REQUIRED TO MEET INTERNAL PARKING LOT DESIGN REQUIREMENTS, BODIES OF WATER AND PAVED AREAS ARE NOT INCLUDED IN THE OPEN SPACE CALCULATIONS. HOWEVER, PERIMETER LANDSCAPE AND INTERNAL LANDSCAPE AREAS **NOT** REQUIRED FOR INTERNAL LOT DESIGN REQUIREMENTS ARE INCLUDED.

PARKING REQUIRED

EXISTING OFFICE BUILDINGS TO REMAIN				
SEC. 28-1865 (n)	NET AREA (S.F.)	REQUIREMENT PER S.F. OF NET OFFICE		SPACES REQUIRED
1615 S CONGRESS	98,666	4 PER 1,000 SF UP TO 3,000 SF		12
		3.5 SPACES PER 1,000 SF. THEREAFTER		335
		PARKING REQUIRED THIS BUILDING		347
1625 S CONGRESS	79,560	4 PER 1,000 SF UP TO 3,000 SF		12
		3.5 SPACES PER 1,000 SF. THEREAFTER		268
		PARKING REQUIRED THIS BUILDING		280
		SUB-TOTAL REQUIRED PARKING		627
PROPOSED RESIDENTIAL AND GROUND FLOOR COMMERCIAL				
CODE SECTION	SEC. 4.4.29 H			
MULTI-FAMILY UNITS	TYPE OF UNIT	AMOUNT OF TYPE	SPACES PER TYPE	SPACES REQUIRED
	1 BEDROOM	136	AT 1.25 SPACES	170
	2 BEDROOM	121	AT 2 SPACES	242
	3 BEDROOM	14	AT 2 SPACES	28
	GUEST (UP TO 20 UNITS)	AT . 5 FOR FIRST 20 UNITS.		10
	GUEST (21-50 UNITS)	AT . 3 BETWEEN 21 AND 50 UNITS.		9
	GUEST (OVER 50 UNITS)	AT . 2 OVER 50 UNITS.		45
	SUB-TOTAL REQUIRED PARKING			504 *
COMMERCIAL (GROUND FLOOR OF RESIDENTIAL)	1,095 S.F.	4.5 PER 1,000 SF OF GROSS FLOOR AREAS		5
	SUB-TOTAL REQUIRED PARKING			5 **
(*)60% OF THE OFF-STREET PARKING REQUIREMENT PER PER SEC 4.6.9 C(8)a*				140
(**)90% OF THE OFF-STREET PARKING REQUIREMENT PER PER SEC 4.6.9 C(8)a*				4
RESERVED RESIDENTIAL PARKING				271
TOTAL PARKING REQUIRED (EXISTING + PROPOSED RESIDENTIAL)				1042
TOTAL HANDICAP REQUIRED (PER TABLE 208.2 OF THE 2010 F.B.C. - ACCESSIBILITY)				
2% OF TOTAL PROPOSED PARKING				22
(*) REFER TO SHARED PARKING CALCULATIONS TABLE FOR REDUCTION IN REQUIRED PARKING				
BICYCLE PARKING				
CODE SECTION	SEC. 4.6.9.C(1)c	AMOUNT OF TYPE (UNITS)	SPACES PER TYPE	
TYPE I (SHORT TERM)		271	1 PER 25 UNITS	11
TYPE II (LONG TERM)			0.25 SPACES PER UNIT	68
TOTAL BICYCLE PARKING				79

PROPOSED PARKING

SURFACE PARKING		STANDARD (9' x 18')	COMPACT (8' x 16')	HANDICAPPED (12' x 18')	TOTAL
SURFACE PARKING	PARCEL 1 (1615 S CONG.)	140	149	4	293
	PARCEL 2 (1625 S CONG.)	110	136	6	252
TOTAL SURFACE PARKING		250	285	10	545

PROPOSED OPEN GARAGE PARKING — LEVEL	STANDARD (9' x 18')	COMPACT (8' x 16')	HANDICAPPED (12' x 18')	TOTAL PARKING PER FLOOR
1ST FLOOR	22	37	2	61
2ND FLOOR	73	0	2	75
3RD FLOOR	73	0	2	75
4TH FLOOR	73	0	2	75
5TH FLOOR	73	0	2	75
6TH FLOOR	74	0	1	75
7TH FLOOR	76	0	1	77
SUB-TOTAL PROPOSED PARKING	464	37	12	513
TOTAL PROPOSED PARKING (SURFACE + GARAGE)	714	322	22	1058

(**) SURFACE PARKING AND GARAGE PARKING TO BE SHARED BETWEEN PROPOSED RESIDENTIAL AND EXISTING OFFICES

BICYCLE PARKING	
LONG TERM (AT PARKING GARAGE)	68
SHORT TERM (THROUGHOUT THE SITE)	11
TOTAL BICYCLE PARKING	79

SHARED PARKING CALCULATIONS TABLE PER SEC 4.6.9 C(8)a

USE	BASIC PARKING REQUIRED	WEEKDAY NIGHT 12AM - 6AM	WEEKDAY DAY 9 AM - 4 PM	WEEKDAY EVENING 6PM-12AM	WEEKEND DAY 9AM-4PM	WEEKEND EVENING 8PM-12AM
RESIDENTIAL	233	233	140	210	186	210
OFFICE	627	32	627	63	63	32
COMMERCIAL	5	1	4	5	5	4
OTHER	271	271	271	271	271	271
TOTAL PARKING REQUIRED	1136	537	1042	548	525	517

NORTH

SITE PLAN
RE-SUBMITTAL
04/28/2022

RLC Architects
14 SE 4th Street, Boca Raton, FL 33432
Tel 561 393 6555 Fax 561 395 0007
Web www.rlcarchitects.com

COPYRIGHT RLC ARCHITECTS, P.A. 2017
STATE of FLORIDA REGISTERED ARCHITECTS No. AA26001060
THE DRAWINGS AND ALL THE IDEAS, ARRANGEMENTS, DESIGNS AND PLANS INDICATED THEREON OR REPRESENTED THEREBY ARE OWNED BY AND REMAIN THE PROPERTY OF RLC ARCHITECTS, P.A. AND NO PART THEREOF SHALL BE UTILIZED BY ANY PERSON, FIRM OR CORPORATION FOR ANY PURPOSE WHATSOEVER EXCEPT WITH THE SPECIFIC WRITTEN PERMISSION OF RLC ARCHITECTS, P.A.

STATE OF FLORIDA · BRUCE W. RETZSCH · AR0009566 · REGISTERED ARCHITECT
2022.04.27 12:07:27-04'00'
BRUCE W. RETZSCH

CONSULTANT INFO/LOGO

DELRAY CENTRAL MASTER PLAN
1625 SOUTH CONGRESS

REVISIONS

Drawing Title
MASTER PLAN

Scale
Project No. 20112.00
Plot Date 04/28/2022

Principal: JC
Project Director:
Project Manager:
Drafted by: MGC
Checked by:

Sheet No.
AS1.00

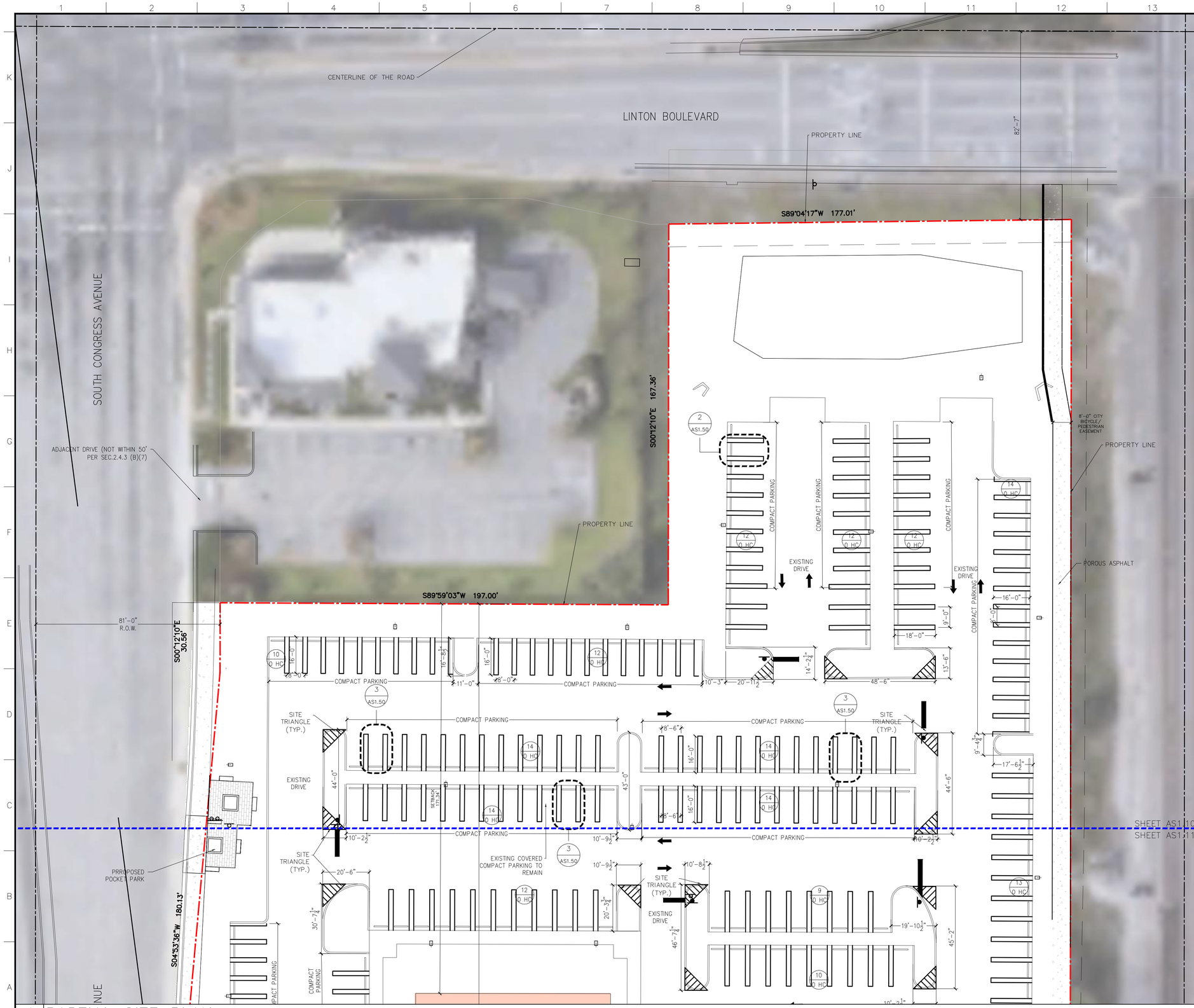

1 PARTIAL SITE PLAN

AS1.10 SCALE: 1"=20'-0"

PARKING REQUIRED

EXISTING OFFICE BUILDINGS TO REMAIN

SEC. 28-1865 (n)	NET AREA (S.F.)	REQUIREMENT PER S.F. OF NET OFFICE	SPACES REQUIRED
1615 S CONGRESS	98,666	4 PER 1,000 SF UP TO 3,000 SF	12
		3.5 SPACES PER 1,000 SF. THEREAFTER	335
		PARKING REQUIRED THIS BUILDING	347
1625 S CONGRESS	79,560	4 PER 1,000 SF UP TO 3,000 SF	12
		3.5 SPACES PER 1,000 SF. THEREAFTER	268
		PARKING REQUIRED THIS BUILDING	280
		SUB-TOTAL REQUIRED PARKING	627

PROPOSED RESIDENTIAL AND GROUND FLOOR COMMERCIAL

CODE SECTION	SEC. 4.4.29 H			
	TYPE OF UNIT	AMOUNT OF TYPE	SPACES PER TYPE	SPACES REQUIRED
MULTI-FAMILY UNITS	1 BEDROOM	136	AT 1.25 SPACES	170
	2 BEDROOM	121	AT 2 SPACES	242
	3 BEDROOM	14	AT 2 SPACES	28
	GUEST (UP TO 20 UNITS)	AT . 5 FOR FIRST 20 UNITS.		10
	GUEST (21-50 UNITS)	AT . 3 BETWEEN 21 AND 50 UNITS.		9
	GUEST (OVER 50 UNITS)	AT .2 OVER 50 UNITS.		45
		SUB-TOTAL REQUIRED PARKING		504 *
COMMERCIAL (GROUND FLOOR OF RESIDENTIAL)	1,095 S.F.	4.5 PER 1,000 SF OF GROSS FLOOR AREAS		5
		SUB-TOTAL REQUIRED PARKING		5 **
(*)60% OF THE OFF-STREET PARKING REQUIREMENT PER PER SEC 4.6.9 C(8)a*				140
(**)90% OF THE OFF-STREET PARKING REQUIREMENT PER PER SEC 4.6.9 C(8)a*				4
RESERVED RESIDENTIAL PARKING				271
TOTAL PARKING REQUIRED (EXISTING + PROPOSED RESIDENTIAL)				1042
TOTAL HANDICAP REQUIRED (PER TABLE 208.2 OF THE 2010 F.B.C. - ACCESSIBILITY)				
2% OF TOTAL PROPOSED PARKING				22

(*) REFER TO SHARED PARKING CALCULATIONS TABLE FOR REDUCTION IN REQUIRED PARKING

BICYCLE PARKING

CODE SECTION	SEC. 4.6.9.C(1)c	AMOUNT OF TYPE (UNITS)	SPACES PER TYPE	
TYPE I (SHORT TERM)		271	1 PER 25 UNITS	11
TYPE II (LONG TERM)			0.25 SPACES PER UNIT	68
			TOTAL BICYCLE PARKING	79

SHARED PARKING CALCULATIONS TABLE PER SEC 4.6.9 C(8)a

USE	BASIC PARKING REQUIRED	WEEKDAY NIGHT 12AM - 6AM	WEEKDAY DAY 9 AM - 4 PM	WEEKDAY EVENING 6PM-12AM	WEEKEND DAY 9AM-4PM	WEEKEND EVENING 8PM-12AM
RESIDENTIAL	233	233	140	210	186	210
OFFICE	627	32	627	63	63	32
COMMERCIAL	5	1	4	5	5	4
OTHER	271	271	271	271	271	271
TOTAL PARKING REQUIRED	1136	537	1042	548	525	517

PROPOSED PARKING

SURFACE PARKING

		STANDARD (9' x 18')	COMPACT (8' x 16')	HANDICAPPED (12' x 18')	TOTAL
SURFACE PARKING	PARCEL 1 (1615 S CONG.)	140	149	4	293
	PARCEL 2 (1625 S CONG.)	110	136	6	252
TOTAL SURFACE PARKING		250	285	10	545

PROPOSED OPEN GARAGE PARKING

LEVEL	STANDARD (9' x 18')	COMPACT (8' x 16')	HANDICAPPED (12' x 18')	TOTAL PARKING PER FLOOR
1ST FLOOR	22	37	2	61
2ND FLOOR	73	0	2	75
3RD FLOOR	73	0	2	75
4TH FLOOR	73	0	2	75
5TH FLOOR	73	0	2	75
6TH FLOOR	74	0	1	75
7TH FLOOR	76	0	1	77
SUB-TOTAL PROPOSED PARKING	464	37	12	513
TOTAL PROPOSED PARKING (SURFACE + GARAGE)	714	322	22	1058

(**) SURFACE PARKING AND GARAGE PARKING TO BE SHARED BETWEEN PROPOSED RESIDENTIAL AND EXISTING OFFICES

BICYCLE PARKING

LONG TERM (AT PARKING GARAGE)	68
SHORT TERM (THROUGHOUT THE SITE)	11
TOTAL BICYCLE PARKING	79

SITE PLAN
RE-SUBMITTAL
04/28/2022

RLC Architects
14 SE 4th Street, Boca Raton, FL 33432
P: 561.395.0225 F: 561.395.0007
Web www.rlcarchitects.com

COPYRIGHT RLC ARCHITECTS, P.A. 2017
STATE OF FLORIDA REGISTERED ARCHITECTS No. AA26001060

THE DRAWINGS AND ALL THE IDEAS, ARRANGEMENTS, DESIGNS AND PLANS INDICATED OR REPRESENTED BY THESE DRAWINGS AND SPECIFICATIONS REMAIN THE PROPERTY OF RLC ARCHITECTS, P.A. AND NO PART THEREOF SHALL BE USED FOR ANY PURPOSE NOT SPECIFICALLY PERTAINING TO THIS PROJECT, NOR FOR ANY OTHER PURPOSE WHATSOEVER EXCEPT WITH THE SPECIFIC WRITTEN PERMISSION OF RLC ARCHITECTS, P.A.

STATE OF FLORIDA
2022-04-28 12:07:30-04'00'
AR0009566
REGISTERED ARCHITECT
BRUCE W. RETZSCH

CONSULTANT INFO/LOGO

DELRAY CENTRAL MASTER PLAN

1625 SOUTH CONGRESS

REVISIONS

Drawing Title
SITE PLAN

Scale
Project No. 20112.00
Plot Date 04/28/2022

Principal: JC
Project Director:
Project Manager:
Drafted by: MGC
Checked by:

Sheet No.
AS1.10

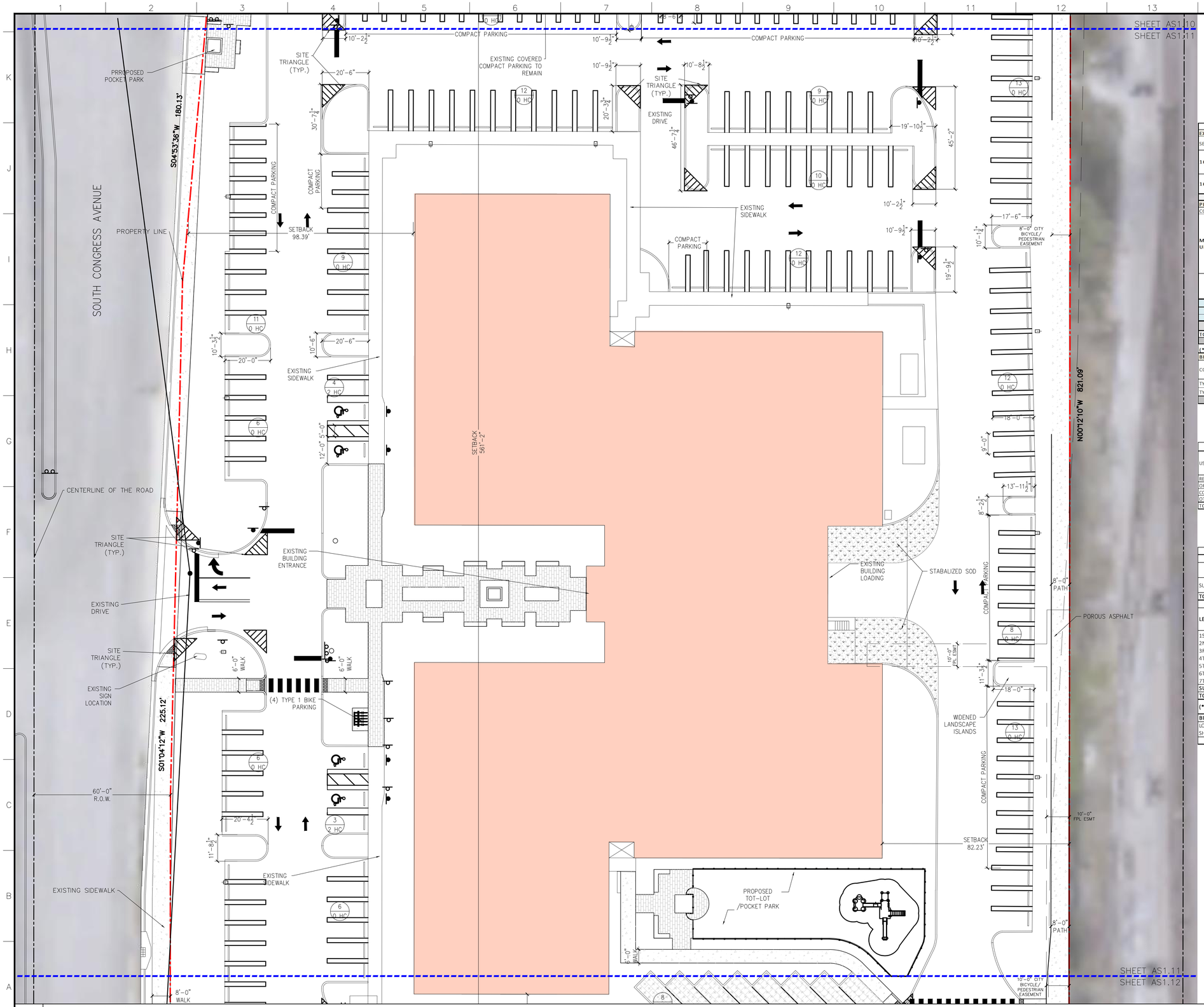

1 PARTIAL SITE PLAN

AS1.11 SCALE: 1"=20'-0"

PARKING REQUIRED

EXISTING OFFICE BUILDINGS TO REMAIN			
SEC. 28-1865 (n)	NET AREA (S.F.)	REQUIREMENT PER S.F. OF NET OFFICE	SPACES REQUIRED
1615 S CONGRESS	98,666	4 PER 1,000 SF UP TO 3,000 SF	12
		3.5 SPACES PER 1,000 SF. THEREAFTER	335
		PARKING REQUIRED THIS BUILDING	347
1625 S CONGRESS	79,560	4 PER 1,000 SF UP TO 3,000 SF	12
		3.5 SPACES PER 1,000 SF. THEREAFTER	268
		PARKING REQUIRED THIS BUILDING	280
		SUB-TOTAL REQUIRED PARKING	627

PROPOSED RESIDENTIAL AND GROUND FLOOR COMMERCIAL				
CODE SECTION	SEC. 4.4.29 H			
	TYPE OF UNIT	AMOUNT OF TYPE	SPACES PER TYPE	SPACES REQUIRED
MULTI-FAMILY UNITS	1 BEDROOM	136	AT 1.25 SPACES	170
	2 BEDROOM	121	AT 2 SPACES	242
	3 BEDROOM	14	AT 2 SPACES	28
	GUEST (UP TO 20 UNITS)	AT . 5 FOR FIRST 20 UNITS.		10
	GUEST (21-50 UNITS)	AT . 3 BETWEEN 21 AND 50 UNITS.		9
	GUEST (OVER 50 UNITS)	AT . 2 OVER 50 UNITS.		45
		SUB-TOTAL REQUIRED PARKING		504 *
COMMERCIAL (GROUND FLOOR OF RESIDENTIAL)	1,095 S.F.	4.5 PER 1,000 SF OF GROSS FLOOR AREAS		5
		SUB-TOTAL REQUIRED PARKING		5 **
(*)60% OF THE OFF-STREET PARKING REQUIREMENT PER PER SEC 4.6.9 C(8)a*				140
(**)90% OF THE OFF-STREET PARKING REQUIREMENT PER PER SEC 4.6.9 C(8)a*				4
RESERVED RESIDENTIAL PARKING				271
TOTAL PARKING REQUIRED (EXISTING + PROPOSED RESIDENTIAL)				1042
TOTAL HANDICAP REQUIRED (PER TABLE 208.2 OF THE 2010 F.B.C. - ACCESSIBILITY)				
2% OF TOTAL PROPOSED PARKING				22

(*) REFER TO SHARED PARKING CALCULATIONS TABLE FOR REDUCTION IN REQUIRED PARKING

BICYCLE PARKING				
CODE SECTION	SEC. 4.6.9.C(1)c	AMOUNT OF TYPE (UNITS)	SPACES PER TYPE	
TYPE I (SHORT TERM)		271	1 PER 25 UNITS	11
TYPE II (LONG TERM)			0.25 SPACES PER UNIT	68
			TOTAL BICYCLE PARKING	79

SHARED PARKING CALCULATIONS TABLE PER SEC 4.6.9 C(8)a

USE	BASIC PARKING REQUIRED	WEEKDAY NIGHT 12AM - 6AM	WEEKDAY DAY 9 AM - 4 PM	WEEKDAY EVENING 6PM-12AM	WEEKEND DAY 9AM-4PM	WEEKEND EVENING 8PM-12AM
RESIDENTIAL	233	233	140	210	186	210
OFFICE	627	32	627	63	63	32
COMMERCIAL	5	1	4	5	5	1
OTHER	271	271	271	271	271	271
TOTAL PARKING REQUIRED	1136	537	1042	548	525	517

PROPOSED PARKING

SURFACE PARKING		STANDARD (9' x 18')	COMPACT (8' x 16')	HANDICAPPED (12' x 18')	TOTAL
SURFACE PARKING	PARCEL 1 (1615 S CONG.)	140	149	4	293
	PARCEL 2 (1625 S CONG.)	110	136	6	252
TOTAL SURFACE PARKING		250	285	10	545

PROPOSED OPEN GARAGE PARKING				
LEVEL	STANDARD (9' x 18')	COMPACT (8' x 16')	HANDICAPPED (12' x 18')	TOTAL PARKING PER FLOOR
1ST FLOOR	22	37	2	61
2ND FLOOR	73	0	2	75
3RD FLOOR	73	0	2	75
4TH FLOOR	73	0	2	75
5TH FLOOR	73	0	2	75
6TH FLOOR	74	0	1	75
7TH FLOOR	76	0	1	77
SUB-TOTAL PROPOSED PARKING	464	37	12	513
TOTAL PROPOSED PARKING (SURFACE + GARAGE)	714	322	22	1058

(**) SURFACE PARKING AND GARAGE PARKING TO BE SHARED BETWEEN PROPOSED RESIDENTIAL AND EXISTING OFFICES

BICYCLE PARKING	
LONG TERM (AT PARKING GARAGE)	68
SHORT TERM (THROUGHOUT THE SITE)	11
TOTAL BICYCLE PARKING	79

SITE PLAN
RE-SUBMITTAL
04/28/2022

RLC Architects
14 SE 4th Street, Boca Raton, FL 33432
P: 561.395.1555 F: 561.395.8007
Web www.rlcarchitects.com

COPYRIGHT RLC ARCHITECTS, P.A. 2017
STATE OF FLORIDA REGISTERED ARCHITECTS No. AA26001060

THE DRAWINGS AND ALL THE IDEAS, ARRANGEMENTS, DESIGNS AND PLANS INDICATED OR REPRESENTED BY THESE DRAWINGS AND SPECIFICATIONS REMAIN THE PROPERTY OF RLC ARCHITECTS, P.A. AND NO PART THEREOF SHALL BE CONVEYED OR DISCLOSED TO OTHERS OR BE USED FOR ANY PURPOSE WHATSOEVER EXCEPT WITH THE SPECIFIC WRITTEN PERMISSION OF RLC ARCHITECTS, P.A.

STATE OF FLORIDA
BRUCE W. RETZSCH
AR0009566
2022.04.28 12:07:32-04'00'

CONSULTANT INFO/LOGO

DELRAY CENTRAL MASTER PLAN

1625 SOUTH CONGRESS

REVISIONS

Drawing Title
SITE PLAN

Scale
Project No. 20112.00
Plot Date 04/28/2022

Principal: JC
Project Director:
Project Manager:
Drafted by: MGC
Checked by:

Sheet No.
AS1.11

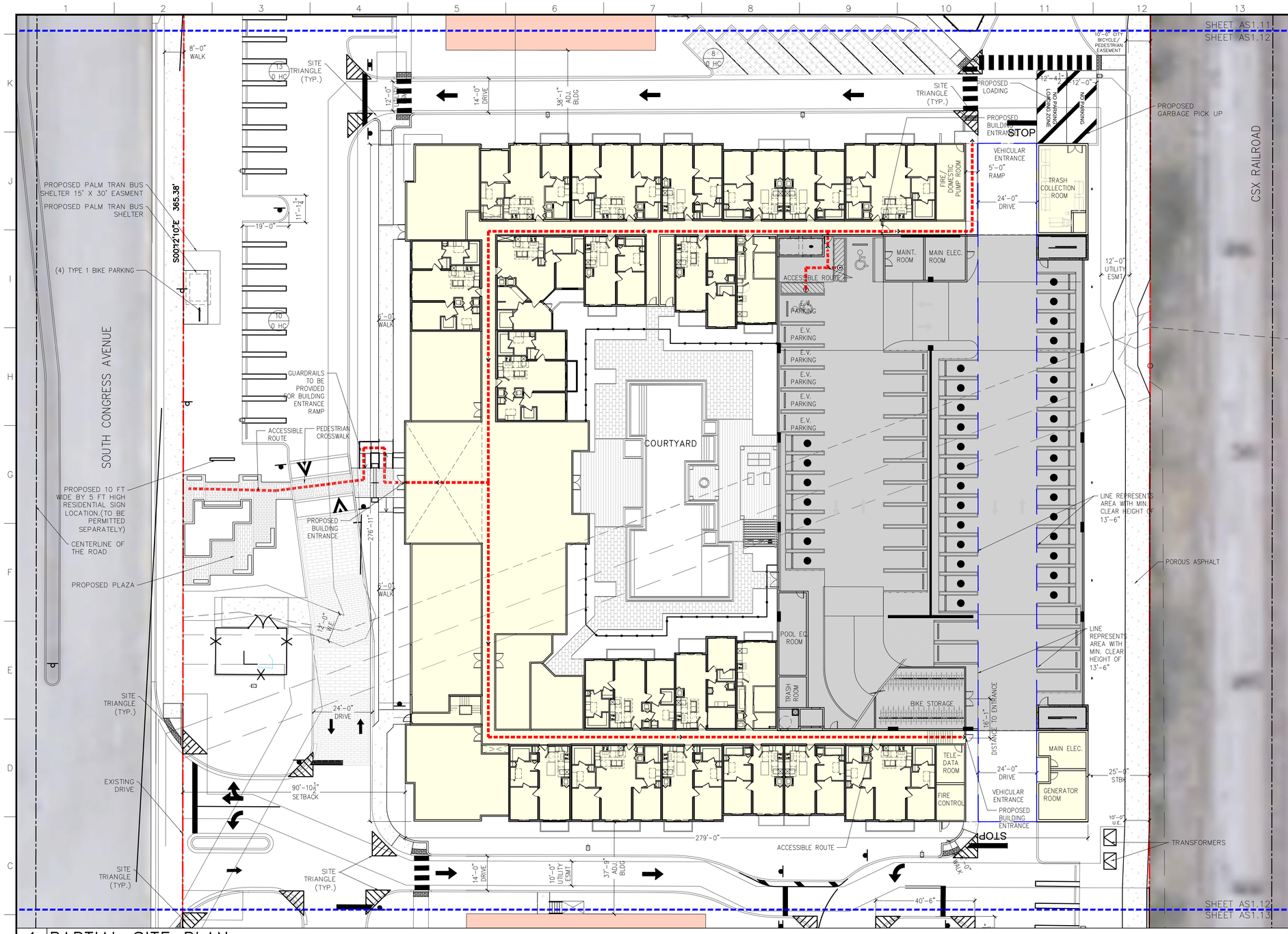

1 PARTIAL SITE PLAN

AS1.12 SCALE: 1"=20'-0"

No. OF BED/BATH	UNIT TYPE	UNIT AREA (S.F.)
JUNIOR 1 BED/1 BATH	JUNIOR A-4	600 S.F.
1 BED / 1 BATH	A1	715 S.F.
	A2	775 S.F.
	A3	865 S.F.
2 BED / 1 BATH	B4	900 S.F.
2 BED / 2 BATH	B1	1,050 S.F.
	B2	1,150 S.F.
	B3	1,150 S.F.
	B3-a	1,130 S.F.
3 BED / 2 BATH	C1	1,390 S.F.

UNIT BREAKDOWN

PROPOSED MULTI FAMILY BLDG. (8 STORY-TOTAL AREA EXCLUDES CORRIDORS, CIRCULATION AND COMPLEMENTARY USES)

LEVEL	NUMBER OF TYPE								TOTAL PER FLOOR (UNITS)	TOTAL AREA PER FLOOR (S.F.)
	1 BED/ 1 BATH		2 BED/ 1 BATH		2 BED/ 2 BATH		3 BED/ 2 BATH			
	NUMBER OF TYPE	TOTAL AREA PER TYPE	NUMBER OF TYPE	TOTAL AREA PER TYPE	NUMBER OF TYPE	TOTAL AREA PER TYPE	NUMBER OF TYPE	TOTAL AREA PER TYPE		
1ST FLOOR	12	8,830 S.F.	0	0 S.F.	9	10,030 S.F.	0	0 S.F.	21	18,860 S.F.
2ND FLOOR	16	12,170 S.F.	1	900 S.F.	15	16,550 S.F.	2	2,780 S.F.	34	32,400 S.F.
3RD FLOOR	18	13,720 S.F.	1	900 S.F.	15	16,550 S.F.	2	2,780 S.F.	36	33,950 S.F.
4TH FLOOR	18	13,720 S.F.	1	900 S.F.	15	16,550 S.F.	2	2,780 S.F.	36	33,950 S.F.
5TH FLOOR	18	13,720 S.F.	1	900 S.F.	15	16,550 S.F.	2	2,780 S.F.	36	33,950 S.F.
6TH FLOOR	18	13,720 S.F.	1	900 S.F.	15	16,550 S.F.	2	2,780 S.F.	36	33,950 S.F.
7TH FLOOR	18	13,720 S.F.	1	900 S.F.	15	16,550 S.F.	2	2,780 S.F.	36	33,950 S.F.
8TH FLOOR	18	13,720 S.F.	1	900 S.F.	15	16,550 S.F.	2	2,780 S.F.	36	33,950 S.F.
TOTALS	136	103,319 S.F.	7	6,300 S.F.	114	125,880 S.F.	14	19,460 S.F.	271 *	254,959 S.F.

WORKFORCE HOUSING UNIT DISTRIBUTION

PER SEC.4.4.29 (B)(4)(c)1 **(55) UNITS** WILL BE WORKFORCE HOUSE UNITS CONSISTING OF MODERATE INCOME WORKFORCE UNITS AS DEFINED BY ARTICLE 4.7 FAMILY/WORKFORCE HOUSING AND WILL COMPLY WITH APPLICABLE SECTIONS OF ARTICLE 4.7.6, 4.7.7, 4.7.8, 4.7.9 AND 4.7.10. RESTRICTIONS SHALL REMAIN IN EFFECT FOR 40 YEARS IN ACCORDANCE WITH LDR SECTION 4.7.9.PER SEC.4.4.29 (B)(4)(c)1

UNIT TYPE	MARKET RATE UNITS		WORKFORCE HOUSING UNITS PROPOSED	
	AMOUNT (UNITS)	% OF MARKET	AMOUNT (UNITS)	% OF W/F
JUNIOR 1 BED/1 BATH	13	5.9%	4	7.3%
1 BED / 1 BATH	96	44.3%	24	44.3%
2 BED / 1 BATH	6	2.6%	1	2.6%
2 BED / 2 BATH	91	42.1%	23	42.1%
3 BED / 2 BATH	11	5.2%	3	5.5%
TOTAL (271) UNITS	**216**	**80%**	**55**	**20%**

PARKING REQUIRED

EXISTING OFFICE BUILDINGS TO REMAIN			
SEC. 28-186S (n)	NET AREA (S.F.)	REQUIREMENT PER S.F. OF NET OFFICE	SPACES REQUIRED
1615 S CONGRESS	98,666	4 PER 1,000 SF UP TO 3,000 SF	12
		3.5 SPACES PER 1,000 SF. THEREAFTER	335
		PARKING REQUIRED THIS BUILDING	347
1625 S CONGRESS	79,560	4 PER 1,000 SF UP TO 3,000 SF	12
		3.5 SPACES PER 1,000 SF. THEREAFTER	268
		PARKING REQUIRED THIS BUILDING	280
		SUB-TOTAL REQUIRED PARKING	627

PROPOSED RESIDENTIAL AND GROUND FLOOR COMMERCIAL				
CODE SECTION	SEC. 4.4.29 H			
	TYPE OF UNIT	AMOUNT OF TYPE	SPACES PER TYPE	SPACES REQUIRED
MULTI-FAMILY UNITS	1 BEDROOM	136	AT 1.25 SPACES	170
	2 BEDROOM	121	AT 2 SPACES	242
	3 BEDROOM	14	AT 2 SPACES	28
	GUEST (UP TO 20 UNITS)	AT . 5 FOR FIRST 20 UNITS.		10
	GUEST (21-50 UNITS)	AT . 3 BETWEEN 21 AND 50 UNITS.		9
	GUEST (OVER 50 UNITS)	AT . 2 OVER 50 UNITS.		45
		SUB-TOTAL REQUIRED PARKING		504 *
COMMERCIAL (GROUND FLOOR OF RESIDENTIAL)	1,095 S.F.	4.5 PER 1,000 SF OF GROSS FLOOR AREAS		5
		SUB-TOTAL REQUIRED PARKING		5 **
(*)60% OF THE OFF-STREET PARKING REQUIREMENT PER PER SEC 4.6.9 C(8)a*				140
(**)90% OF THE OFF-STREET PARKING REQUIREMENT PER PER SEC 4.6.9 C(8)a*				4
RESERVED RESIDENTIAL PARKING				271
TOTAL PARKING REQUIRED (EXISTING + PROPOSED RESIDENTIAL)				1042
TOTAL HANDICAP REQUIRED (PER TABLE 208.2 OF THE 2010 F.B.C. - ACCESSIBILITY)				
2% OF TOTAL PROPOSED PARKING				22

(*) REFER TO SHARED PARKING CALCULATIONS TABLE FOR REDUCTION IN REQUIRED PARKING

BICYCLE PARKING				
CODE SECTION	SEC. 4.6.9.C(1)c	AMOUNT OF TYPE (UNITS)	SPACES PER TYPE	
TYPE I (SHORT TERM)		271	1 PER 25 UNITS	11
TYPE II (LONG TERM)			0.25 SPACES PER UNIT	68
			TOTAL BICYCLE PARKING	79

SHARED PARKING CALCULATIONS TABLE PER SEC 4.6.9 C(8)a

USE	BASIC PARKING REQUIRED	WEEKDAY NIGHT 12AM - 6AM	WEEKDAY DAY 9 AM - 4 PM	WEEKDAY EVENING 6PM-12AM	WEEKEND DAY 9AM-4PM	WEEKEND EVENING 8PM-12AM
RESIDENTIAL	233	233	140	210	186	210
OFFICE	627	32	627	63	63	32
COMMERCIAL	5	1	4	5	5	4
OTHER	271	271	271	271	271	271
TOTAL PARKING REQUIRED	1136	537	1042	548	525	517

PROPOSED PARKING

SURFACE PARKING

		STANDARD (9' x 18')	COMPACT (8' x 16')	HANDICAPPED (12' x 18')	TOTAL
SURFACE PARKING	PARCEL 1 (1615 S CONG.)	140	149	4	293
	PARCEL 2 (1625 S CONG.)	110	136	6	252
TOTAL SURFACE PARKING		250	285	10	545

PROPOSED OPEN GARAGE PARKING

LEVEL	STANDARD (9' x 18')	COMPACT (8' x 16')	HANDICAPPED (12' x 18')	TOTAL PARKING PER FLOOR
1ST FLOOR	22	37	2	61
2ND FLOOR	73	0	2	75
3RD FLOOR	73	0	2	75
4TH FLOOR	73	0	2	75
5TH FLOOR	73	0	2	75
6TH FLOOR	74	0	1	75
7TH FLOOR	76	0	1	77
SUB-TOTAL PROPOSED PARKING	464	37	12	513
TOTAL PROPOSED PARKING (SURFACE + GARAGE)	714	322	22	1058

(**) SURFACE PARKING AND GARAGE PARKING TO BE SHARED BETWEEN PROPOSED RESIDENTIAL AND EXISTING OFFICES

BICYCLE PARKING	
LONG TERM (AT PARKING GARAGE)	68
SHORT TERM (THROUGHOUT THE SITE)	11
TOTAL BICYCLE PARKING	79

SITE PLAN
RE-SUBMITTAL
04/28/2022

RLC Architects
14 SE 4th Street, Boca Raton, FL 33432
Tel 561.395.0225 Fax 561.395.6007
Web www.rlcarchitects.com

COPYRIGHT RLC ARCHITECTS, P.A. 2017
STATE OF FLORIDA REGISTERED ARCHITECTS No. AA26001060
THE DRAWINGS AND ALL THE IDEAS, ARRANGEMENTS, DESIGNS AND PLANS INDICATED OR REPRESENTED BY THESE DRAWINGS AND SPECIFICATIONS REMAIN THE PROPERTY OF RLC ARCHITECTS, P.A AND NO PART THEREOF SHALL BE USED FOR ANY PURPOSE OTHER THAN FOR THE SPECIFIC PURPOSE WHATSOEVER EXCEPT WITH THE SPECIFIC WRITTEN PERMISSION OF RLC ARCHITECTS, P.A.

STATE OF FLORIDA
2022-04-28 12:07:35-04'00'
AR0009566
LICENSED ARCHITECT
BRUCE W. RETZSCH

CONSULTANT INFO/LOGO

DELRAY CENTRAL MASTER PLAN

1625 SOUTH CONGRESS

REVISIONS

Drawing Title
SITE PLAN

Scale
Project No. 20112.00
Plot Date 04/28/2022

Principal: JC
Project Director:
Project Manager:
Drafted by: MGC
Checked by:

Sheet No.
AS1.12

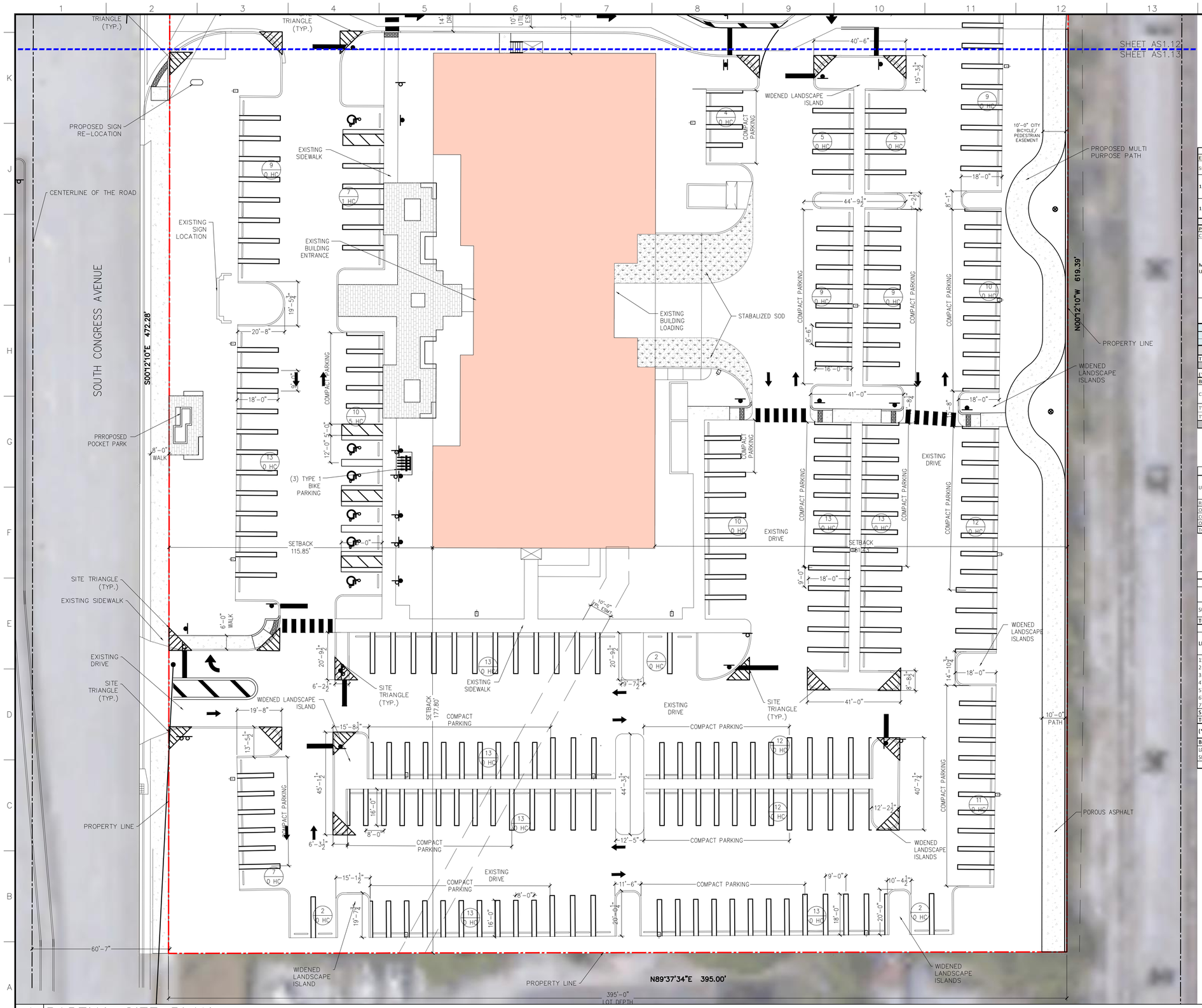

1 PARTIAL SITE PLAN

AS1.13 SCALE: 1"=20'-0"

PARKING REQUIRED				
EXISTING OFFICE BUILDINGS TO REMAIN				
SEC. 28-1865 (n)	NET AREA (S.F.)	REQUIREMENT PER S.F. OF NET OFFICE		SPACES REQUIRED
1615 S CONGRESS	98,666	4 PER 1,000 SF UP TO 3,000 SF		12
		3.5 SPACES PER 1,000 SF. THEREAFTER		335
		PARKING REQUIRED THIS BUILDING		347
1625 S CONGRESS	79,560	4 PER 1,000 SF UP TO 3,000 SF		12
		3.5 SPACES PER 1,000 SF. THEREAFTER		268
		PARKING REQUIRED THIS BUILDING		280
		SUB-TOTAL REQUIRED PARKING		627
PROPOSED RESIDENTIAL AND GROUND FLOOR COMMERCIAL				
CODE SECTION	SEC. 4.4.29 H			
	TYPE OF UNIT	AMOUNT OF TYPE	SPACES PER TYPE	SPACES REQUIRED
MULTI-FAMILY UNITS	1 BEDROOM	136	AT 1.25 SPACES	170
	2 BEDROOM	121	AT 2 SPACES	242
	3 BEDROOM	14	AT 2 SPACES	28
	GUEST (UP TO 20 UNITS)	AT .5 FOR FIRST 20 UNITS.		10
	GUEST (21-50 UNITS)	AT .3 BETWEEN 21 AND 50 UNITS.		9
	GUEST (OVER 50 UNITS)	AT .2 OVER 50 UNITS.		45
		SUB-TOTAL REQUIRED PARKING		504 *
COMMERCIAL (GROUND FLOOR OF RESIDENTIAL)	1,095 S.F.	4.5 PER 1,000 SF OF GROSS FLOOR AREAS		5
		SUB-TOTAL REQUIRED PARKING		5 **
(*)60% OF THE OFF-STREET PARKING REQUIREMENT PER PER SEC 4.6.9 C(8)a*				140
(**)90% OF THE OFF-STREET PARKING REQUIREMENT PER PER SEC 4.6.9 C(8)a*				4
RESERVED RESIDENTIAL PARKING				221
TOTAL PARKING REQUIRED (EXISTING + PROPOSED RESIDENTIAL)				1042
TOTAL HANDICAP REQUIRED (PER TABLE 208.2 OF THE 2010 F.B.C. - ACCESSIBILITY)				
2% OF TOTAL PROPOSED PARKING				22
(*) REFER TO SHARED PARKING CALCULATIONS TABLE FOR REDUCTION IN REQUIRED PARKING				
BICYCLE PARKING				
CODE SECTION	SEC. 4.6.9.C(1)c	AMOUNT OF TYPE (UNITS)	SPACES PER TYPE	
TYPE I (SHORT TERM)		271	1 PER 25 UNITS	11
TYPE II (LONG TERM)			0.25 SPACES PER UNIT	68
			TOTAL BICYCLE PARKING	79

SHARED PARKING CALCULATIONS TABLE PER SEC 4.6.9 C(8)a

USE	BASIC PARKING REQUIRED	WEEKDAY NIGHT 12AM - 6AM	WEEKDAY DAY 9 AM - 4 PM	WEEKDAY EVENING 6PM-12AM	WEEKEND DAY 9AM-4PM	WEEKEND EVENING 8PM-12AM
RESIDENTIAL	233	233	140	210	186	210
OFFICE	627	32	627	63	63	32
COMMERCIAL	5	1	4	5	5	4
OTHER	271	271	271	271	271	271
TOTAL PARKING REQUIRED	1136	537	1042	548	525	517

PROPOSED PARKING					
SURFACE PARKING					
		STANDARD (9' x 18')	COMPACT (8' x 16')	HANDICAPPED (12' x 18')	TOTAL
SURFACE PARKING	PARCEL 1 (1615 S CONG.)	140	149	4	293
	PARCEL 2 (1625 S CONG.)	110	136	6	252
TOTAL SURFACE PARKING		250	285	10	545
PROPOSED OPEN GARAGE PARKING					
LEVEL		STANDARD (9' x 18')	COMPACT (8' x 16')	HANDICAPPED (12' x 18')	TOTAL PARKING PER FLOOR
1ST FLOOR		22	37	2	61
2ND FLOOR		73	0	2	75
3RD FLOOR		73	0	2	75
4TH FLOOR		73	0	2	75
5TH FLOOR		73	0	2	75
6TH FLOOR		74	0	1	75
7TH FLOOR		76	0	1	77
SUB-TOTAL PROPOSED PARKING		464	37	12	513
TOTAL PROPOSED PARKING (SURFACE + GARAGE)		714	322	22	1058
(**) SURFACE PARKING AND GARAGE PARKING TO BE SHARED BETWEEN PROPOSED RESIDENTIAL AND EXISTING OFFICES					
BICYCLE PARKING					
LONG TERM (AT PARKING GARAGE)					68
SHORT TERM (THROUGHOUT THE SITE)					11
TOTAL BICYCLE PARKING					79

SITE PLAN
RE-SUBMITTAL
04/28/2022

RLC Architects
14 SE 4th Street, Boca Raton, FL 33432
P 561.395.0225 F 561.395.6007
Web www.rlcarchitects.com

COPYRIGHT RLC ARCHITECTS, P.A. 2017
STATE OF FLORIDA REGISTERED ARCHITECTS No. AA26001060
THE DRAWINGS AND ALL THE IDEAS, ARRANGEMENTS, DESIGNS AND PLANS INDICATED OR REPRESENTED BY THESE DRAWINGS AND SPECIFICATIONS SHALL REMAIN THE PROPERTY OF RLC ARCHITECTS, P.A. AND NO PART THEREOF SHALL BE USED FOR ANY PURPOSE OTHER THAN THE PROJECT FOR WHICH THEY WERE PREPARED NOR SHALL THEY BE DISCLOSED TO ANY OTHER PERSON OR PURPOSE WHATSOEVER EXCEPT WITH THE SPECIFIC WRITTEN PERMISSION OF RLC ARCHITECTS, P.A.

STATE OF FLORIDA
2022-04-28 12:07:38-04:00
AR0009566
BRUCE W. RETZSCH

CONSULTANT INFO/LOGO

DELRAY CENTRAL MASTER PLAN

1625 SOUTH CONGRESS

REVISIONS

Drawing Title
SITE PLAN

Scale
Project No. 20112.00
Plot Date 04/28/2022

Principal: JC
Project Director:
Project Manager:
Drafted by: MGC
Checked by:

Sheet No.
AS1.13

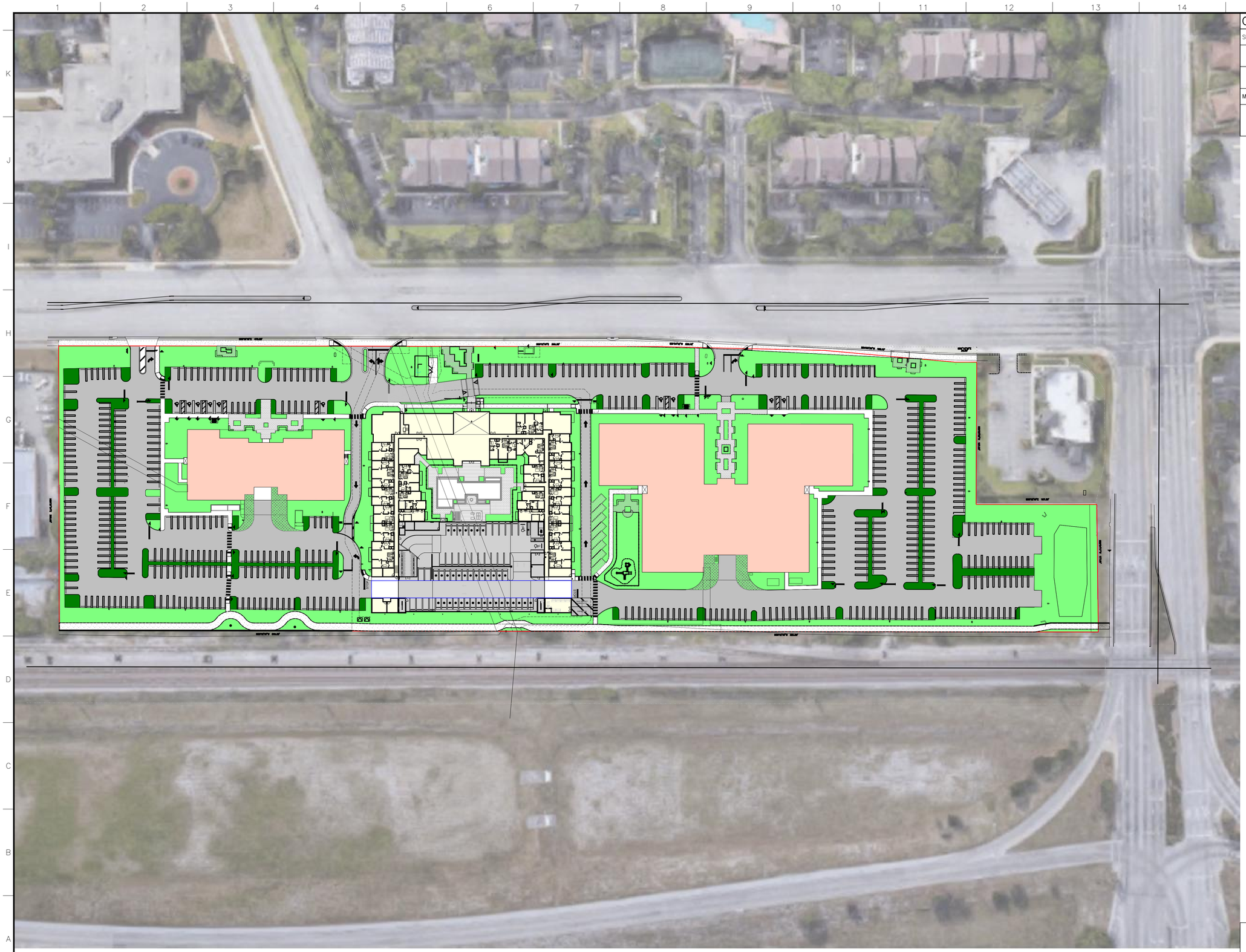

OPEN SPACE LEGEND

SITE AREA			528,601 S.F.
	VEHICULAR USE AREA		200,372 S.F.
	INTERIOR LANDSCAPE REQUIREMENT (10% OF VUA)	10%	20,037 S.F.
MINIMUM OPEN SPACE REQUIRED		25%	132,150 S.F.
	OPEN SPACE AREA	25.11%	132,733 S.F.

1 OPEN SPACE PLAN

AS1.20 SCALE: 1"=60'-0"

SITE PLAN
RE-SUBMITTAL
04/28/2022

RLC Architects
14 SE 4th Street, Boca Raton, FL 33432
Tel 561.395.0225 Fax 561.395.6007
Web www.rlcarchitects.com

COPYRIGHT RLC ARCHITECTS, P.A. 2017
STATE of FLORIDA REGISTERED ARCHITECTS No. AA26001060

THE DRAWINGS AND ALL THE IDEAS, ARRANGEMENTS, DESIGNS AND PLANS INDICATED OR REPRESENTED THEREIN ARE THE PROPERTY OF RLC ARCHITECTS, P.A. AND NO PART THEREOF SHALL BE USED FOR ANY PURPOSE WHATSOEVER EXCEPT WITH THE SPECIFIC WRITTEN PERMISSION OF RLC ARCHITECTS, P.A.

STATE OF FLORIDA
BRUCE W. RETZSCH
AR0009566
LICENSED ARCHITECT
2022.04.28 12:07:42 -04'00'

BRUCE W. RETZSCH

DELRAY CENTRAL MASTER PLAN

1625 SOUTH CONGRESS

REVISIONS

Drawing Title
OPEN SPACE PLAN

Scale
Project No. 20112.00
Plot Date 04/28/2022

Principal: JC
Project Director:
Project Manager:
Drafted by: MGC
Checked by:

Sheet No.
AS1.20

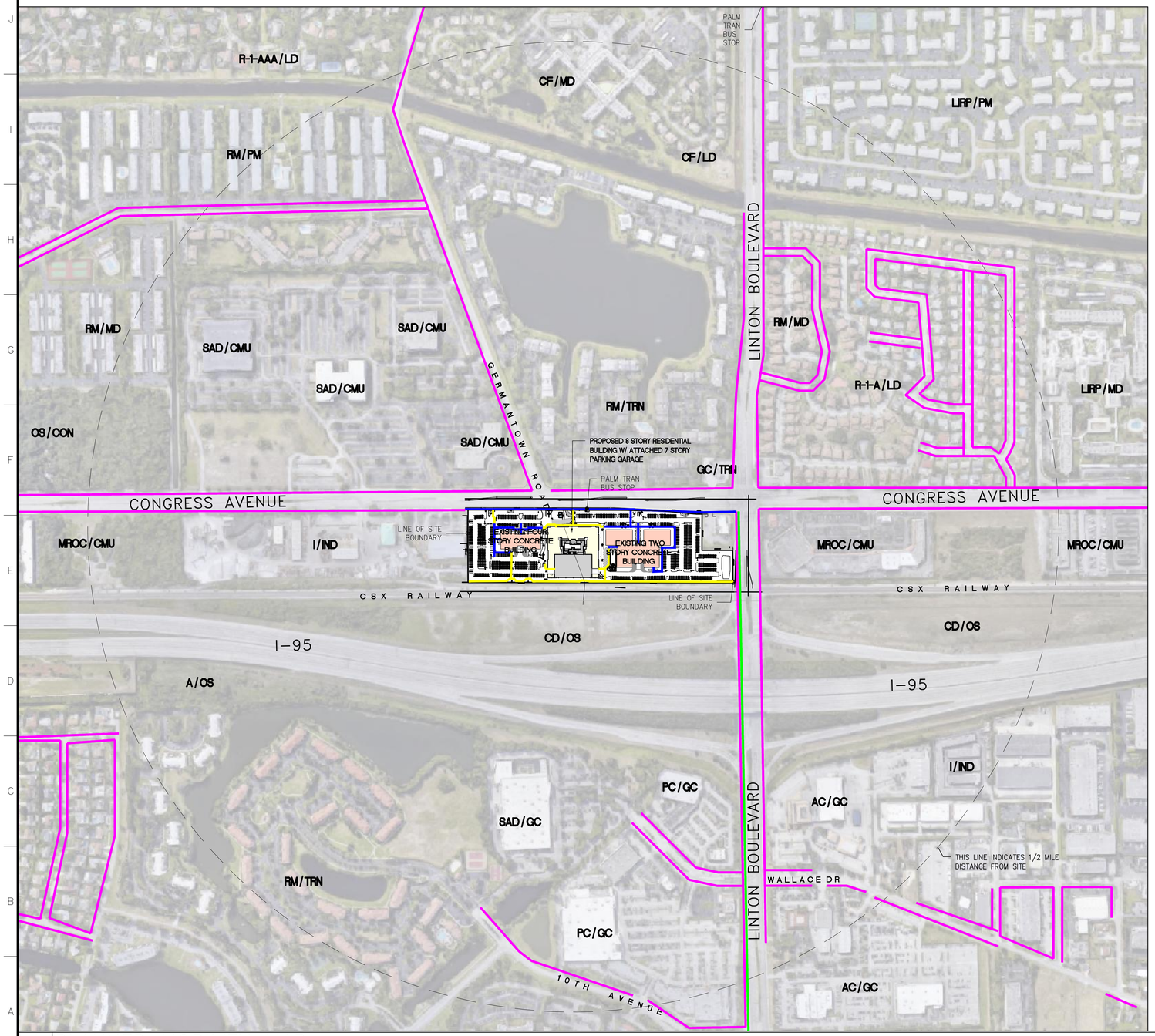

MOBILITY LEGEND

PEDESTRIAN NETWORK

BIKE LANES

- EXISTING (BY OTHERS)

SIDEWALKS

- EXISTING SIDEWALKS (BY OTHERS)
- EXISTING SIDEWALKS (PROPOSED PROJECT)
- PROPOSED SIDEWALKS (PROPOSED PROJECT)
- PALM TRAN BUS STOP

ZONING TAG

ZONING/LAND USE

ZONING DISTRICT — FUTURE LAND USE

1 PLANNED MOBILITY MAP

AS1.30 SCALE: 1"=300'-0"

NORTH

SITE PLAN
RE-SUBMITTAL
04/28/2022

RLC Architects
14 SE 4th Street, Boca Raton, FL 33432
P: 561.395.0225 F: 561.395.6007
Web www.rlcarchitects.com

COPYRIGHT RLC ARCHITECTS, P.A. 2017
STATE of FLORIDA REGISTERED ARCHITECTS No. AA26001060

THE DRAWINGS AND ALL THE IDEAS, ARRANGEMENTS, DESIGNS AND PLANS INDICATED OR REPRESENTED BY THESE DRAWINGS AND PLANS ARE AND SHALL REMAIN THE PROPERTY OF RLC ARCHITECTS, P.A. AND NO PART THEREOF SHALL BE USED FOR ANY PURPOSE OTHER THAN FOR THE PROJECT FOR WHICH PURPOSE WHATSOEVER EXCEPT WITH THE SPECIFIC WRITTEN PERMISSION OF RLC ARCHITECTS, P.A.

STATE OF FLORIDA
2022-04-28 12:07:45-04'00'
AR0009566
BRUCE W. RETZSCH

CONSULTANT INFO/LOGO

DELRAY CENTRAL MASTER PLAN

1625 SOUTH CONGRESS

REVISIONS

Drawing Title

PLANNED MOBILITY/VECINITY MAP

Scale
Project No. 20112.00
Plot Date 04/28/2022

Principal: JC
Project Director:
Project Manager:
Drafted by: MGC
Checked by:

Sheet No.

AS1.30

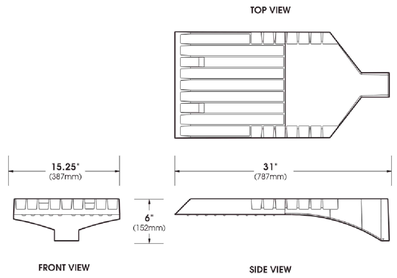

3 PROPOSED SITE LIGHT FIXTURES

AS1.40 SCALE: N/A

Specifications

Depth (D1):	5.5"
Depth (D2):	1.5"
Height:	8"
Width:	9"
Weight: (without options)	9 lbs

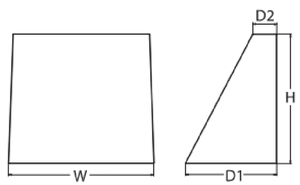

2 PROPOSED WALL LIGHT FIXTURES

AS1.40 SCALE: N/A

Luminaire Schedule: DELRAY CENTRAL - SITE_REV 3 DELRAY BEACH, FL 10/06/2021

Symbol	Qty	Label	Arrangement	MANUFACTURER	CATALOG NUMBER	MOUNTING	LLF	Luminaire Lumens	Luminaire Watts	Arrangement Watts
	20	SA	SINGLE	U.S. Architectural Lighting	VLL-LED/PLED-VSQ-M/80LED-350mA/NW/1	POLE MOUNT A.F.G.	0.855	13263	85.4	85.4
	10	SB	SINGLE	U.S. Architectural Lighting	VLL-LED/PLED-III-M/40LED-525mA/NW/1/HS-PLED	POLE MOUNT A.F.G.	0.855	7060	64.7	64.7
	7	SC	SINGLE	U.S. Architectural Lighting	VLL-LED/PLED-IV-FT/80LED-1050mA/NW/1/HS-PLED	POLE MOUNT A.F.G.	0.855	22451	256.4	256.4
	5	SD	SINGLE	U.S. Architectural Lighting	VLL-LED/PLED-IV-FT/80LED-700mA/NW/1/HS-PLED	POLE MOUNT A.F.G.	0.855	16903	173.6	173.6
	1	SE	SINGLE	U.S. Architectural Lighting	VLL-LED/PLED-IV-FT/80LED-525mA/NW/1/HS-PLED	POLE MOUNT A.F.G.	0.855	13328	129.4	129.4
	6	SF	SINGLE	U.S. Architectural Lighting	VLL-LED/PLED-IV/80LED-525mA/NW/1	POLE MOUNT A.F.G.	0.855	18635	129.4	129.4
	8	SW	Single	Lithonia Lighting	WDGE1 LED P2 40K 80CRI VF	WALL MOUNT A.F.F. (bottom of fixture)	0.855	1979	15.0178	15.0178

Calculation Summary: DELRAY CENTRAL - SITE_REV 3 DELRAY BEACH, FL 10/06/2021

Label	Calc Type	Units	Avg	Max	Max (allowed)	Min	Min (allowed)	Avg/Min	Avg/Min (allowed)	Max/Min	Max/Min (allowed)
ACCENT PATHWAY (bottom)	Illuminance	Fc	1.27	2.8	5.0	0.5	0.5	2.54	N/A	5.60	N/A
ACCENT PATHWAY (center)	Illuminance	Fc	1.39	2.7	5.0	1.0	0.5	1.39	N/A	2.70	N/A
ACCENT PATHWAY (left side)	Illuminance	Fc	1.47	2.4	5.0	0.9	0.5	1.63	N/A	2.67	N/A
ACCENT PATHWAY (right side)	Illuminance	Fc	1.36	2.5	5.0	0.3	0.5	4.53	N/A	8.33	N/A
BUILDING ENTRANCE	Illuminance	Fc	5.70	5.7	10.0	5.7	1.0	1.00	3.1	1.00	N/A
PARKING LOT (center)	Illuminance	Fc	2.06	3.5	12.0	1.0	1.0	2.06	3.1	3.50	12.1
PARKING LOT (left side)	Illuminance	Fc	1.81	3.6	12.0	1.0	1.0	1.81	3.1	3.60	12.1
PARKING LOT (right side)	Illuminance	Fc	1.80	3.5	12.0	1.0	1.0	1.80	3.1	3.50	12.1
PROPERTY LINE EAST (8' above grade)	Illuminance	Fc	0.88	2.5	0.25	0.0	N/A	N.A.	N/A	N.A.	N/A
PROPERTY LINE NORTH (8' above grade)	Illuminance	Fc	0.09	0.2	0.25	0.0	N/A	N.A.	N/A	N.A.	N/A
PROPERTY LINE SOUTH (8' above g	Illuminance	Fc	0.16	0.2	0.25	0.0	N/A	N.A.	N/A	N.A.	N/A
PROPERTY LINE WEST (8' above grade)	Illuminance	Fc	0.11	0.2	0.25	0.0	N/A	N.A.	N/A	N.A.	N/A

Luminaire Location Summary: DELRAY CENTRAL - SITE_REV 3 DELRAY BEACH, FL 10/06/2021

LumNo	Label	Orient	X	Y	Z
1	SA	90	-102.737	122.261	25
2	SA	0	-310.821	321.515	25
3	SA	0	-311.328	230.269	25
4	SA	0	-311.389	153.371	25
5	SA	180	-236.505	204.661	25
6	SA	331.372	-133.437	185.081	25
7	SA	270	-22.276	197.339	25
8	SA	90	-210.169	123.412	25
9	SA	180	-236.505	290.669	25
10	SA	180	606.862	132.247	25
11	SA	180	788.011	222.412	25
12	SA	90	916.363	115.602	25
13	SA	180	806.862	304.293	25
14	SA	0	733.658	310.709	25
15	SA	0	733.658	238.215	25
16	SA	90	-317.805	59.852	25
17	SA	90	2.595	95.933	25
18	SA	90	-212.032	58.998	25
19	SA	90	-100.218	58.998	25
20	SA	180	985.741	68.841	25
21	SB	0	-381.119	321.658	25
22	SB	0	-381.022	210.472	25
23	SB	0	-380.303	119.314	25
24	SB	180	37.01	259.992	25
25	SB	270	-310.84	399.727	25
26	SB	180	878.279	326.532	25
27	SB	180	875.988	224.506	25
28	SB	0	333.32	276.469	25
29	SB	270	919.212	183.957	25
30	SB	270	813.831	400.636	25
31	SC	270	-214.277	399.45	25
32	SC	270	-8.283	398.397	25
33	SC	0	333.32	172.255	25
34	SC	270	-119.425	399.45	25
35	SC	0	662.43	153.498	25
36	SC	180	34.3	123.522	25
37	SC	270	101.506	398.286	25
38	SD	270	410.596	402.536	25
39	SD	270	511.927	403.485	25
40	SD	270	623.58	401.98	25
41	SD	270	312.115	402.886	25
42	SD	270	210.229	402.933	25
43	SE	270	712.169	401.429	25
44	SF	90	764.241	42.499	25
45	SF	90	878.431	41.071	25
46	SF	90	496.807	43.324	25
47	SF	90	564.248	42.354	25
48	SF	90	652.933	42.324	25
49	SF	90	350.893	49.203	25
50	SW	90	184.761	334.38	12
51	SW	270	144.651	54.058	15
52	SW	270	184.651	54.058	15
53	SW	270	224.651	54.058	15
54	SW	270	264.651	54.058	15
55	SW	270	64.651	54.058	15
56	SW	270	104.651	54.058	15
57	SW	270	304.651	54.058	15

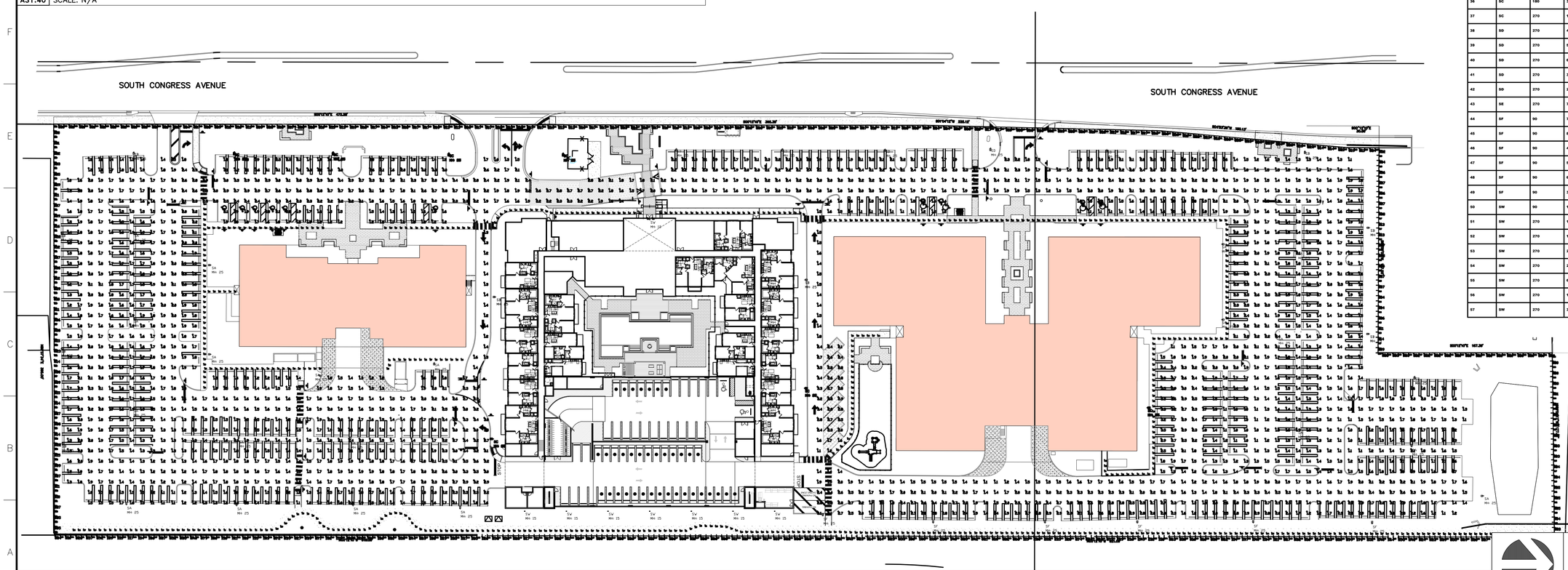

1 PHOTOMETRICS PLAN

AS1.40 SCALE: 1"=60'-0"

SITE PLAN
RE-SUBMITTAL
04/28/2022

RLC Architects
14 SE 4th Street, Boca Raton, FL 33432
561.395.1555 Fax: 561.395.8007
Web www.rlcarchitects.com

COPYRIGHT RLC ARCHITECTS, P.A. 2017
STATE OF FLORIDA REGISTERED ARCHITECTS No. AA26001060
THE DRAWINGS AND ALL THE IDEAS, ARRANGEMENTS, DESIGNS AND PLANS INDICATED OR REPRESENTED BY THESE DRAWINGS AND SPECIFICATIONS REMAIN THE PROPERTY OF RLC ARCHITECTS, P.A. AND NO PART THEREOF SHALL BE CONVEYED OR DISCLOSED TO OTHERS OR BE USED FOR ANY PURPOSE WHATSOEVER EXCEPT WITH THE SPECIFIC WRITTEN PERMISSION OF RLC ARCHITECTS, P.A.

STATE OF FLORIDA
2022-04-28 12:07:47+00:00
AR0009566
LICENSED ARCHITECT
BRUCE W. RETZSCH

CONSULTANT INFO/LOGO

DELRAY CENTRAL MASTER PLAN

1625 SOUTH CONGRESS

REVISIONS

Drawing Title
PHOTOMETRICS PLAN

Scale
Project No. 20112.00
Plot Date 04/28/2022

Principal: JC
Project Director:
Project Manager:
Drafted by: MGC
Checked by:

Sheet No.
AS1.40

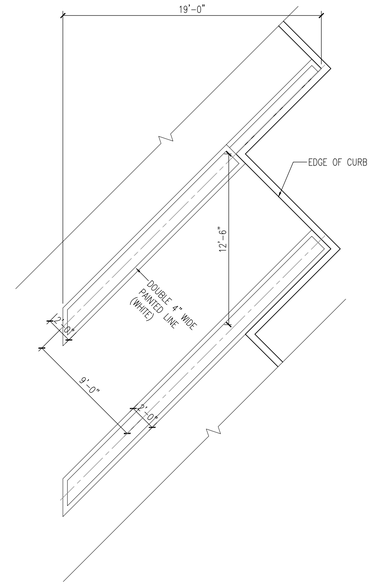

6 | 45 DEGREE PARKING STALL
AS1.50 | SCALE: 3/16"= 1'-0"

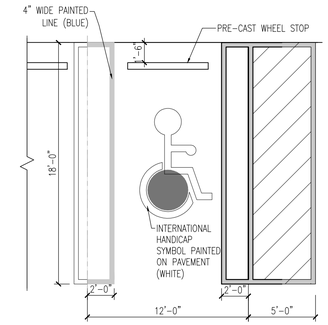

4 | H.C PARKING STALL
AS1.50 | SCALE: 3/16"= 1'-0"

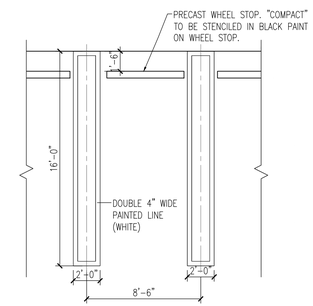

3 | EXISTING COMPACT PARKING SPACE
AS1.50 | SCALE: 3/16"= 1'-0"

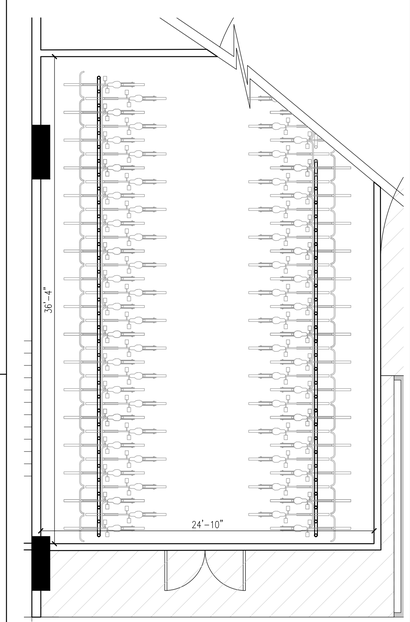

NOTE:
SECURE BIKE ROOM TO PROVIDE LONG TERM STORAGE FOR (68) BIKES IN COMPLIANCE WITH SEC. 4.6.9.C(1)c

5 | LONG TERM BICYCLE STORAGE
AS1.50 | SCALE: 3/16"= 1'-0"

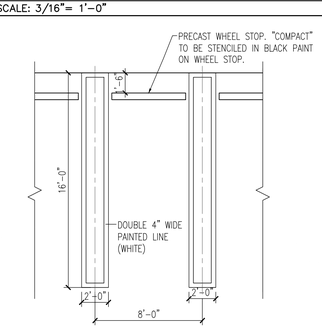

2 | COMPACT PARKING SPACE
AS1.50 | SCALE: 3/16"= 1'-0"

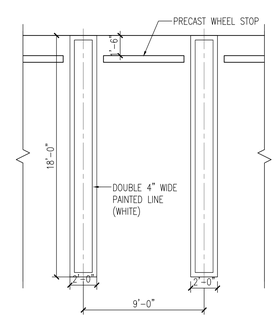

1 | STANDARD PARKING STALL
AS1.50 | SCALE: 3/16"= 1'-0"

NORTH

SITE PLAN
RE-SUBMITTAL
04/28/2022

RLC Architects
14 SE 4th Street, Boca Raton, FL 33432
561.395.0225 Fax: 561.395.6007
Web www.rlcarchitects.com

COPYRIGHT RLC ARCHITECTS, P.A. 2017
STATE of FLORIDA REGISTERED ARCHITECTS No. AA26001060
THE DRAWINGS AND ALL THE IDEAS, ARRANGEMENTS, DESIGNS AND PLANS INDICATED OR REPRESENTED BY THESE DRAWINGS ARE OWNED BY AND REMAIN THE PROPERTY OF RLC ARCHITECTS, P.A. AND NO PART THEREOF SHALL BE USED FOR ANY PURPOSE WHATSOEVER, ON ANY OTHER PROJECT OR FOR ANY PURPOSE WHATSOEVER EXCEPT WITH THE SPECIFIC WRITTEN PERMISSION OF RLC ARCHITECTS, P.A.

STATE OF FLORIDA
BRUCE W. RETZSCH
AR0009566
2022.04.28 12:07:50-04'00'
BRUCE W. RETZSCH

CONSULTANT INFO/LOGO

DELRAY CENTRAL MASTER PLAN
1625 SOUTH CONGRESS

REVISIONS

Drawing Title
SITE PLAN DETAILS

Scale
Project No. 20112.00
Plot Date 04/28/2022

Principal: JC
Project Director:
Project Manager:
Drafted by: MGC
Checked by: JCC

Sheet No.
AS1.50

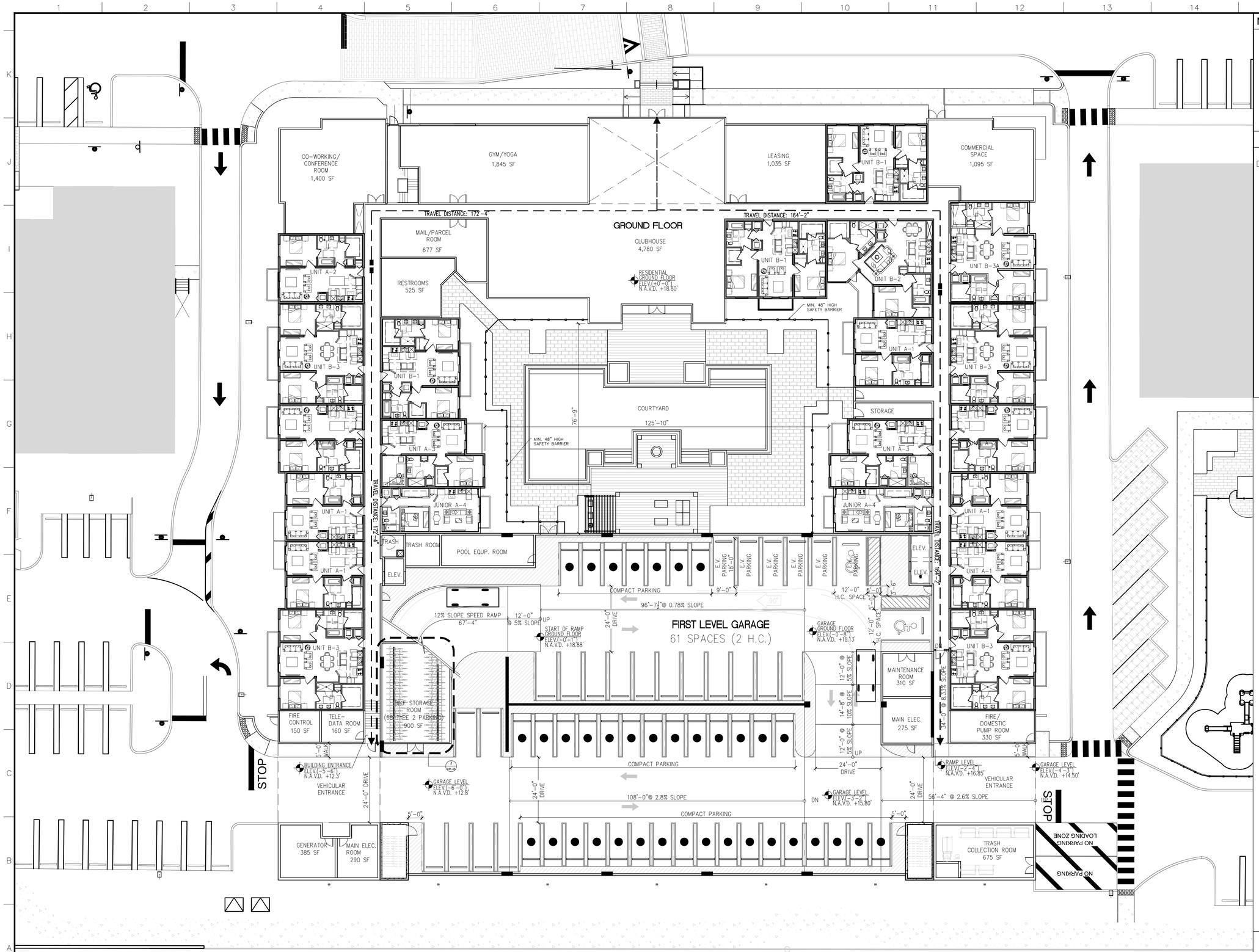

1 FIRST FLOOR PLAN

A1.01 SCALE: 1/16"=1-0"

NOTES

1. OWNER UNDERSTANDS THAT ADA/FHA AND CODE REQUIREMENTS NEEDS TO BE PROVIDED IN COMPLIANCE THROUGHOUT THIS PROJECT. THOSE REQUIREMENTS WILL BE MEET THROUGH THE APPROPRIATE MEANS NECESSARY AND WILL BE DEVELOPED AND FINALIZED DURING THE CONSTRUCTION DOCUMENT PHASE.
2. BUILDING IS CLASSIFIED AS R-2 AND EQUIPPED WITH AN AUTOMATIC SPRINKLER SYSTEM.
3. TO BE TYPE II-B NON COMBUSTIBLE CONSTRUCTION. 1-HR FIRE PARTITION FOR CORRIDORS AND FOR DWELLING UNIT SEPARATIONS. 1-HR FIRE SEPARATION BETWEEN GARAGE AND RESIDENTIAL.

AUTO-TURN LEGEND

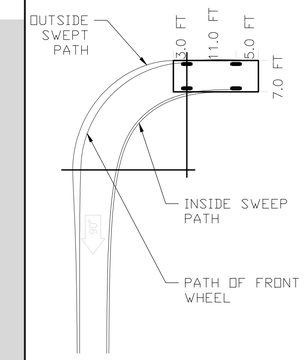

NORTH

SITE PLAN RE-SUBMITTAL 04/28/2022

RLC Architects
14 SE 4th Street, Boca Raton, FL 33432
P: 561.395.0225 F: 561.395.6007
Web www.rlcarchitects.com

COPYRIGHT RLC ARCHITECTS, P.A. 2017
STATE of FLORIDA REGISTERED ARCHITECTS No. AA26001060
THE DRAWINGS AND ALL THE IDEAS, ARRANGEMENTS, DESIGNS AND PLANS INDICATED OR REPRESENTED BY THESE DRAWINGS ARE THE PROPERTY OF RLC ARCHITECTS, P.A. AND NO PART THEREOF SHALL BE USED FOR ANY PURPOSE WHATSOEVER EXCEPT WITH THE SPECIFIC WRITTEN PERMISSION OF RLC ARCHITECTS, P.A.

STATE OF FLORIDA
2022-04-28 12:07:53-04'00'
AR0009566
BRUCE W. RETZSCH

CONSULTANT INFO/LOGO

DELRAY CENTRAL MASTER PLAN

1625 SOUTH CONGRESS

REVISIONS

Drawing Title
FIRST FLOOR PLAN

Scale
Project No. 20112.00
Plot Date 04/28/2022

Principal: JC
Project Director:
Project Manager:
Drafted by: MGC
Checked by:

Sheet No.
A1.01

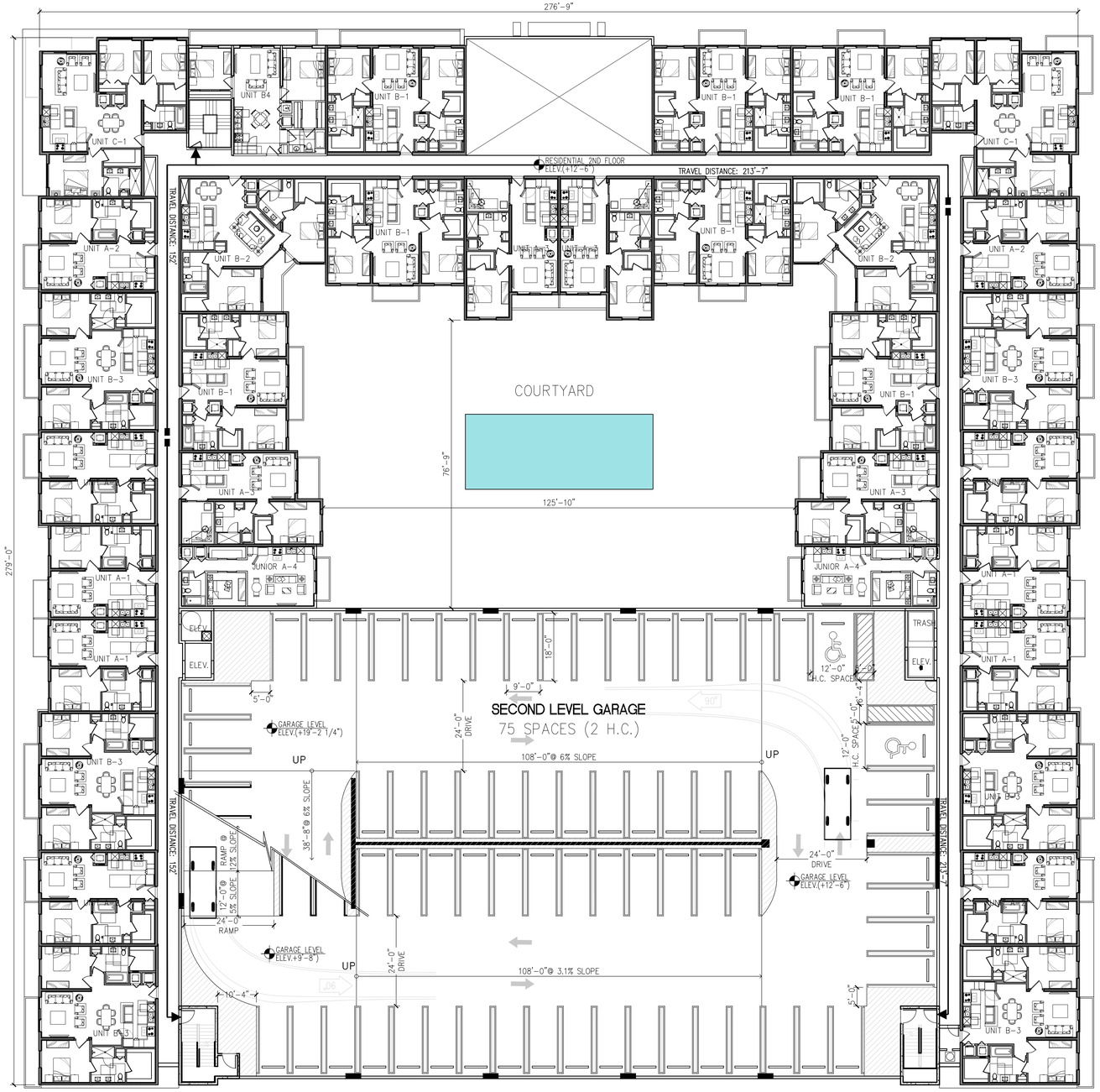

1 SECOND FLOOR PLAN

A1.02 SCALE: 1/16"=1'-0"

NOTES

1. OWNER UNDERSTANDS THAT ADA/FHA AND CODE REQUIREMENTS NEEDS TO BE PROVIDED IN COMPLIANCE THROUGHOUT THIS PROJECT. THOSE REQUIREMENTS WILL BE MEET THROUGH THE APPROPRIATE MEANS NECESSARY AND WILL BE DEVELOPED AND FINALIZED DURING THE CONSTRUCTION DOCUMENT PHASE.
2. BUILDING IS CLASSIFIED AS R-2 AND EQUIPPED WITH AN AUTOMATIC SPRINKLER SYSTEM.
3. TO BE TYPE II-B NON COMBUSTIBLE CONSTRUCTION. 1-HR FIRE PARTITION FOR CORRIDORS AND FOR DWELLING UNIT SEPARATIONS. 1-HR FIRE SEPARATION BETWEEN GARAGE AND RESIDENTIAL.

AUTO-TURN LEGEND

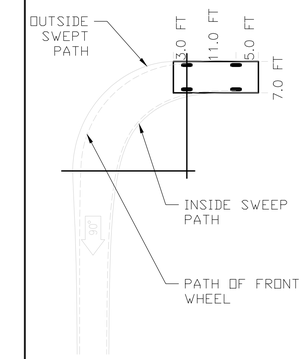

NORTH

SITE PLAN
RE-SUBMITTAL
04/28/2022

RLC Architects
14 SE 4th Street, Boca Raton, FL 33432
P: 561.395.0225 F: 561.395.6007
Web www.rlcarchitects.com

COPYRIGHT RLC ARCHITECTS, P.A. 2017
STATE OF FLORIDA REGISTERED ARCHITECTS No. AA26001060

THE DRAWINGS AND ALL THE IDEAS, ARRANGEMENTS, DESIGNS AND PLANS INDICATED OR REPRESENTED BY THESE DRAWINGS AND PLANS ARE AND SHALL REMAIN THE PROPERTY OF RLC ARCHITECTS, P.A. AND NO PART THEREOF SHALL BE USED FOR ANY PURPOSE OR ADDITION OR EXTENSION OF THIS PURPOSE WHATSOEVER EXCEPT WITH THE SPECIFIC WRITTEN PERMISSION OF RLC ARCHITECTS, P.A.

STATE OF FLORIDA
2022.04.28 12:07:56-04'00'
AR0009566
LICENSED ARCHITECT
BRUCE W. RETZSCH

CONSULTANT INFO/LOGO

DELRAY CENTRAL MASTER PLAN

1625 SOUTH CONGRESS

REVISIONS

Drawing Title
SECOND FLOOR PLAN

Scale
Project No. 20112.00
Plot Date 04/28/2022

Principal: JC
Project Director:
Project Manager:
Drafted by: MGC
Checked by:

Sheet No.
A1.02

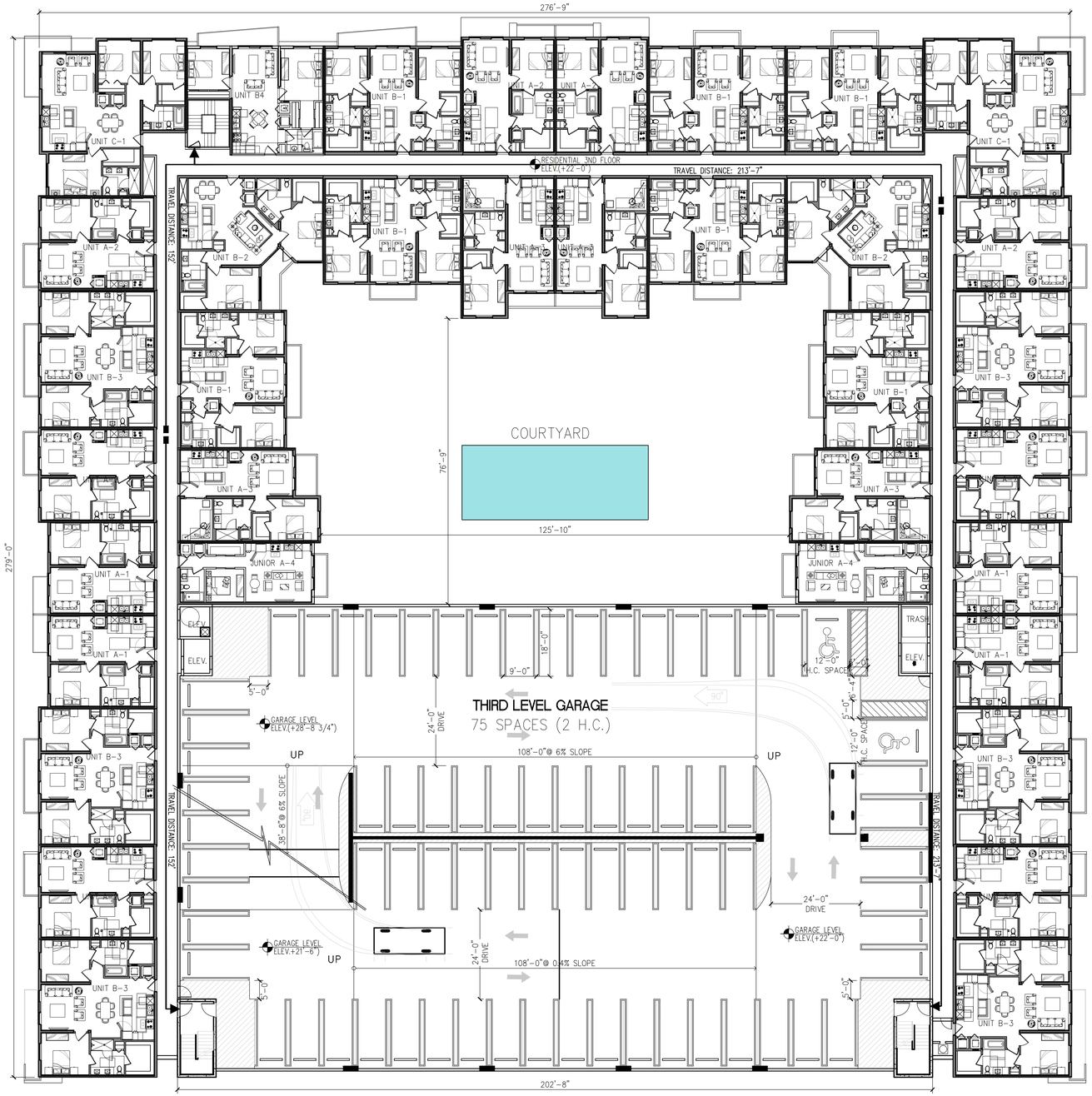

NOTES

1. OWNER UNDERSTANDS THAT ADA/FHA AND CODE REQUIREMENTS NEEDS TO BE PROVIDED IN COMPLIANCE THROUGHOUT THIS PROJECT. THOSE REQUIREMENTS WILL BE MEET THROUGH THE APPROPRIATE MEANS NECESSARY AND WILL BE DEVELOPED AND FINALIZED DURING THE CONSTRUCTION DOCUMENT PHASE.
2. BUILDING IS CLASSIFIED AS R-2 AND EQUIPPED WITH AN AUTOMATIC SPRINKLER SYSTEM.
3. TO BE TYPE II-B NON COMBUSTIBLE CONSTRUCTION. 1-HR FIRE PARTITION FOR CORRIDORS AND FOR DWELLING UNIT SEPARATIONS. 1-HR FIRE SEPARATION BETWEEN GARAGE AND RESIDENTIAL.

AUTO-TURN LEGEND

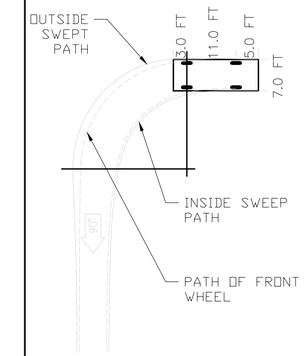

1 THIRD FLOOR PLAN

A1.03 SCALE: 1/16"=1'-0"

NORTH

SITE PLAN RE-SUBMITTAL 04/28/2022

RLC Architects
14 SE 4th Street, Boca Raton, FL 33432
P: 561.392.2085 F: 561.392.2086 C: 561.395.0007
Web www.rlcarchitects.com

COPYRIGHT RLC ARCHITECTS, P.A. 2017
STATE OF FLORIDA REGISTERED ARCHITECTS No. AA26001060

THE DRAWINGS AND ALL THE IDEAS, ARRANGEMENTS, DESIGNS AND PLANS INDICATED OR REPRESENTED BY THESE DRAWINGS AND SPECIFICATIONS REMAIN THE PROPERTY OF RLC ARCHITECTS, P.A. AND NO PART THEREOF SHALL BE CONVEYED OR REPRODUCED IN ANY FORM OR MANNER FOR ANY PURPOSE WHATSOEVER EXCEPT WITH THE SPECIFIC WRITTEN PERMISSION OF RLC ARCHITECTS, P.A.

STATE OF FLORIDA
2022-04-28 12:07:59-04:00
AR0009566
BRUCE W. RETZSCH

CONSULTANT INFO/LOGO

DELRAY CENTRAL MASTER PLAN

1625 SOUTH CONGRESS

REVISIONS

Drawing Title
THIRD FLOOR PLAN

Scale
Project No. 20112.00
Plot Date 04/28/2022

Principal: JC
Project Director:
Project Manager:
Drafted by: MGC
Checked by:

Sheet No.
A1.03

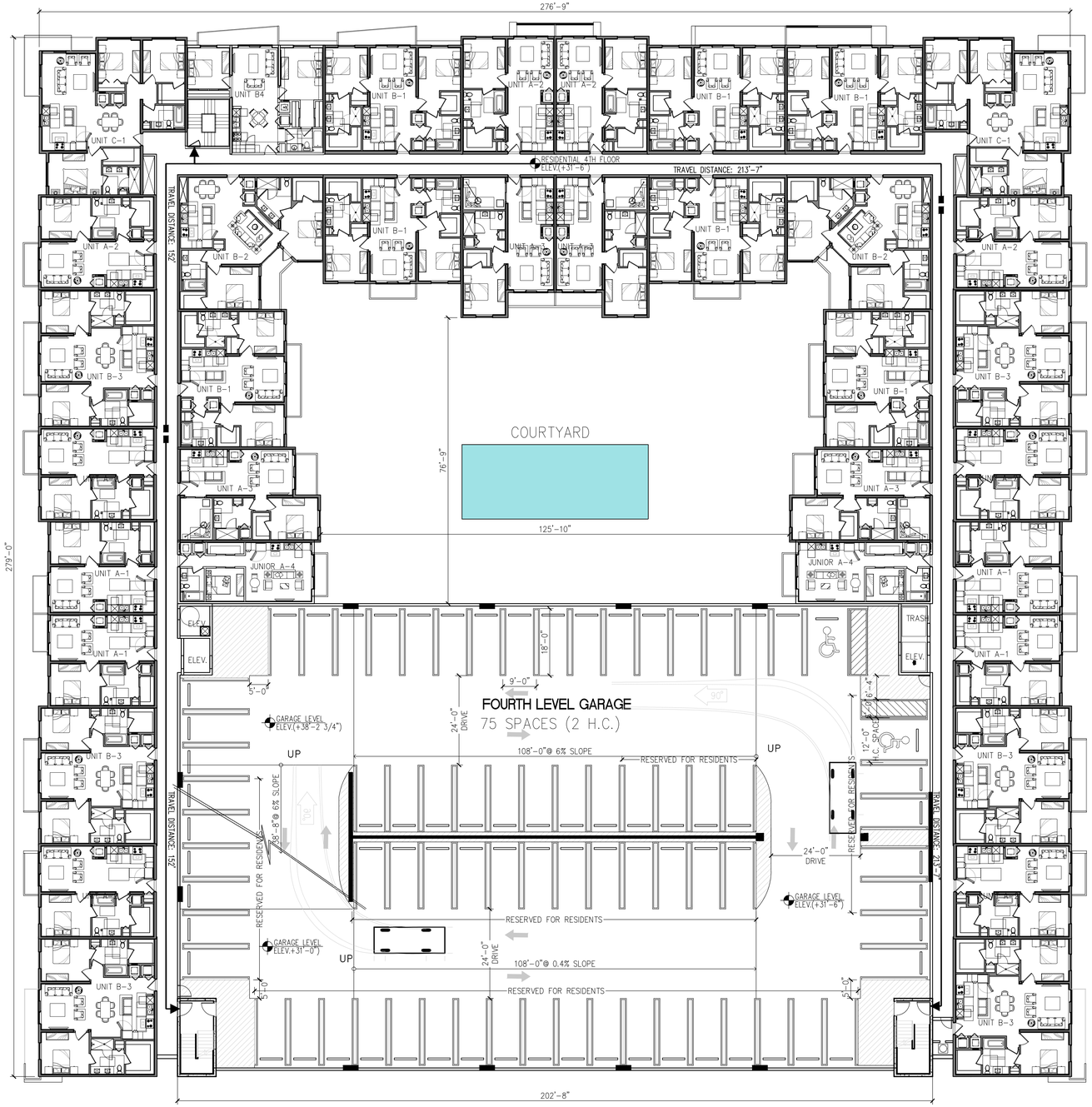

NOTES

1. OWNER UNDERSTANDS THAT ADA/FHA AND CODE REQUIREMENTS NEEDS TO BE PROVIDED IN COMPLIANCE THROUGHOUT THIS PROJECT. THOSE REQUIREMENTS WILL BE MEET THROUGH THE APPROPRIATE MEANS NECESSARY AND WILL BE DEVELOPED AND FINALIZED DURING THE CONSTRUCTION DOCUMENT PHASE.
2. BUILDING IS CLASSIFIED AS R-2 AND EQUIPPED WITH AN AUTOMATIC SPRINKLER SYSTEM.
3. TO BE TYPE II-B NON COMBUSTIBLE CONSTRUCTION. 1-HR FIRE PARTITION FOR CORRIDORS AND FOR DWELLING UNIT SEPARATIONS. 1-HR FIRE SEPARATION BETWEEN GARAGE AND RESIDENTIAL.

1 FOURTH FLOOR PLAN

A1.04 SCALE: 1/16"=1'-0"

NORTH

SITE PLAN
RE-SUBMITTAL
04/28/2022

RLC Architects
14 SE 4th Street, Boca Raton, FL 33432
P: 561.395.0225 F: 561.395.6007
Web www.rlcarchitects.com

COPYRIGHT RLC ARCHITECTS, P.A. 2017
STATE of FLORIDA REGISTERED ARCHITECTS No. AA26001060

THE DRAWINGS AND ALL THE IDEAS, ARRANGEMENTS, DESIGNS AND PLANS INDICATED OR REPRESENTED BY THESE DRAWINGS AND SPECIFICATIONS ARE TO REMAIN THE PROPERTY OF RLC ARCHITECTS, P.A. AND NO PART THEREOF SHALL BE USED FOR ANY PURPOSE OTHER THAN FOR THE SPECIFIED PURPOSE WHATSOEVER EXCEPT WITH THE SPECIFIC WRITTEN PERMISSION OF RLC ARCHITECTS, P.A.

STATE OF FLORIDA
2022-04-28 12:08:03-04'00'
AR0009566
BRUCE W. RETZSCH

CONSULTANT INFO/LOGO

DELRAY CENTRAL MASTER PLAN

1625 SOUTH CONGRESS

REVISIONS

Drawing Title
FOURTH FLOOR PLAN

Scale
Project No. 20112.00
Plot Date 04/28/2022

Principal: JC
Project Director:
Project Manager:
Drafted by: MGC
Checked by:

Sheet No.
A1.04

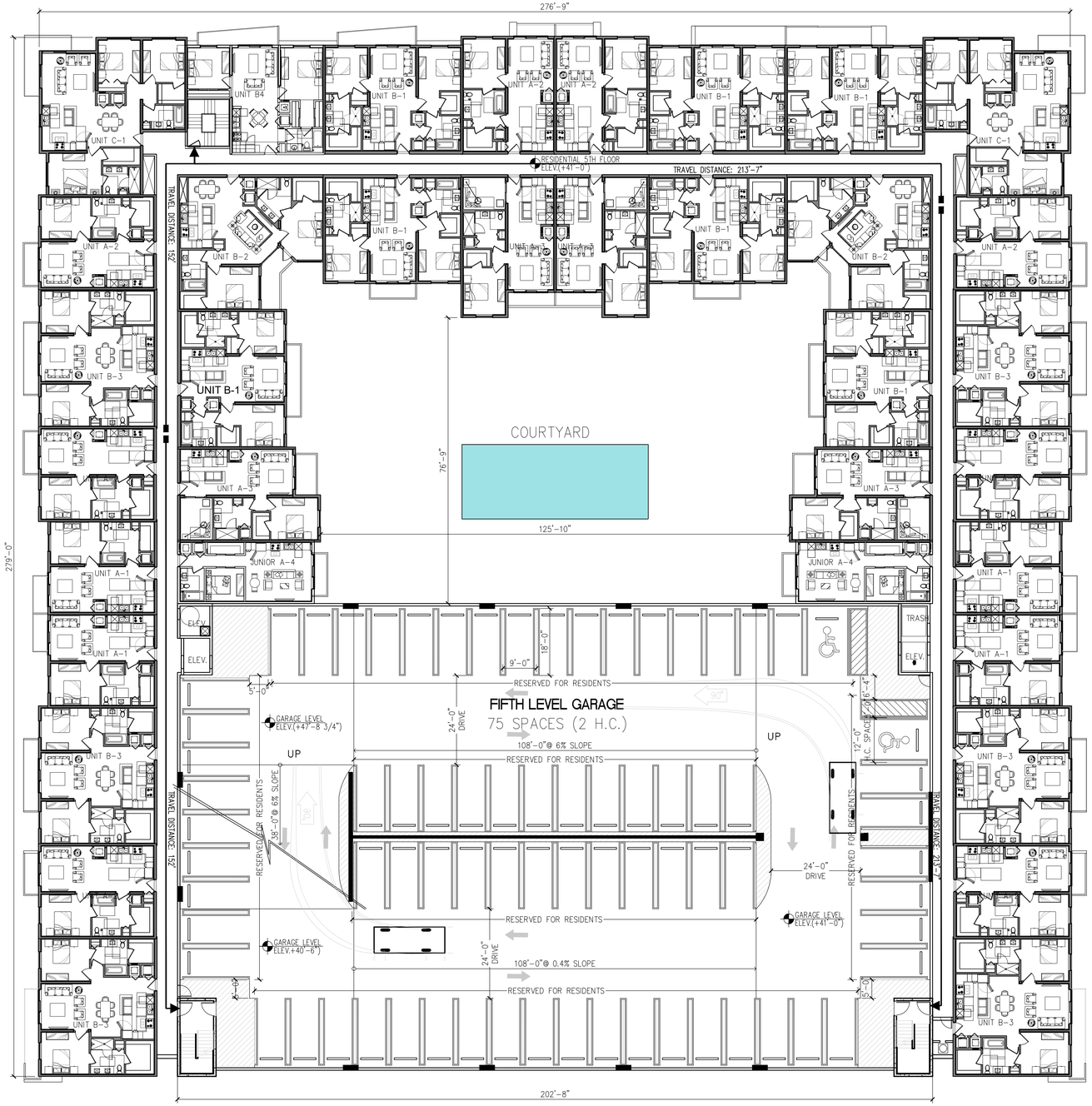

NOTES

1. OWNER UNDERSTANDS THAT ADA/FHA AND CODE REQUIREMENTS NEEDS TO BE PROVIDED IN COMPLIANCE THROUGHOUT THIS PROJECT. THOSE REQUIREMENTS WILL BE MEET THROUGH THE APPROPRIATE MEANS NECESSARY AND WILL BE DEVELOPED AND FINALIZED DURING THE CONSTRUCTION DOCUMENT PHASE.
2. BUILDING IS CLASSIFIED AS R-2 AND EQUIPPED WITH AN AUTOMATIC SPRINKLER SYSTEM.
3. TO BE TYPE II-B NON COMBUSTIBLE CONSTRUCTION. 1-HR FIRE PARTITION FOR CORRIDORS AND FOR DWELLING UNIT SEPARATIONS. 1-HR FIRE SEPARATION BETWEEN GARAGE AND RESIDENTIAL.

1 FIFTH FLOOR PLAN

A1.05 SCALE: 1/16"=1'-0"

NORTH

SITE PLAN
RE-SUBMITTAL
04/28/2022

RLC Architects
14 SE 4th Street, Boca Raton, FL 33432
P: 561.395.0225 F: 561.395.6007
Web www.rlcarchitects.com

COPYRIGHT RLC ARCHITECTS, P.A. 2017
STATE of FLORIDA REGISTERED ARCHITECTS No. AA26001060

THE DRAWINGS AND ALL THE IDEAS, ARRANGEMENTS, DESIGNS AND PLANS INDICATED OR REPRESENTED BY THESE DOCUMENTS, IS AND SHALL REMAIN THE PROPERTY OF RLC ARCHITECTS, P.A. AND NO PART THEREOF SHALL BE USED FOR ANY PURPOSE OTHER THAN FOR THE SPECIFIC PURPOSE WHATSOEVER EXCEPT WITH THE SPECIFIC WRITTEN PERMISSION OF RLC ARCHITECTS, P.A.

STATE OF FLORIDA
2022-04-27 12:08:06-04'00'
AR0009566
REGISTERED ARCHITECT
BRUCE W. RETZSCH

CONSULTANT INFO/LOGO

DELRAY CENTRAL MASTER PLAN

1625 SOUTH CONGRESS

REVISIONS

Drawing Title
FIFTH FLOOR PLAN

Scale
Project No. 20112.00
Plot Date 04/28/2022

Principal: JC
Project Director:
Project Manager:
Drafted by: MGC
Checked by:

Sheet No.
A1.05

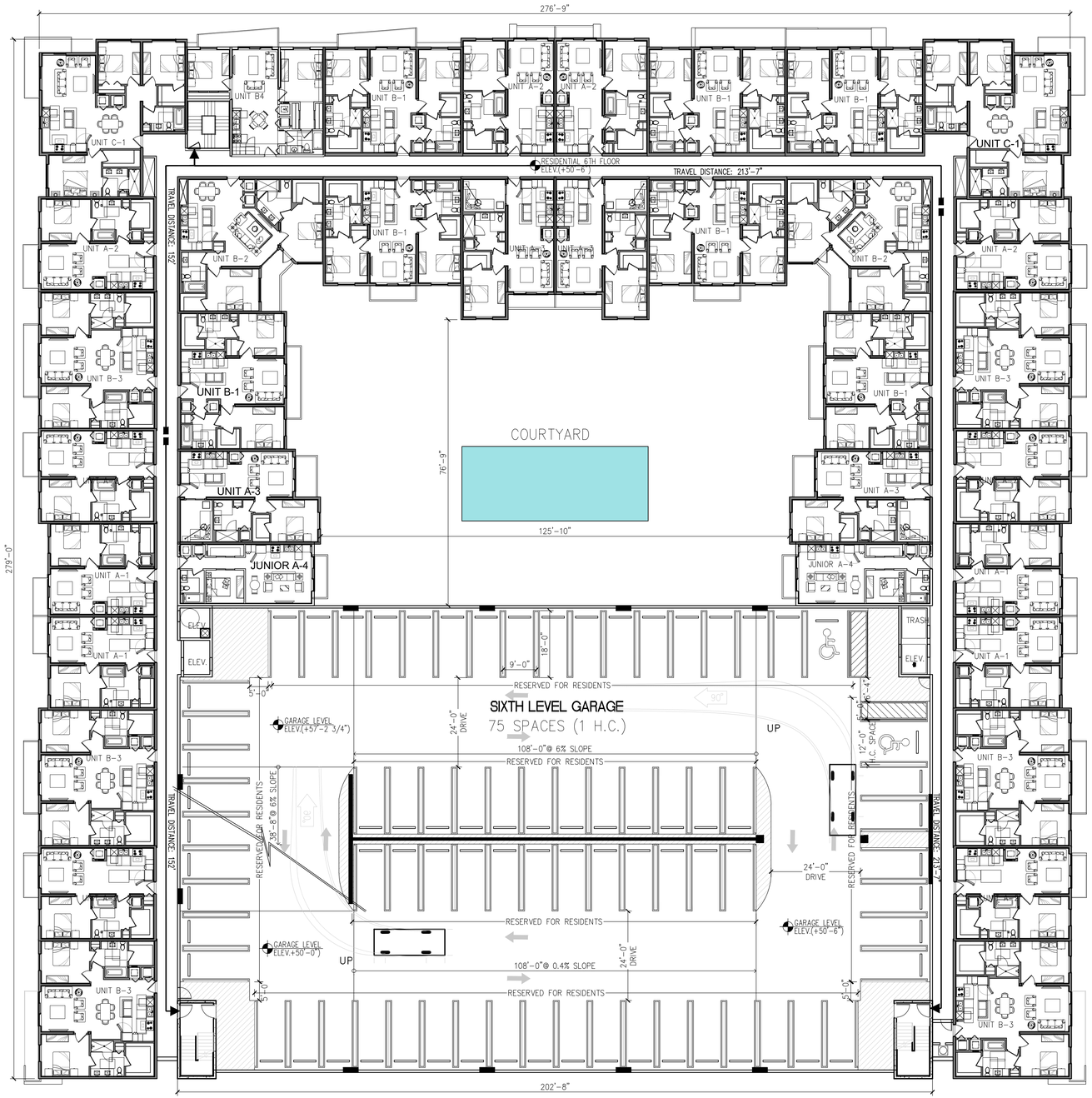

1 SIXTH FLOOR PLAN

A1.06 SCALE: 1/16"=1'-0"

NOTES

1. OWNER UNDERSTANDS THAT ADA/FHA AND CODE REQUIREMENTS NEEDS TO BE PROVIDED IN COMPLIANCE THROUGHOUT THIS PROJECT. THOSE REQUIREMENTS WILL BE MEET THROUGH THE APPROPRIATE MEANS NECESSARY AND WILL BE DEVELOPED AND FINALIZED DURING THE CONSTRUCTION DOCUMENT PHASE.
2. BUILDING IS CLASSIFIED AS R-2 AND EQUIPPED WITH AN AUTOMATIC SPRINKLER SYSTEM.
3. TO BE TYPE II-B NON COMBUSTIBLE CONSTRUCTION. 1-HR FIRE PARTITION FOR CORRIDORS AND FOR DWELLING UNIT SEPARATIONS. 1-HR FIRE SEPARATION BETWEEN GARAGE AND RESIDENTIAL.

NORTH

SITE PLAN
RE-SUBMITTAL
04/28/2022

RLC Architects
14 SE 4th Street, Boca Raton, FL 33432
P: 561.395.0225 F: 561.395.6007
Web www.rlcarchitects.com

COPYRIGHT RLC ARCHITECTS, P.A. 2017
STATE OF FLORIDA REGISTERED ARCHITECTS No. AA26001060
THE DRAWINGS AND ALL THE IDEAS, ARRANGEMENTS, DESIGNS AND PLANS INDICATED OR REPRESENTED BY THESE DRAWINGS AND SPECIFICATIONS REMAIN THE PROPERTY OF RLC ARCHITECTS, P.A. AND NO PART THEREOF SHALL BE CONVEYED OR DISCLOSED TO OTHERS OR USED FOR ANY PURPOSE WHATSOEVER EXCEPT WITH THE SPECIFIC WRITTEN PERMISSION OF RLC ARCHITECTS, P.A.

STATE OF FLORIDA
2022-04-27 12:08:09-04:00
AR0009566
LICENSED ARCHITECT
BRUCE W. RETZSCH

CONSULTANT INFO/LOGO

DELRAY CENTRAL MASTER PLAN

1625 SOUTH CONGRESS

REVISIONS

Drawing Title
6TH FLOOR PLAN

Scale
Project No. 20112.00
Plot Date 04/28/2022

Principal: JC
Project Director:
Project Manager:
Drafted by: MGC
Checked by:

Sheet No.
A1.06

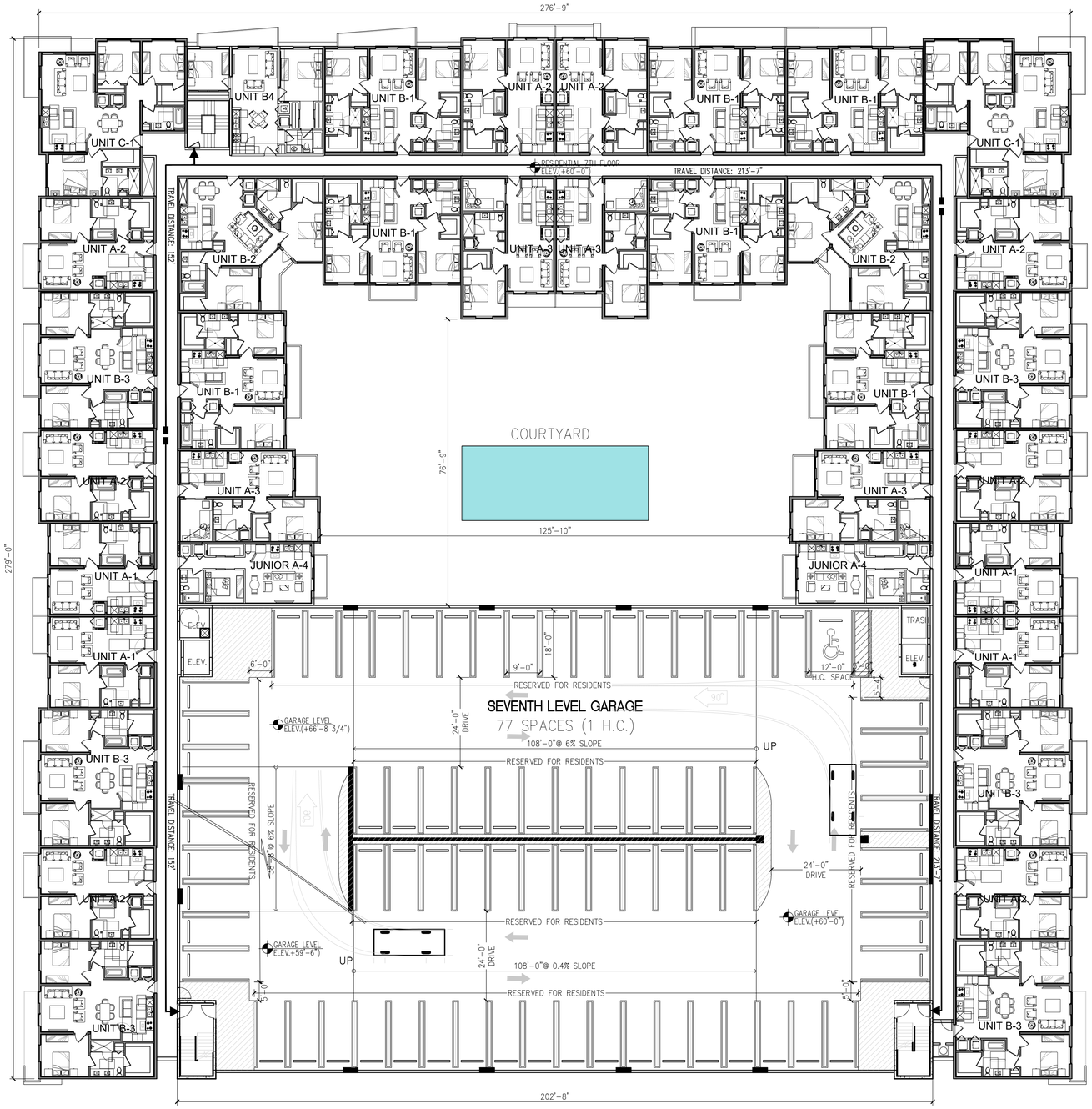

1 SEVENTH FLOOR PLAN

A1.07 SCALE: 1/16"=1'-0"

NOTES

1. OWNER UNDERSTANDS THAT ADA/FHA AND CODE REQUIREMENTS NEEDS TO BE PROVIDED IN COMPLIANCE THROUGHOUT THIS PROJECT. THOSE REQUIREMENTS WILL BE MEET THROUGH THE APPROPRIATE MEANS NECESSARY AND WILL BE DEVELOPED AND FINALIZED DURING THE CONSTRUCTION DOCUMENT PHASE.
2. BUILDING IS CLASSIFIED AS R-2 AND EQUIPPED WITH AN AUTOMATIC SPRINKLER SYSTEM.
3. TO BE TYPE II-B NON COMBUSTIBLE CONSTRUCTION. 1-HR FIRE PARTITION FOR CORRIDORS AND FOR DWELLING UNIT SEPARATIONS. 1-HR FIRE SEPARATION BETWEEN GARAGE AND RESIDENTIAL.

NORTH

SITE PLAN
RE-SUBMITTAL
04/28/2022

RLC Architects
14 SE 4th Street, Boca Raton, FL 33432
Tel. 561.395.0225 Fax. 561.395.6007
Web www.rlcarchitects.com

COPYRIGHT RLC ARCHITECTS, P.A. 2017
STATE of FLORIDA REGISTERED ARCHITECTS No. AA26001060
THE DRAWINGS AND ALL THE IDEAS, ARRANGEMENTS, DESIGNS AND PLANS INDICATED OR REPRESENTED BY THESE DRAWINGS ARE AND SHALL REMAIN THE PROPERTY OF RLC ARCHITECTS, P.A. AND NO PART THEREOF SHALL BE USED FOR ANY PURPOSE OTHER THAN FOR THE SPECIFIED PURPOSE WHATSOEVER EXCEPT WITH THE SPECIFIC WRITTEN PERMISSION OF RLC ARCHITECTS, P.A.

STATE OF FLORIDA
2022-04-27 12:08:12-04'00'
AR0009566
BRUCE W. RETZSCH

CONSULTANT INFO/LOGO

DELRAY CENTRAL MASTER PLAN

1625 SOUTH CONGRESS

REVISIONS

Drawing Title
7TH FLOOR PLAN

Scale
Project No. 20112.00
Plot Date 04/28/2022

Principal: JC
Project Director:
Project Manager:
Drafted by: MGC
Checked by:

Sheet No.
A1.07

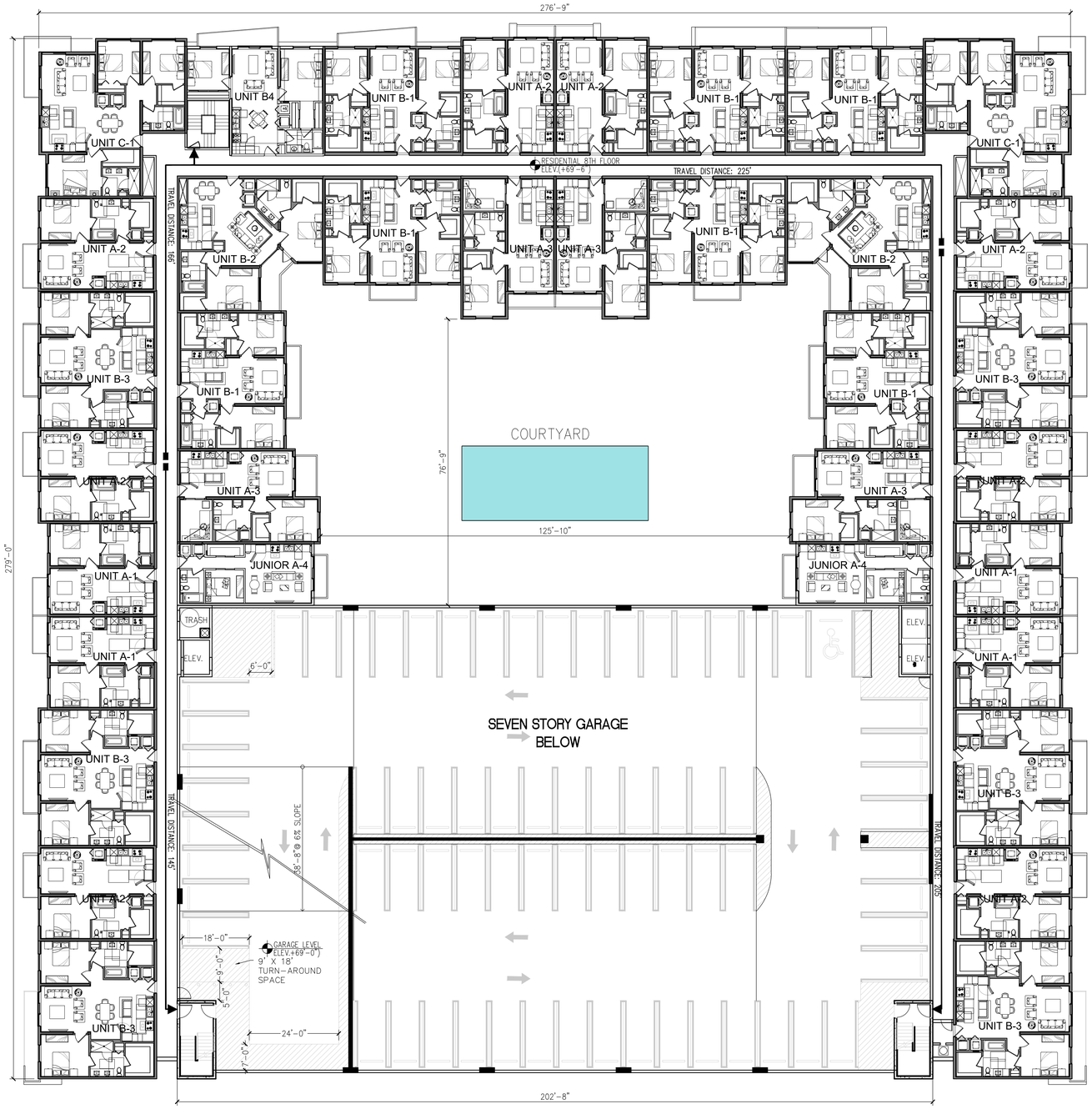

1 EIGHTH FLOOR PLAN

A1.08 SCALE: 1/16"=1'-0"

NOTES

1. OWNER UNDERSTANDS THAT ADA/FHA AND CODE REQUIREMENTS NEEDS TO BE PROVIDED IN COMPLIANCE THROUGHOUT THIS PROJECT. THOSE REQUIREMENTS WILL BE MEET THROUGH THE APPROPRIATE MEANS NECESSARY AND WILL BE DEVELOPED AND FINALIZED DURING THE CONSTRUCTION DOCUMENT PHASE.
2. BUILDING IS CLASSIFIED AS R-2 AND EQUIPPED WITH AN AUTOMATIC SPRINKLER SYSTEM.
3. TO BE TYPE II-B NON COMBUSTIBLE CONSTRUCTION. 1-HR FIRE PARTITION FOR CORRIDORS AND FOR DWELLING UNIT SEPARATIONS. 1-HR FIRE SEPARATION BETWEEN GARAGE AND RESIDENTIAL.

NORTH

SITE PLAN
RE-SUBMITTAL
04/28/2022

RLC Architects
14 SE 4th Street, Boca Raton, FL 33432
P: 561.395.0225 Fax: 561.395.6007
Web www.rlcarchitects.com

COPYRIGHT RLC ARCHITECTS, P.A. 2017
STATE of FLORIDA REGISTERED ARCHITECTS No. AA26001060
THE DRAWINGS AND ALL THE IDEAS, ARRANGEMENTS, DESIGNS AND PLANS INDICATED OR REPRESENTED BY THESE DRAWINGS AND SPECIFICATIONS REMAIN THE PROPERTY OF RLC ARCHITECTS, P.A. AND NO PART THEREOF SHALL BE CONVEYED OR DISCLOSED TO OTHERS OR USED FOR ANY PURPOSE WHATSOEVER EXCEPT WITH THE SPECIFIC WRITTEN PERMISSION OF RLC ARCHITECTS, P.A.

STATE OF FLORIDA
2022-04-27 12:08:16-04:00
AR0009566
BRUCE W. RETZSCH

CONSULTANT
INFO/LOGO

DELRAY CENTRAL
MASTER PLAN
1625 SOUTH CONGRESS

REVISIONS

Drawing Title
8TH FLOOR PLAN

Scale
Project No. 20112.00
Plot Date 04/28/2022

Principal: JC
Project Director:
Project Manager:
Drafted by: MGC
Checked by:

Sheet No.
A1.08

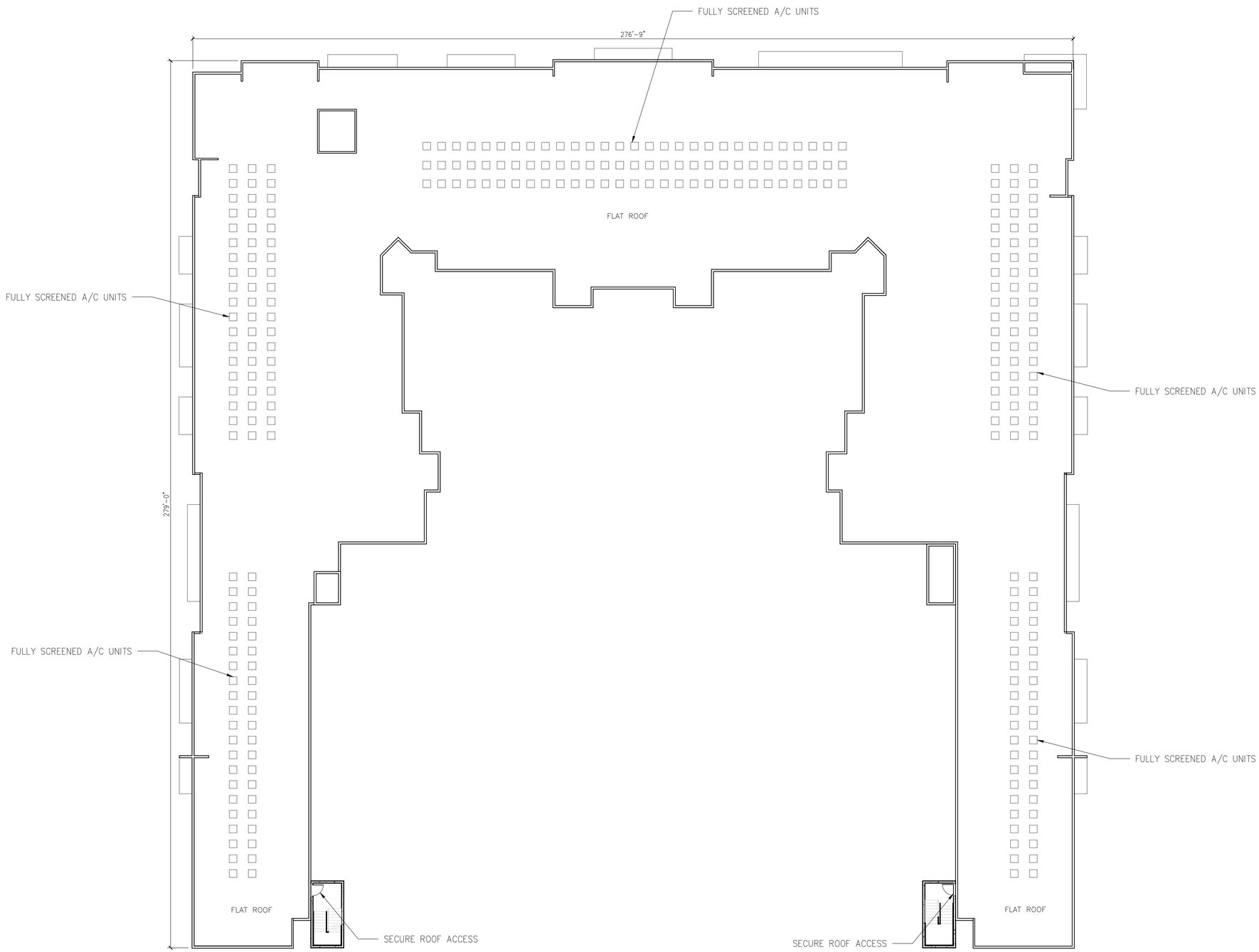

1 ROOF PLAN

A1.09 SCALE: 1/16"=1'-0"

NORTH

SITE PLAN
RE-SUBMITTAL
04/28/2022

RLC Architects
14 SE 4th Street, Boca Raton, FL 33432
Tel 561.395.0555 Fax 561.395.6007
Web www.rlcarchitects.com

COPYRIGHT RLC ARCHITECTS, P.A. 2017
STATE of FLORIDA REGISTERED ARCHITECTS No. AA26001060

THE DRAWINGS AND ALL THE IDEAS, ARRANGEMENTS, DESIGNS AND PLANS INDICATED OR REPRESENTED BY THESE DRAWINGS AND PLANS ARE AND SHALL REMAIN THE PROPERTY OF RLC ARCHITECTS, P.A. AND NO PART THEREOF SHALL BE USED FOR ANY PURPOSE NOT SPECIFICALLY PERTAINING TO THIS PROJECT WITHOUT THE SPECIFIC WRITTEN PERMISSION OF RLC ARCHITECTS, P.A.

STATE OF FLORIDA
2022-04-27 12:08:19-04'00'
AR0009566
REGISTERED ARCHITECT
BRUCE W. RETZSCH

CONSULTANT INFO/LOGO

DELRAY CENTRAL MASTER PLAN

1625 SOUTH CONGRESS

REVISIONS

Drawing Title
ROOF PLAN

Scale
Project No. 20112.00
Plot Date 04/28/2022

Principal: JC
Project Director:
Project Manager:
Drafted by: MGC
Checked by:

Sheet No.
A1.09

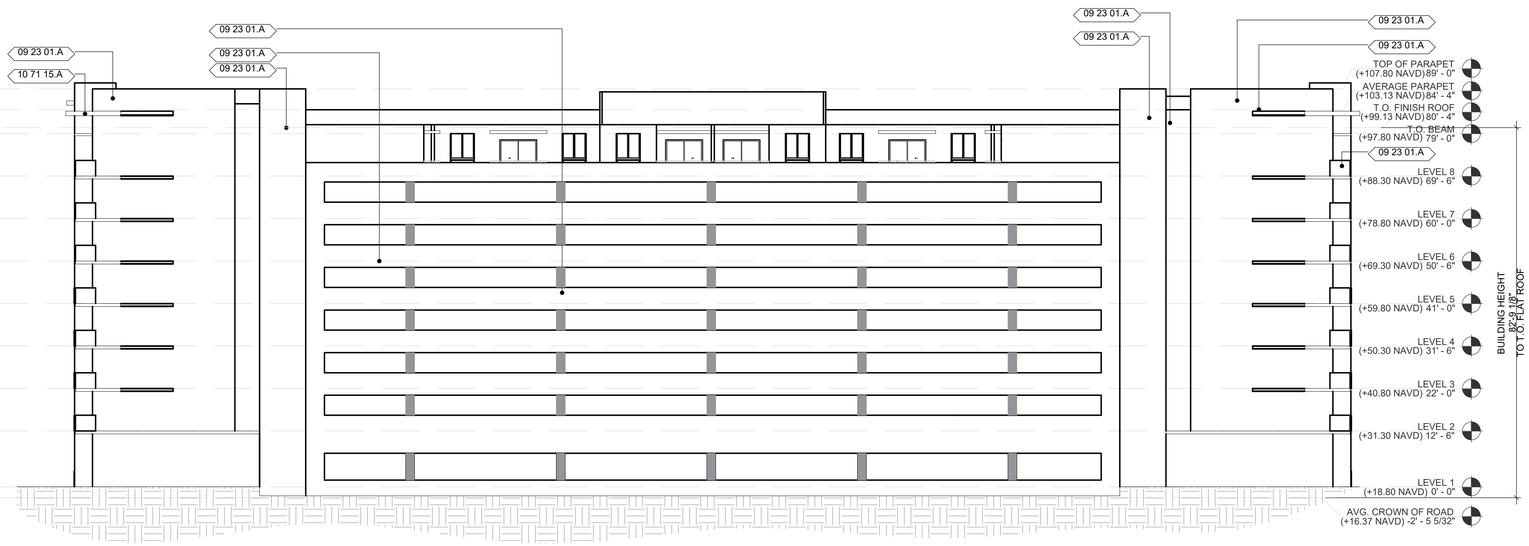

2 EAST BUILDING ELEVATIONS

A3.00 SCALE: 1/16"=1-0"

1 WEST BUILDING ELEVATION

A3.00 SCALE: 1/16"=1-0"

KEYNOTE LEGEND

05 73 16.A	HORIZONTAL METAL RAILINGS
08 41 01.A	IMPACT RESISTANT ALUM. STOREFRONT DOOR
08 41 13.A	IMPACT RESISTANT ALUM. STOREFRONT W/ TINTED GLASS
08 41 16.A	IMPACT RESISTANT ALUM. OPERABLE WINDOW W/ CLEAR GLASS
08 41 17.A	IMPACT RESISTANT ALUM. SLIDING DOOR
09 23 01.A	SMOOTH PAINTED STUCCO FINISH
09 24 00.A	SLATE CLADDING
10 71 15.A	FIXED CONCRETE CANOPY

SITE PLAN
RE-SUBMITTAL
04/28/2022

RLC Architects
14 SE 4th Street, Boca Raton, FL 33432
P 561.395.0225 F 561.395.6007
Web www.rlcarchitects.com

COPYRIGHT RLC ARCHITECTS, P.A. 2017
STATE of FLORIDA REGISTERED ARCHITECTS No. AA26001060
THE DRAWINGS AND ALL THE IDEAS, ARRANGEMENTS, DESIGNS AND PLANS INDICATED OR REPRESENTED BY THESE DRAWINGS AND SPECIFICATIONS REMAIN THE PROPERTY OF RLC ARCHITECTS, P.A. AND NO PART THEREOF SHALL BE USED FOR ANY PURPOSE NOT SPECIFICALLY PERTAINING TO THIS PROJECT WITHOUT THE WRITTEN PERMISSION OF RLC ARCHITECTS, P.A.

STATE OF FLORIDA
2022.04.27 12:08:22-04'00'
AR0009566
REGISTERED ARCHITECT
BRUCE W. RETZSCH

CONSULTANT INFO/LOGO

DELRAY CENTRAL MASTER PLAN

1625 SOUTH CONGRESS

REVISIONS

Drawing Title
BUILDING ELEVATIONS

Scale
Project No. 20112.00
Plot Date 04/28/2022

Principal: JC
Project Director:
Project Manager:
Drafted by: MGC
Checked by:

Sheet No.
A3.00

2 SOUTH BUILDING ELEVATIONS

A3.10 SCALE: 1/16"=1-0"

1 NORTH BUILDING ELEVATION

A3.10 SCALE: 1/16"=1-0"

KEYNOTE LEGEND

05 73 16.A	HORIZONTAL METAL RAILINGS
08 41 01.A	IMPACT RESISTANT ALUM. STOREFRONT DOOR
08 41 13.A	IMPACT RESISTANT ALUM. STOREFRONT W/ TINTED GLASS
08 41 16.A	IMPACT RESISTANT ALUM. OPERABLE WINDOW W/ CLEAR GLASS
08 41 17.A	IMPACT RESISTANT ALUM. SLIDING DOOR
09 23 01.A	SMOOTH PAINTED STUCCO FINISH
09 24 00.A	SLATE CLADDING
10 71 15.A	FIXED CONCRETE CANOPY

RLC Architects
14 SE 4th Street, Boca Raton, FL 33432
P: 561.395.1555 F: 561.395.6007
Web www.rlcarchitects.com

COPYRIGHT RLC ARCHITECTS, P.A. 2017
STATE of FLORIDA REGISTERED ARCHITECTS No. AA26001060

THE DRAWINGS AND ALL THE IDEAS, ARRANGEMENTS, DESIGNS AND PLANS INDICATED OR REPRESENTED BY THESE DRAWINGS AND SPECIFICATIONS REMAIN THE PROPERTY OF RLC ARCHITECTS, P.A. AND NO PART THEREOF SHALL BE CONVEYED OR DISCLOSED TO OTHERS OR BE USED FOR ANY PURPOSE WHATSOEVER EXCEPT WITH THE SPECIFIC WRITTEN PERMISSION OF RLC ARCHITECTS, P.A.

STATE OF FLORIDA
2022-04-27 12:08:26-04'00'
AR0009566
LICENSED ARCHITECT
BRUCE W. RETZSCH

CONSULTANT INFO/LOGO

DELRAY CENTRAL MASTER PLAN

1625 SOUTH CONGRESS

REVISIONS

Drawing Title
BUILDING ELEVATIONS

Scale
Project No. 20112.00
Plot Date 04/28/2022

Principal: JC
Project Director:
Project Manager:
Drafted by: MGC
Checked by:

Sheet No.
A3.10

SITE PLAN RE-SUBMITTAL 04/28/2022

3 BUILDING SECTION B

A3.20 SCALE: 1/16"=1-0"

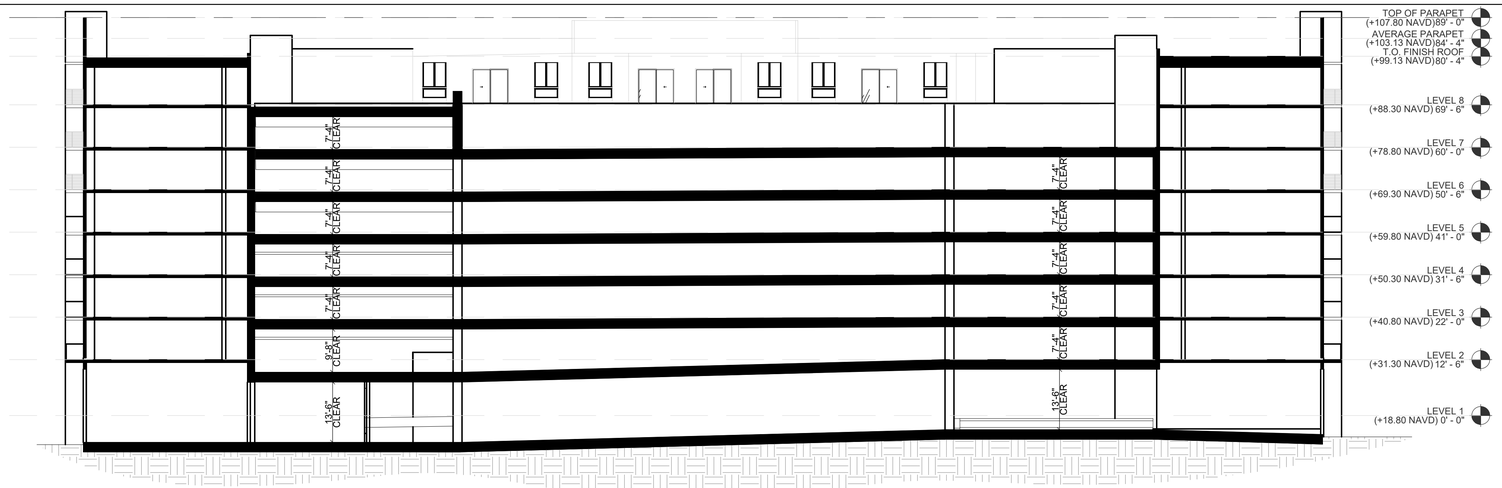

2 BUILDING SECTION A

A3.20 SCALE: 1/16"=1-0"

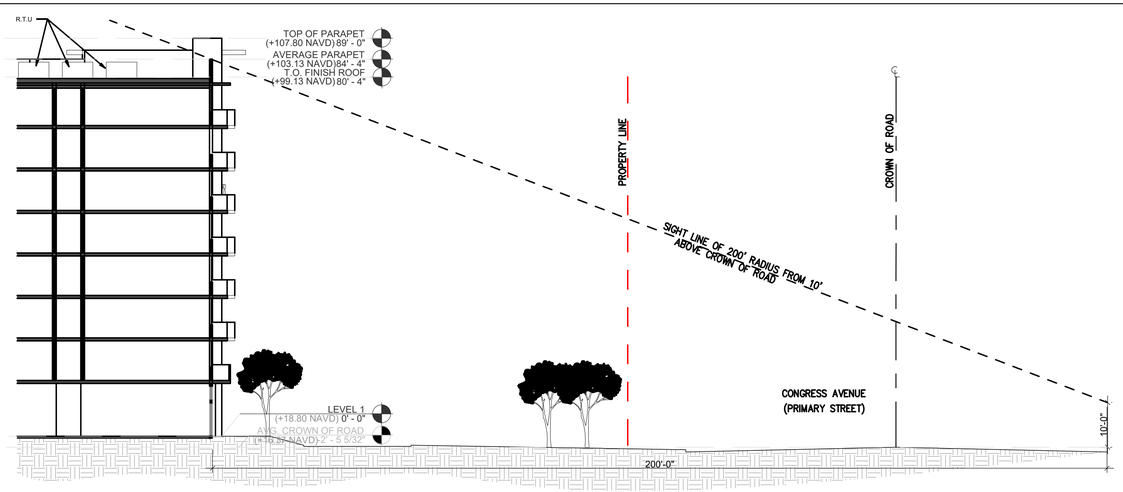

1 MECHANICAL SCREENING SECTION

A3.20 SCALE: 1/16"=1-0"

SITE PLAN
RE-SUBMITTAL
04/28/2022

RLC Architects
14 SE 4th Street, Boca Raton, FL 33432
Tel 561.395.1555 Fax 561.395.6007
Web www.rlcarchitects.com

COPYRIGHT RLC ARCHITECTS, P.A. 2017
STATE of FLORIDA REGISTERED ARCHITECTS No. AA26001060
THE DRAWINGS AND ALL THE IDEAS, ARRANGEMENTS, DESIGNS AND PLANS INDICATED OR REPRESENTED BY THESE DRAWINGS, WHICH ARE PROPRIETARY, REMAIN THE PROPERTY OF RLC ARCHITECTS, P.A. AND NO PART THEREOF SHALL BE COPIED, DISCLOSED TO OTHERS OR USED IN CONNECTION WITH ANY WORK OR PURPOSE WHATSOEVER EXCEPT WITH THE SPECIFIC WRITTEN PERMISSION OF RLC ARCHITECTS, P.A.

STATE OF FLORIDA
2022-04-27 12:08:29-04'00'
AR0009566
LICENSED ARCHITECT
BRUCE W. RETZSCH

CONSULTANT INFO/LOGO

DELRAY CENTRAL MASTER PLAN

1625 SOUTH CONGRESS

REVISIONS

Drawing Title
BUILDING SECTIONS

Scale
Project No. 20112.00
Plot Date 04/28/2022

Principal: JC
Project Director:
Project Manager:
Drafted by: MGC
Checked by:

Sheet No.
A3.20

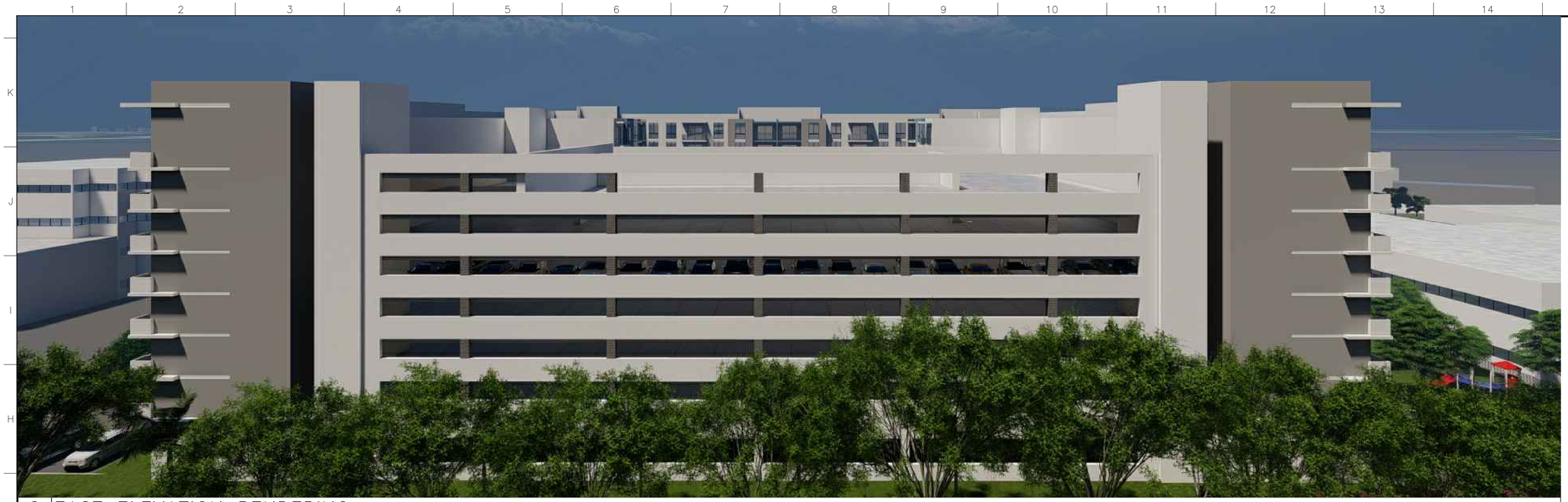

2 EAST ELEVATION RENDERING

A4.00 SCALE: N/A

1 WEST ELEVATION RENDERING

A4.00 SCALE: N/A

SITE PLAN
RE-SUBMITTAL
04/28/2022

RLC Architects
14 SE 4th Street, Boca Raton, FL 33432
P 561.395.0225 F 561.395.6007
Web www.rlcarchitects.com

COPYRIGHT RLC ARCHITECTS, P.A. 2017
STATE of FLORIDA REGISTERED ARCHITECTS No. AA26001060
THE DRAWINGS AND ALL THE IDEAS, ARRANGEMENTS, DESIGNS AND PLANS INDICATED OR REPRESENTED BY THESE DRAWINGS AND PLANS ARE AND SHALL REMAIN THE PROPERTY OF RLC ARCHITECTS, P.A. AND NO PART THEREOF SHALL BE USED FOR ANY PURPOSE OTHER THAN THE PROJECT FOR WHICH IT IS PROVIDED, NOR SHALL ANY PURPOSE WHATSOEVER EXCEPT WITH THE SPECIFIC WRITTEN PERMISSION OF RLC ARCHITECTS, P.A.

STATE OF FLORIDA
2022-04-27 12:08:32+00:00
AR0009566
LICENSED ARCHITECT
BRUCE W. RETZSCH

CONSULTANT INFO/LOGO

DELRAY CENTRAL MASTER PLAN

1625 SOUTH CONGRESS

REVISIONS

Drawing Title
RENDERINGS

Scale
Project No. 20112.00
Plot Date 04/28/2022

Principal: JC
Project Director:
Project Manager:
Drafted by: MGC
Checked by:

Sheet No.
A4.00

2 NORTH EAST ELEVATION RENDERING

A4.01 SCALE: N/A

1 NORTH WEST ELEVATION RENDERING

A4.01 SCALE: N/A

SITE PLAN
RE-SUBMITTAL
04/28/2022

RLC Architects
14 SE 4th Street, Boca Raton, FL 33432
561.395.0225 Fax: 561.395.6007
Web www.rlcarchitects.com

COPYRIGHT RLC ARCHITECTS, P.A. 2017
STATE of FLORIDA REGISTERED ARCHITECTS No. AA26001060

THE DRAWINGS AND ALL THE IDEAS, ARRANGEMENTS, DESIGNS AND PLANS INDICATED OR REPRESENTED BY THESE DRAWINGS AND PLANS, SHALL AT ALL TIMES REMAIN THE PROPERTY OF RLC ARCHITECTS, P.A. AND NO PART THEREOF SHALL BE USED BY ANY PERSON OR ENTITY FOR ANY PURPOSE OR ON ANY OTHER PROJECT PURPOSE WHATSOEVER EXCEPT WITH THE SPECIFIC WRITTEN PERMISSION OF RLC ARCHITECTS, P.A.

STATE OF FLORIDA
2022-04-27 12:08:36-04'00'
AR0009566
REGISTERED ARCHITECT
BRUCE W. RETZSCH

CONSULTANT
INFO/LOGO

DELRAY CENTRAL
MASTER PLAN

1625 SOUTH CONGRESS

REVISIONS

Drawing Title
RENDERINGS

Scale
Project No. 20112.00
Plot Date 04/28/2022

Principal: JC
Project Director:
Project Manager:
Drafted by: MGC
Checked by:

Sheet No.
A4.01

1 SOUTH WEST ELEVATION RENDERING

A4.02 SCALE: N/A

SITE PLAN
RE-SUBMITTAL
04/28/2022

RLC Architects
14 SE 4th Street, Boca Raton, FL 33432
Tel 561.395.0225 Fax 561.395.6007
Web www.rlcarchitects.com

COPYRIGHT RLC ARCHITECTS, P.A. 2017
STATE of FLORIDA REGISTERED ARCHITECTS No. AA26001060

THE DRAWINGS AND ALL THE IDEAS, ARRANGEMENTS, DESIGNS AND PLANS INDICATED OR REPRESENTED BY THESE DRAWINGS AND PLANS ARE AND SHALL REMAIN THE PROPERTY OF RLC ARCHITECTS, P.A. AND NO PART THEREOF SHALL BE USED FOR ANY PURPOSE NOT SPECIFICALLY PERMITTED BY THIS PURPOSE WHATSOEVER EXCEPT WITH THE SPECIFIC WRITTEN PERMISSION OF RLC ARCHITECTS, P.A.

STATE OF FLORIDA
2022-04-27 12:08:39-04:00
AR0009566
LICENSED ARCHITECT
BRUCE W. RETZSCH

CONSULTANT INFO/LOGO

DELRAY CENTRAL MASTER PLAN

1625 SOUTH CONGRESS

REVISIONS

Drawing Title
RENDERINGS

Scale
Project No. 20112.00
Plot Date 04/28/2022

Principal: JC
Project Director:
Project Manager:
Drafted by: MGC
Checked by:

Sheet No.
A4.02

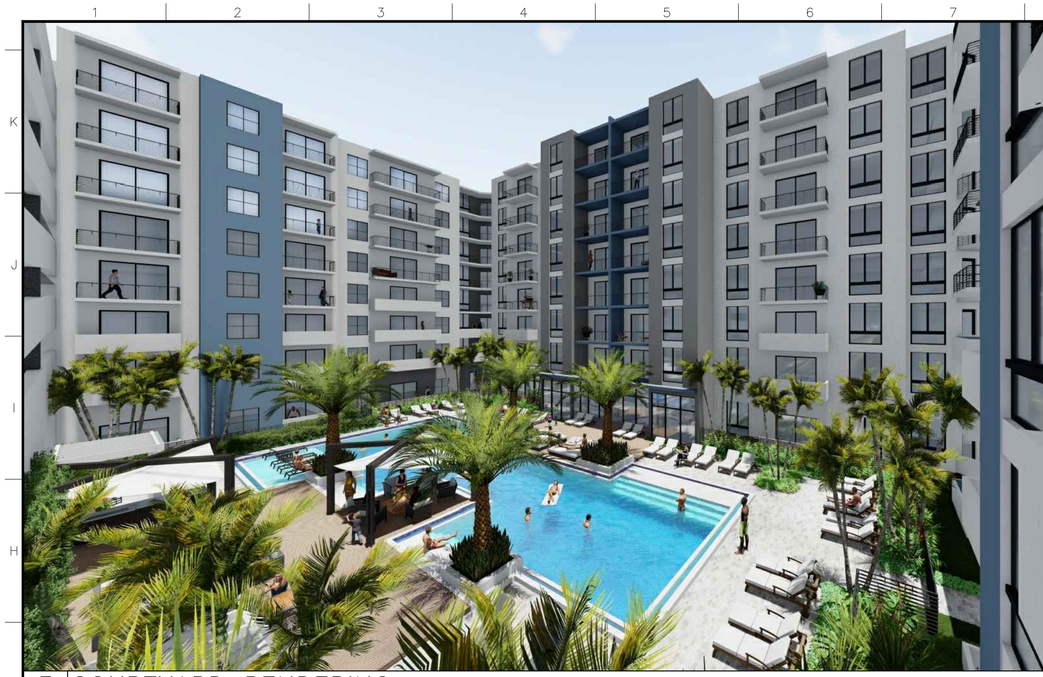

3 COURTYARD RENDERING

A4.03 SCALE: N/A

2 COURTYARD RENDERING

A4.03 SCALE: N/A

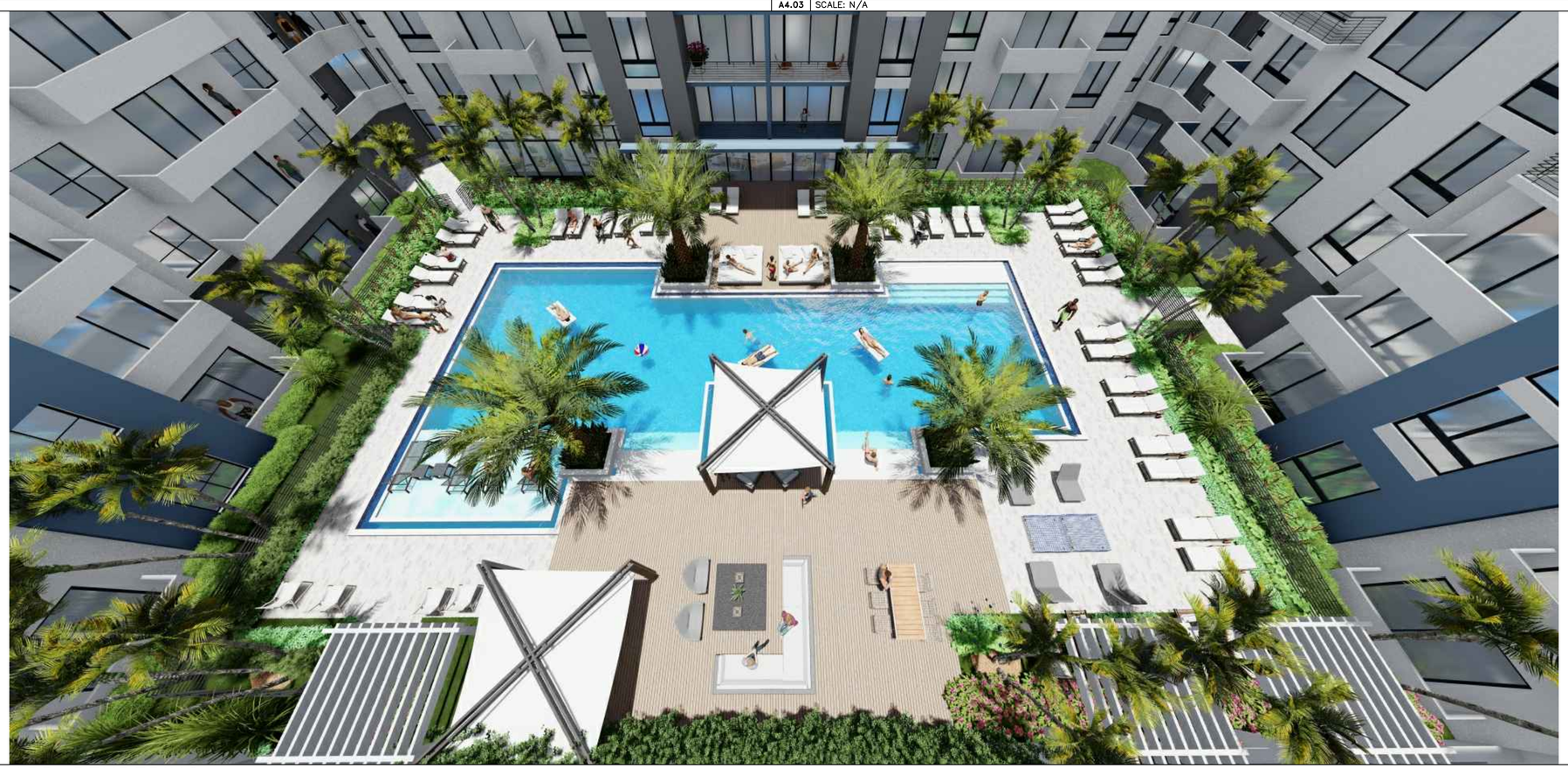

1 COURTYARD RENDERING

A4.03 SCALE: N/A

SITE PLAN
RE-SUBMITTAL
04/28/2022

RLC Architects
14 SE 4th Street, Boca Raton, FL 33432
P 561.395.1555 F 561.395.6007
Web www.rlcarchitects.com

COPYRIGHT RLC ARCHITECTS, P.A. 2017
STATE of FLORIDA REGISTERED ARCHITECTS No. AA26001060

THE DRAWINGS AND ALL THE IDEAS, ARRANGEMENTS, DESIGNS AND PLANS INDICATED OR REPRESENTED THEREIN, EXCEPT WHAT MAY BE OTHERWISE REMAIN THE PROPERTY OF RLC ARCHITECTS, P.A. AND NO PART THEREOF SHALL BE USED FOR ANY PURPOSE WHATSOEVER EXCEPT WITH THE SPECIFIC WRITTEN PERMISSION OF RLC ARCHITECTS, P.A.

STATE OF FLORIDA
2022-04-28 12:08:43-04'00'
AR0009566
LICENSED ARCHITECT
BRUCE W. RETZSCH

CONSULTANT INFO/LOGO

DELRAY CENTRAL MASTER PLAN

1625 SOUTH CONGRESS

REVISIONS

Drawing Title
COURTYARD RENDERINGS

Scale
Project No. 20112.00
Plot Date 04/28/2022

Principal: JC
Project Director:
Project Manager:
Drafted by: MGC
Checked by:

Sheet No.
A4.03