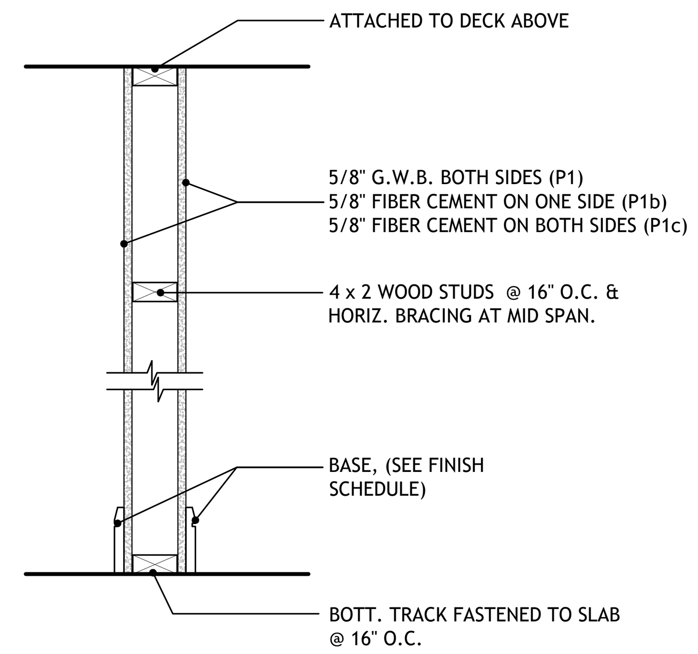

P1(BC) PARTITION

INTERIOR WALL

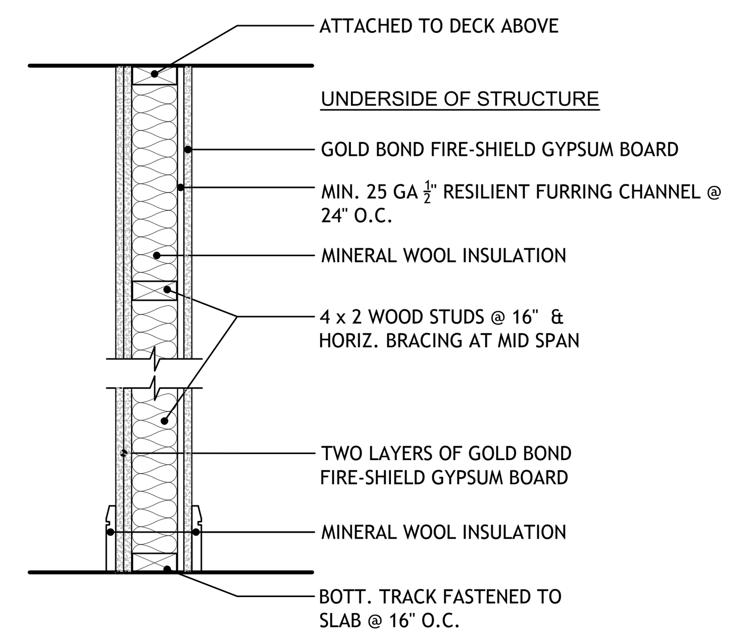

P2 PARTITION (1HR RATED)

INTERIOR WALL (UL DESIGN U305)

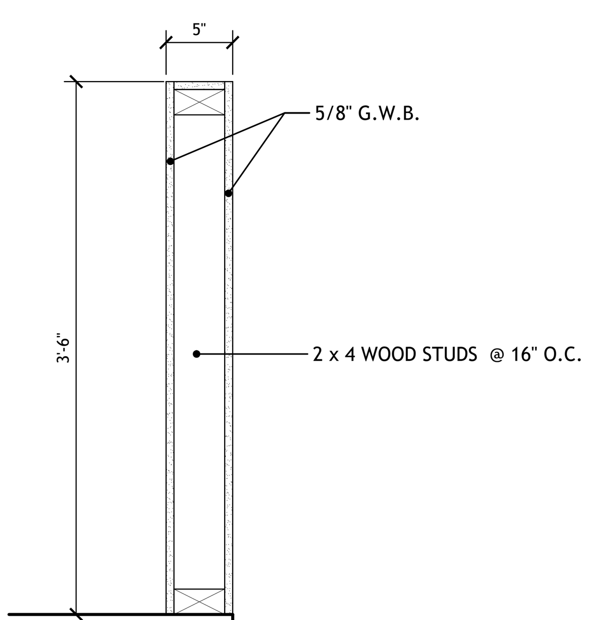

P4 LOW WALL

INTERIOR WALL

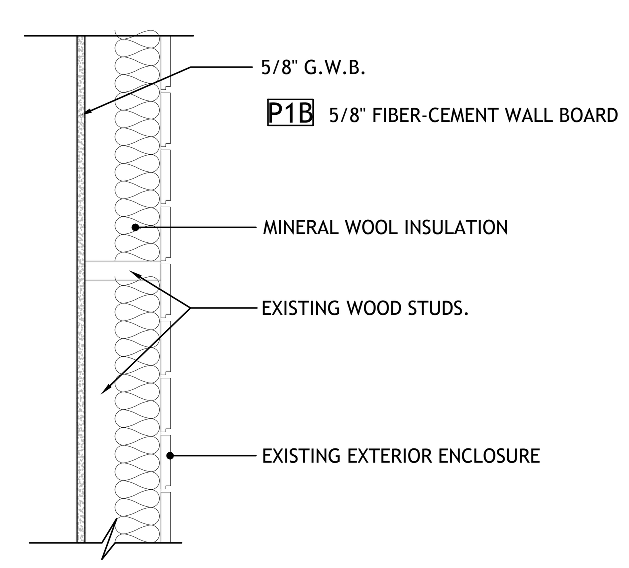

P3(B) INTERIOR FURRING

INTERIOR WALL

ALL FIRE-RATED WALLS EXTEND UP CONT. FROM FLOOR SLAB TO UNDERSIDE OF ROOF DECK. FILL ALL CAVITIES W/ APPROVED FIRE-SAFETY INSULATION & SEALANT. AT ALL NON-FIRE-RATED WALLS, EXTEND G.W.B. TO (6") ABOVE LEVEL OF THE ADJACENT CEILING FINISH, TYP. U.N.O.

G.C. TO FOLLOW MANUFACTURE'S PUBLISHED INSTRUCTIONS FOR THE INSTALLATION OF : METAL FRAMING & FURRING, INSULATION, CERAMIC OR PORCELIN TILE, GYPSUM WALL BOARD, CEMENTITIOUS BACKER BOARD, VAPOR BARRIER, TEMPERED GLASS WINDOW, WALL AND/OR OTHER SYSTEMS ASSOCIATED WITH THE CONSTRUCTION OF ALL WALLS.

G.C. TO COMPLETELY COORDINATE THE INSTALLATION OF ALL SYSTEMS (INCLUDING BUT NOT LIMITED TO WIRING, CONDUIT, PIPES, CONNECTIONS AND/OR EQUIPMENT) WHICH ARE TO BE INTEGRATED INTO THE CONSTUCTION OF ALL WALLS. DO NOT INTERRUPT THE STRUCTURAL CONTINUITY OF ANY WALL AND NOTIFY THE ARCHITECT AND ENGINEERS OF ANY CONFLICTS BEFORE PROCEEDING.

SUB-CONTRACOR SHALL INSTALL ALL REQUIRED BLOCKING WITH IN WALLS WHETHER SPECIFICALLY NOTED IN THIS SET OR IMPLIED DUE TO THE EQPT SPECED. IT IS THE SUB-CONTRACTORS RESPONSIBILITY TO REVIEW ALL DISCIPLINES AND IDENTIFY ALL AREAS THAT SHALL REQUIRE 2X6 FIRE TREATED WOOD BLOCKING.

G.C. AND FRAMING SUB-CONTRACTOR TO INSTALL ADDITIONAL FRAME BRACING BEHIND OR SURROUNDING ALL WALL SURFACE OR RECESS- MOUNTED EQUIPMENT OR TRIM, AND ALL GENERAL FRAME BRACING, TOP AND BOTTOM TRACKS, INTERMEDIATE BRACING, ATTACHMENTS, CONNECTORS AND ANCHORS PER MFR'S INSTRUCTIONS AND AS REQUIRED BY THE STRUCTURAL DWGS.

G.C. TO VERIFY (PRIOR TO ANY ORDERING OR INSTALLATION) THE EXACT TYPE AND COLOR OR PATTERNS OF ALL FINISHES, TRIM AND FIXTURES WITH THE ARCHITECT AS APPROVED BY OWNER.

ANY "STUCCO" (LABELED ABOVE) MAY VARY IN COMPOSITION AND PROFILE DUE TO E.I.F.S. DESIGNED FOR CERTAIN AREAS. SEE ELEVATIONS FOR LOCATIONS. G.C. TO COORDINATE.

INSTALL MOISTURE-RESISTANT (M.R.) GYPSUM WALL BD. @ SIDE OF PARTITION FACING ANY "WET" OR "DAMP" AREAS. "WET" AREAS INCLUDE: SHOWER STALLS, SHOWER AREAS, SPA ROOMS, HYDRO-THERAPY ROOM. "DAMP" AREAS INCLUDE: TOILET STALLS, TOILET ROOMS, SINK ROOMS, SINK/ VANITY ALCOVE SURROUNDING WALLS AND THE LAUNDRY ROOM.

WHEN STUCCO IS APPLIED TO A VERTICAL SURFACE, THE CONTRACTOR SHALL INSTALL STUCCO CONTROL JOINTS AS INDICATED IN THE CONTRACT DOCUMENTS AND AS OTHERWISE NECESSARY ON A REGULAR GRID NOT EXCEEDING 140 SF, AS APPROVED BY THE ARCHITECT. WHEN STUCCO IS APPLIED TO A HORIZONTAL SURFACE, THE CONTRACTOR SHALL INSTALL STUCCO CONTROL JOINTS AS INDICATED IN THE CONTRACT DOCUMENTS AND AS OTHERWISE NECESSARY ON A REGULAR GRID NOT EXCEEDING 100 SF, AS APPROVED BY THE ARCHITECT.

WHERE INTERIOR GYP BRD SHALL RECEIVE WALL COVERING, A LEVEL 4 FINISH SHALL BE APPLIED.

WALL TYPE NOTES

UL DESIGN NO. L570 2

FIRE RATING:	1 HOUR	IIC:	57
STC:	59	SOUND TEST:	H5048.04
SOUND TEST:	H5048.04		
SYSTEM THICKNESS:	1' 4 3/32"		

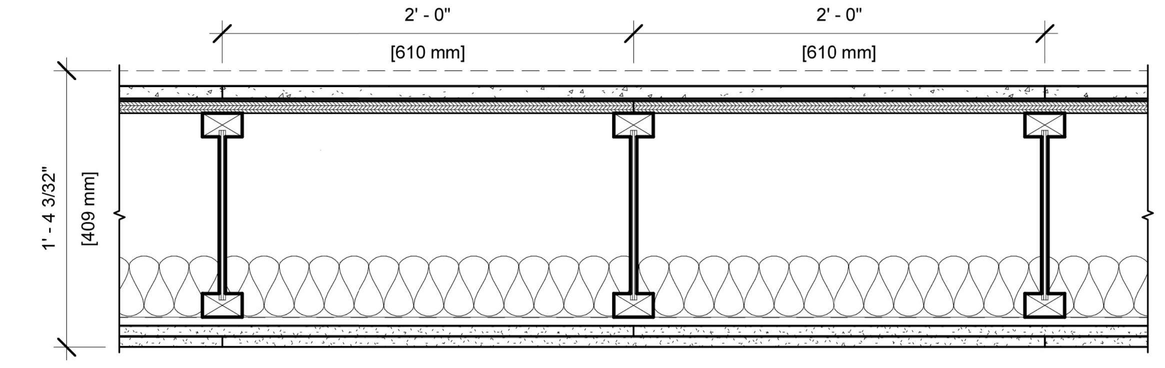

ASSEMBLY OPTIONS:

FINISH FLOORING:	ENGINEERED HARDWOOD (BY OTHERS)
FLOOR TOPPING MIXTURE:	3/4" USG LEVELROCK® BRAND 2500 SERIES UNDERLAYMENT
FLOOR MAT:	1/8" USG LEVELROCK® BRAND SAM-N12™ SOUND ATTENUATION MAT
SUBFLOORING:	23/32" PLYWOOD PANEL
STRUCTURAL WOOD MEMBERS:	11-7/8" WOOD I-JOISTS, SPACED 24" O.C.
INSULATION:	3-1/2" UNFACED GLASS FIBER
RESILIENT CHANNELS:	25 GA. RESILIENT CHANNELS SPACED 16" O.C. (SOUND TESTED WITH RC DELUXE®)
GYPSUM BOARD:	TWO LAYERS 5/8" USG SHEETROCK® BRAND ECOSMART PANELS FIRECODE® X (UL TYPE ULIX™)

Revit Sytem Family
(Copy & Paste into your Revit Project)

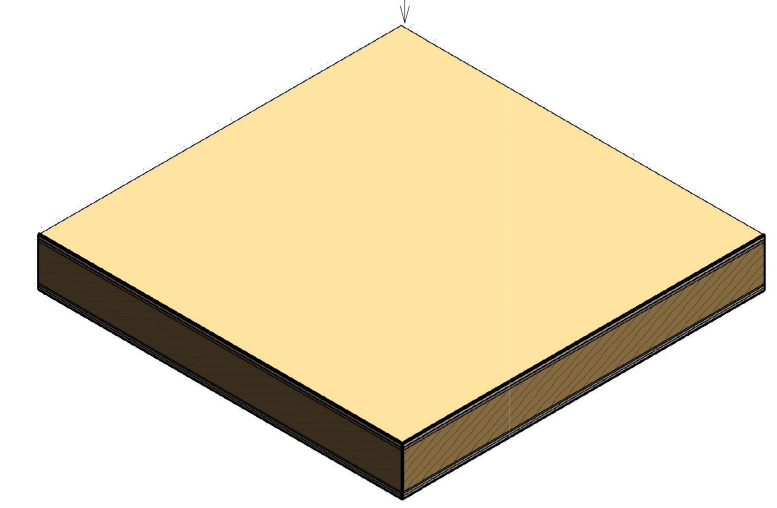

NOTES:

FOR THE MOST UP-TO-DATE INFORMATION OR ASSEMBLY OPTIONS, REFER TO THE UL FIRE RESISTANCE DIRECTORY.

REFER TO THE UL FIRE RESISTANCE DIRECTORY FOR INFORMATION REGARDING PRODUCT ORIENTATION AND FASTENING REQUIREMENTS.

USG CGC
USG Corporation
550 West Adams Street
Chicago, IL 60661 USA
WWW.USG.com
T. 800-USG4YOU

DISCLAIMER: THE USG PRODUCT INFORMATION CONTAINTED HEREIN ARE INTENDED FOR USE AS PRODUCT REFERENCE MATERIAL BY ARCHITECTS, ENGINEERS, AND OTHER DESIGN PROFESSIONALS, CONTRACTORS, BUILDING CODE OFFICIALS, OR OTHER COMPETENT CONSTRUCTION INDUSTRY TRADE PROFESSIONALS HAVING AN INTEREST IN THE SELECTION, SPECIFICATION, AND USE OF PRODUCTS MANUFACTURED BY THE SUBSIDIARIES OF USG CORPORATION. THE DRAWINGS ARE INTENDED SOLELY AS TECHNICAL SUPPORT INCIDENT TO THE SALE AND USE OF USG PRODUCTS AND NOT INTENDED TO BE A SUBSTITUTE FOR THE DESIGN REVIEW AND APPROVAL OF THE LICENSED DESIGN PROFESSIONALS FOR THE PROJECT. THESE MATERIALS MAY BE PRINTED AND/OR TRANSFERRED ELECTRONICALLY SOLELY AS NEEDED BY THE USER. BECAUSE CAD ELECTRONIC FILES AND BIM (BUILDING INFORMATION MODELING) FILES CAN BE MODIFIED BY OTHER PARTIES, WITHOUT NOTICE OR INDICATION OF SUCH MODIFICATIONS, MODIFICATION OF USG PRODUCT CAD DRAWINGS IS THE SOLE RESPONSIBILITY OF THE DESIGN PROFESSIONAL.

L570 System 2

ISSUE RECORD:

Revision	Date
0	5.24.20

SHEET INFORMATION: FC-WJ-1-06

EQUIPMENT PLAN 1
SCALE: 3/8"=1'

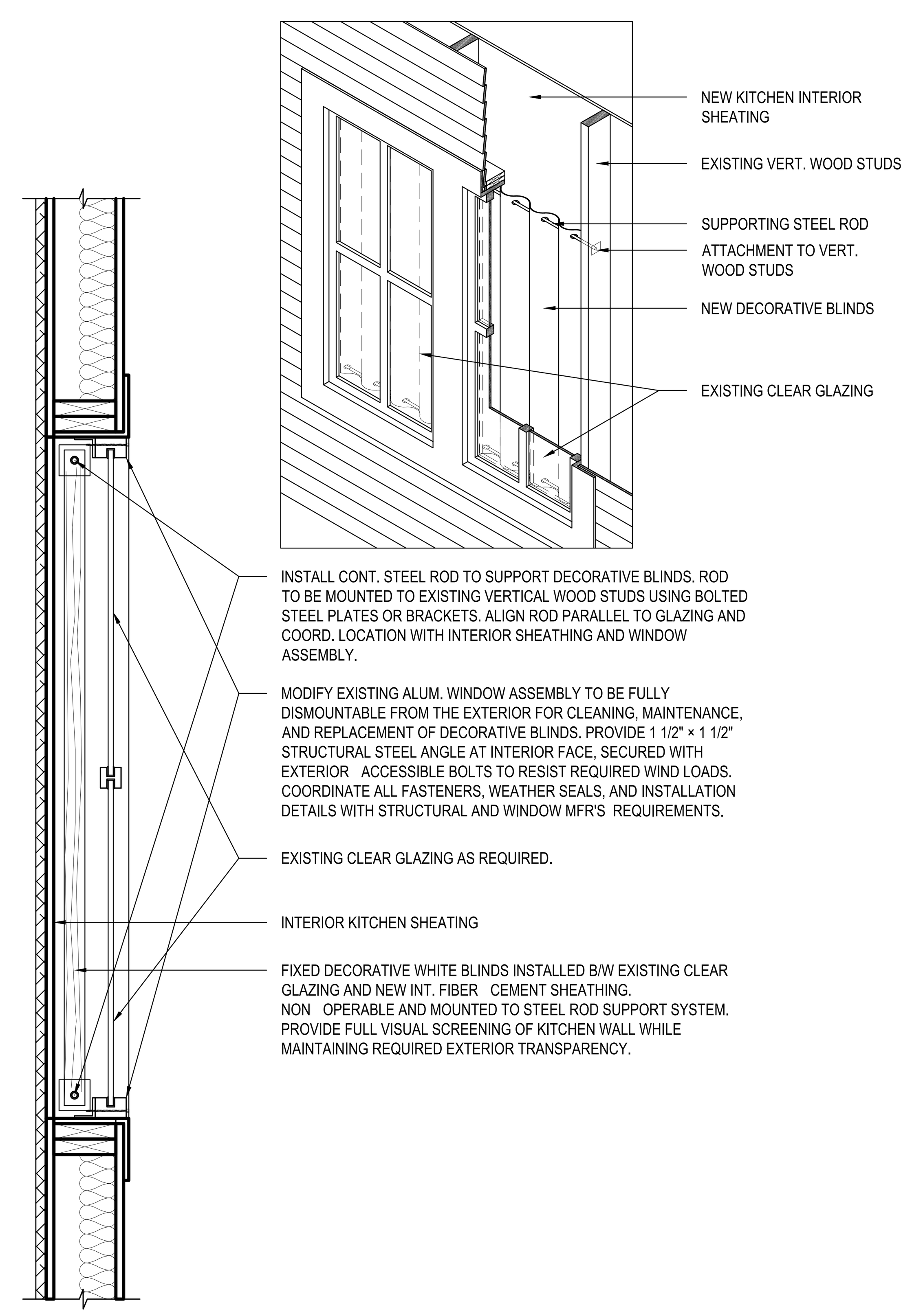

DECORATIVE BLINDS AT KITCHEN WINDOW DETAIL 2
SCALE: 1" = 1'

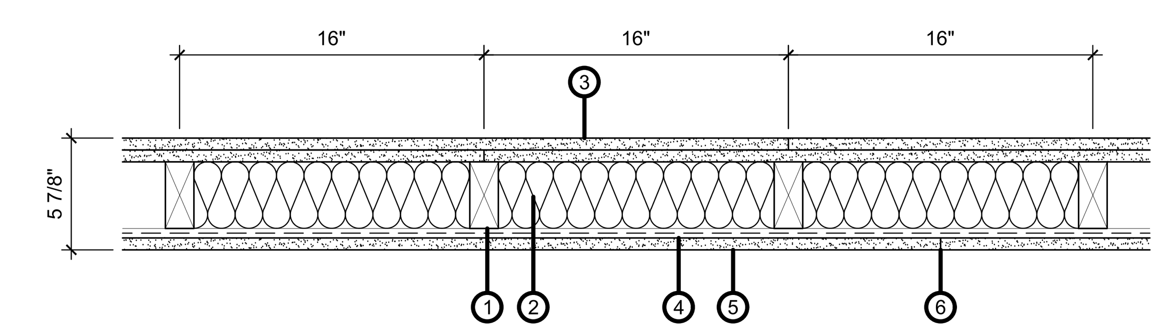

1. MIN. 2x4 WOOD STUDS 16" O.C.
2. 3-1/2" GLASS FIBER INSULATION
3. TWO LAYERS 5/8" GOLD BOND FIRE-SHIELD GYPSUM BOARD (FSW, FSW-C, FSW-6, eXP-C, SBWB, FSK, FSK-C) APPLIED VERTICALLY OR HORIZONTALLY. BASE LAYER FASTENED TO STUDS AND TRACKS WITH 1-7/8" 6d NAILS 7" O.C. OR 1-1/4" TYPE W SCREWS 8" O.C. FACE LAYER FASTENED WITH 2-3/8" NAILS 7" O.C. VERTICAL JOINTS CENTERED OVER STUDS AND STAGGERED 16" FROM OPPOSITE SIDE AND ADJACENT LAYERS. BASE LAYER HORIZONTAL JOINTS NEED NOT BE STAGGERED OR BACKED BY FRAMING. HORIZONTAL JOINTS IN ADJACENT LAYERS STAGGERED MIN. 12".
4. MIN. 25 GAUGE 1/2" RESILIENT FURRING CHANNELS (RC-1, RC-2) 24" O.C.
5. 5/8" GOLD BOND FIRE-SHIELD GYPSUM BOARD (FSW, FSW-C, FSW-6, eXP-C, FSK, FSK-C) APPLIED VERTICALLY AND FASTENED TO RESILIENT CHANNELS WITH 1" TYPE S SCREWS 8" O.C. VERTICAL JOINTS LOCATED MIDWAY BETWEEN STUDS AND STAGGERED 24" O.C. FROM OPPOSITE SIDE.
6. JOINT TAPE AND COMPOUND OVER JOINTS AND FASTENER HEADS (OPTIONAL WHEN SQUARE EDGE BOARD IS USED)

STC 55 - 2x4 WOOD STUDS — SOUND TEST: NGC 2011070

DATE: 07/01/2024	UL DESIGN: U305	National Gypsum
SCALE: 1-1/2"=1'-0"	LOADBEARING WOOD STUD PARTITION - 1 HOUR	

© 2024 National Gypsum Services Company

1-HR LOAD BEARING WOOD STUD PARITITION - UL DESIGN U305 1
SCALE: 1 1/2" = 1'

COPYRIGHT 2024 MADSEN DESIGN, ALL RIGHTS RESERVED

MADSEN DESIGN
▪ Architects
▪ Planners
▪ Interior Design
220 NE 11th St.
Boca Raton FL 33432
416 SE 5th St.
Delray Beach FL 33483
P: 561 - 749 - 1234
GREG MADSEN - AR92411

THE TACO STAND

22 W. ATLANTIC AVE,
DELRAY BEACH, FL 33444

SUBMITTALS:

PERMIT APP SET	MM/DD/20YY

WALL TYPES
UL ASSEMBLIES

A900

PROJECT NUMBER: 25-022

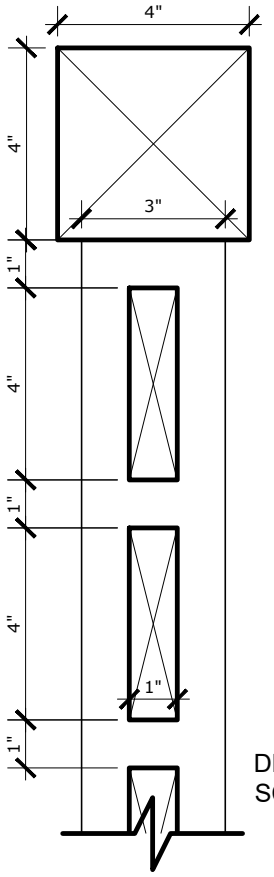

DETAIL
SCALE 3"=1'-0"

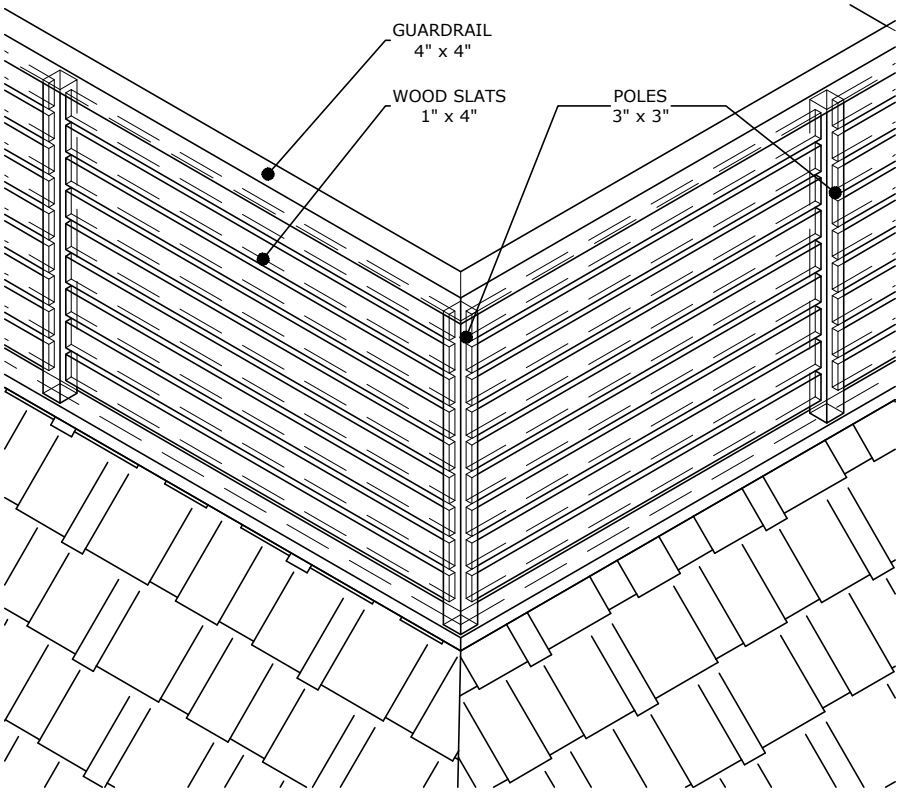

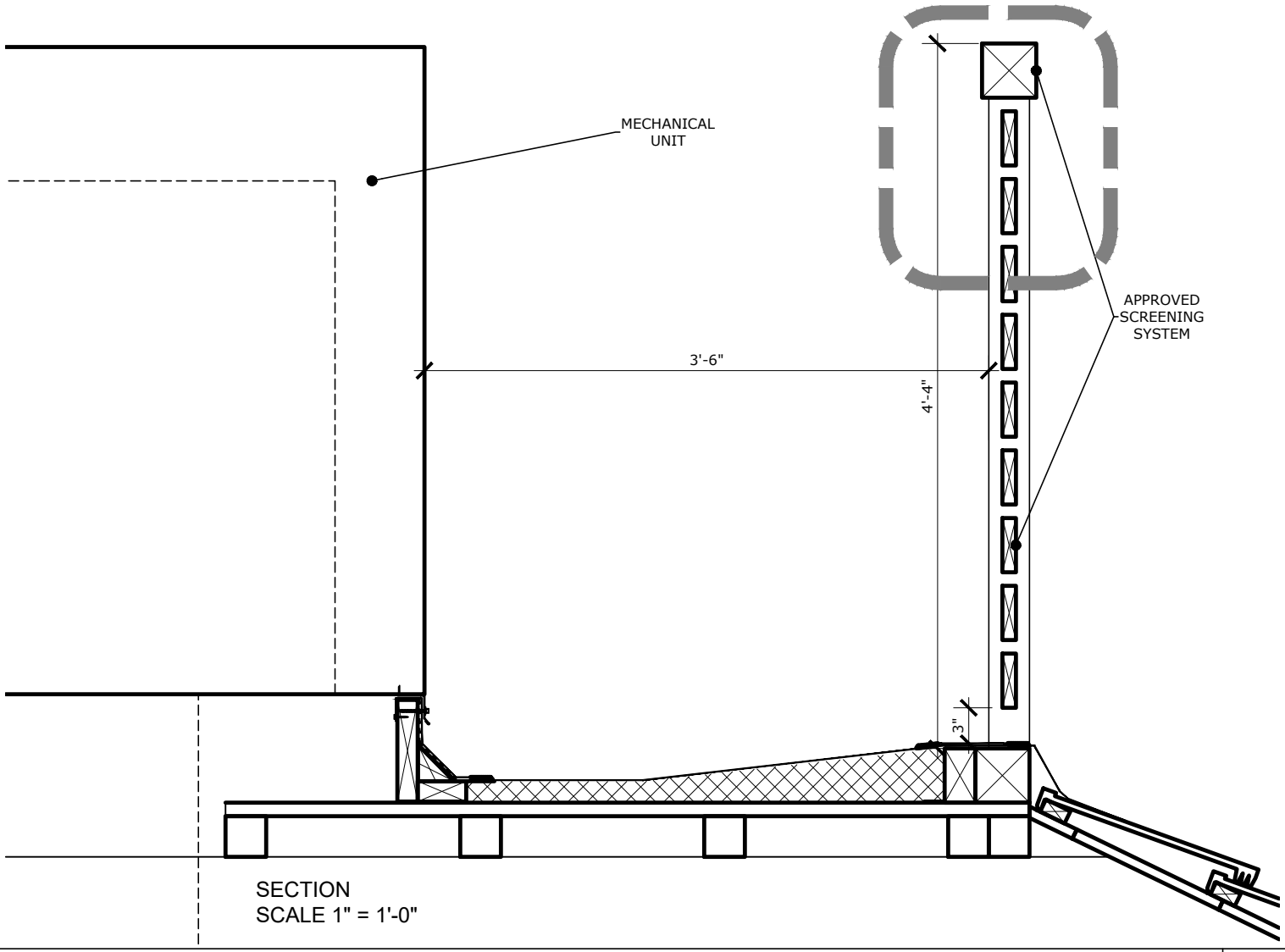

SECTION
SCALE 1" = 1'-0"

SCREENING DETAIL

SCALE: AS NOTED

1