Survey prepared by Pinnell Survey, Inc. Copyright © Jason H. Pinnell & Pinnell Survey, Inc.

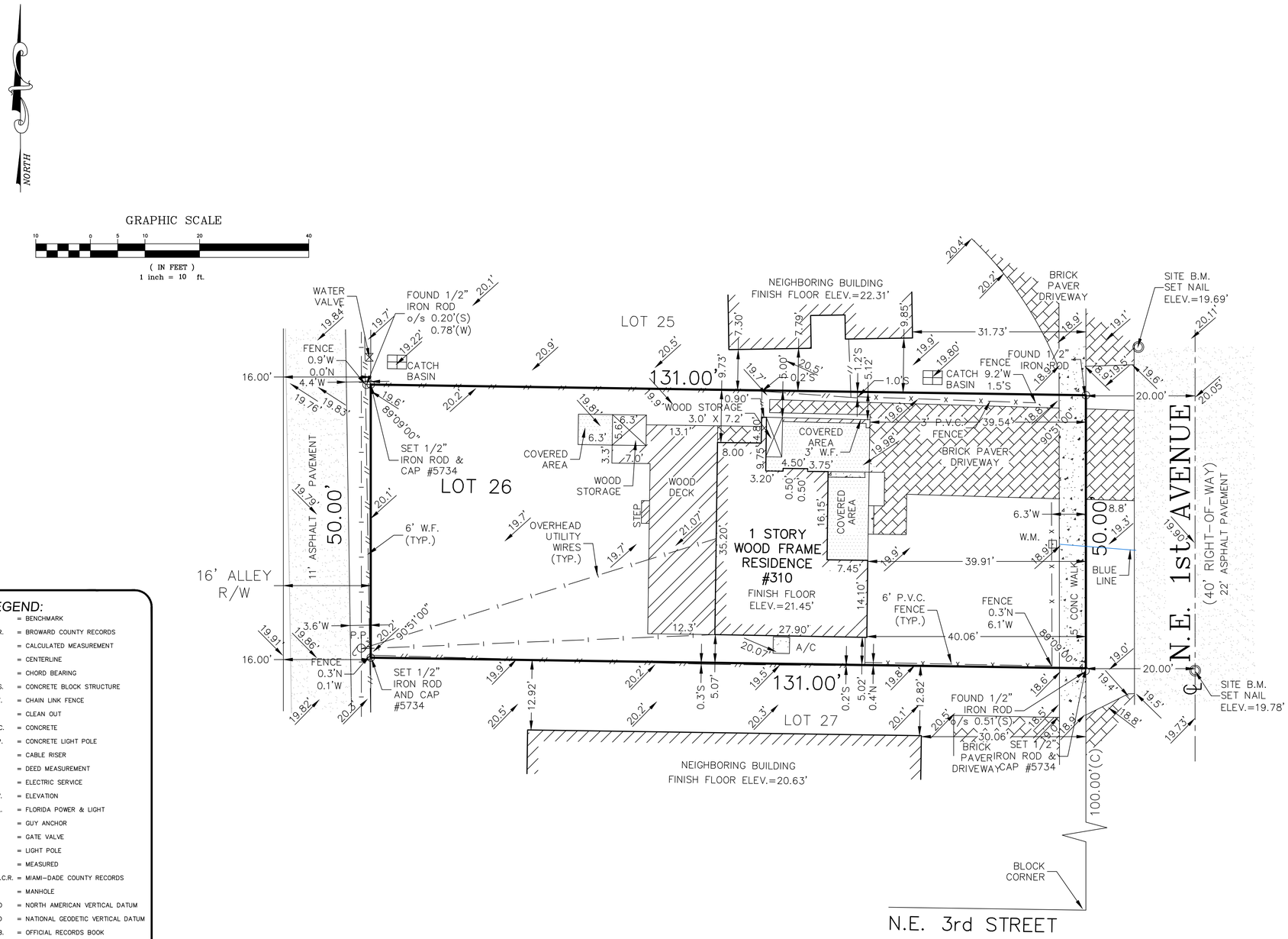

LEGEND:

B.M.	= BENCHMARK
B.C.R.	= BROWARD COUNTY RECORDS
C	= CALCULATED MEASUREMENT
℄	= CENTERLINE
C.B.	= CHORD BEARING
C.B.S.	= CONCRETE BLOCK STRUCTURE
C.L.F.	= CHAIN LINK FENCE
C.O.	= CLEAN OUT
CONC.	= CONCRETE
C.L.P.	= CONCRETE LIGHT POLE
C.R.	= CABLE RISER
D	= DEED MEASUREMENT
E.S.	= ELECTRIC SERVICE
ELEV.	= ELEVATION
F.P.L.	= FLORIDA POWER & LIGHT
G.A.	= GUY ANCHOR
G.V.	= GATE VALVE
L.P.	= LIGHT POLE
M	= MEASURED
M-D.C.R.	= MIAMI-DADE COUNTY RECORDS
M.H.	= MANHOLE
NAVD	= NORTH AMERICAN VERTICAL DATUM
NGVD	= NATIONAL GEODETIC VERTICAL DATUM
O.R.B.	= OFFICIAL RECORDS BOOK
P	= PLAT MEASUREMENT
P.B.	= PLAT BOOK
P.E.	= POOL EQUIPMENT
P.B.C.R.	= PALM BEACH COUNTY RECORDS
P.O.B.	= POINT OF BEGINNING
P.O.C.	= POINT OF COMMENCEMENT
TYP.	= TYPICAL
W.M.	= WATER METER
P.P.	= POWER POLE
A/C	= AIR CONDITIONING UNIT
o/s	= OFFSET
R/W	= RIGHT-OF-WAY
♿	= HANDI-CAPPED PARKING
	= FIRE HYDRANT
	= UTILITY POLE
18.68'	= SPOT ELEVATION

PINNELL SURVEY, INC.

PROFESSIONAL SURVEYORS AND MAPPERS
5300 WEST HILLSBORO BOULEVARD, SUITE 215-A
COCONUT CREEK, FLORIDA 33073
PHONE: (954)418-4940 FAX: (954)418-4941
LICENSED BUSINESS #6857

PROJECT ADDRESS: 310 N.E. 1ST AVENUE
DELRAY BEACH, FLORIDA 33444

CERTIFY TO:

1. JOSEPH G. WAGMAN AND SUSAN G. WAGMAN

LEGAL DESCRIPTION:

LOT 26, OF "SUBDIVISION OF BLOCK 65", ACCORDING TO THE PLAT THEREOF, AS RECORDED IN PLAT BOOK 2, AT PAGE 20, OF THE PUBLIC RECORDS OF PALM BEACH COUNTY, FLORIDA.

ENCROACHMENT NOTES:

1. 6 FOOT WOOD FENCE CROSSES OVER THE NORTHERLY, SOUTHERLY AND WESTERLY PROPERTY LINES.
2. SIDEWALK CROSSES OVER THE EASTERLY PROPERTY LINE.

GENERAL NOTES:

1) TYPE OF SURVEY: BOUNDARY
2) IF THIS SURVEY HAS BEEN REVISED AS INDICATED IN THE REVISION BOX SHOWN HEREON, THEN ANY AND ALL PREVIOUS VERSIONS OF THIS SURVEY PREPARED BY PINNELL SURVEY, INC. ARE NULL & VOID.
3) THIS SURVEY IS NOT VALID WITHOUT THE ORIGINAL SIGNATURE AND SEAL OF A FLORIDA LICENSED SURVEYOR AND MAPPER, UNLESS IT HAS BEEN ELECTRONICALLY SIGNED AND SEALED.
4) THE PROPERTY SHOWN HEREON WAS NOT ABSTRACTED FOR OWNERSHIP, RIGHTS-OF-WAY, EASEMENTS OR OTHER MATTERS OF RECORD BY PINNELL SURVEY, INC. THERE MAY BE ADDITIONAL RESTRICTIONS THAT ARE NOT DEPICTED ON THIS SURVEY THAT MAY BE FOUND IN THE PUBLIC RECORDS OF THE COUNTY, FOR WHICH THE SUBJECT PROPERTY IS LOCATED IN.
5) THE PROPERTY SHOWN HEREON WAS SURVEYED BASED ON OLD REPUBLIC NATIONAL TITLE INSURANCE COMPANY POLICY NO. OF6-9023285, DATED MAY 5, 2022 AT 1:11 PM AND ALL PLOTTABLE MATTERS OF SURVEY CONTAINED IN SCHEDULE B OF SAID COMMITMENT WHICH AFFECT THE SUBJECT PROPERTY ARE SHOWN HEREON.
6) ELEVATIONS SHOWN HEREON (IF ANY) ARE BASED ON THE NAVD '88, UNLESS OTHERWISE NOTED.
7) UNDERGROUND IMPROVEMENTS AND UTILITIES ARE NOT LOCATED.
8) FENCE AND WALL OWNERSHIP IS NOT DETERMINED.
9) THIS DRAWING IS THE PROPERTY OF PINNELL SURVEY, INC. AND SHALL NOT BE USED OR REPRODUCED, WHOLE OR IN PART WITHOUT WRITTEN PERMISSION & AUTHORIZATION FROM PINNELL SURVEY, INC.
10) ALL EASEMENTS SHOWN ON THE ATTACHED DRAWING ARE PER THE RECORD PLAT (UNLESS OTHERWISE NOTED).
11) PALM BEACH COUNTY BENCHMARK "Z 233" ELEVATION=16.020' NAVD 1988.
12) BY GRAPHIC PLOTTING ONLY, THE PROPERTY SHOWN HEREON IS LOCATED WITHIN A FLOOD ZONE "X" WITH AN UNDETERMINED BASE FLOOD ELEVATION, AS SHOWN ON F.I.R.M. MAP 125102-0979-F BEARING A MAP EFFECTIVE DATE OF 10/05/17.
13) DATE FIELDWORK PERFORMED: 08/18/22 (FIELD BOOK 650, PAGE 33)
14) DRAWN BY: Q.D.I. CHECKED BY: K.M.

CERTIFICATION:

THIS IS TO CERTIFY THAT I HAVE RECENTLY SURVEYED THE PROPERTY DESCRIBED IN THE FOREGOING TITLE CAPTION AND HAVE SET OR FOUND MONUMENTS AS INDICATED ON THIS SKETCH AND THAT SAID ABOVE GROUND SURVEY AND SKETCH ARE ACCURATE AND CORRECT TO THE BEST OF MY KNOWLEDGE AND BELIEF. I FURTHER CERTIFY THAT THIS SURVEY MEETS THE STANDARDS OF PRACTICE UNDER RULE 5J-17, FLORIDA ADMINISTRATIVE CODE, ADOPTED BY THE FLORIDA STATE BOARD OF PROFESSIONAL SURVEYORS AND MAPPERS.

JASON H. PINNELL
PROFESSIONAL SURVEYOR & MAPPER
LICENSE NO. 5734 - STATE OF FLORIDA

THE SEAL APPEARING ON THIS DOCUMENT WAS APPROVED BY JASON H. PINNELL, P.S.M. #5734

REVISIONS:

REVISION	DATE	CHECKED BY

PROJECT NAME: WAGMAN JOB NO.: 22-1681

Survey prepared by Pinnell Survey, Inc. Copyright © Jason H. Pinnell & Pinnell Survey, Inc.