LUMINIS

SR115/SR215 SERIES
SCIROCCO

TYPE: _______ QUANTITY: _______ PROJECT: ____________

CATALOG NUMBER:	FIXTURE	WATTAGE	VOLTAGE	FINISH	OPTION	OPTION	OPTION	OPTION

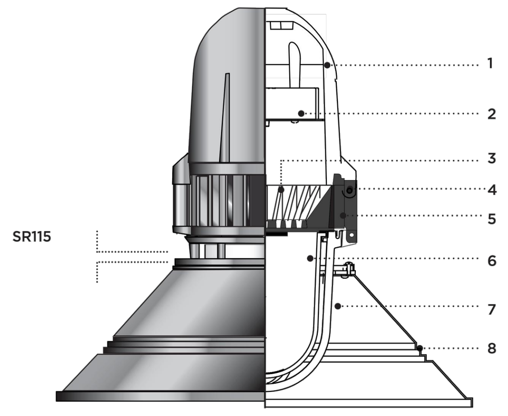

SR215: Full cutoff luminaire

1- Cast aluminum driver housing.
2- Universal driver tray with twist lock design.
3- Sealed and isolated LED compartment.
4- Housing/shade assembly hinge mechanism.
5- Cast aluminum LED heat dissipator.
6- Borosilicate prismatic heavy glass diffuser.
7- Cast aluminum ribbed cage.
8- Structurally reinforced perimeter aluminum shade. Inner surface is standard white enamel for increased light performance.

SR115T

SR215T

MATERIALS
Scirocco is made of corrosion resistant 356 aluminum alloy with a copper (CU) content of less than 0.1%.
The top cast aluminum housing is designed with a hinged mechanism.
The hard aluminum shade assembly is designed with a set of perimeter reinforcement ribs. The inner surface is standard white enamel for higher light efficiency.
The lower optical assembly includes sealed borosilicate prismatic glass diffuser, which is secured with a silicone memory retention gasket.

ELECTRICAL
DRIVER Standard driver is 0-10V dimming-ready (dims to 10%) with: 120-277 multi-volt compatibility (50-60Hz), operating temperature range of -30ºC/-22ºF to 60ºC/140ºF, output over voltage protection, output over current protection and output short circuit protection with auto-recovery.

LED Standard 4000K LED platform included. Optional 3000K and 3500K available. Removable modular LED platform.

LIFE
51,000hrs $L_{77}B_{50}$ (based on IESNA TM-21 Test Method and LM80 data).
68,000hrs $L_{70}B_{50}$ (calculated projection from LM80 data).

FINISH
Five-stage preparation process including preheating of cast aluminum parts for air pocket extraction, and an environmentally friendly alloy sealant. Polyester powder coating is applied through an electrostatic process and oven cured for long term finish.

MOUNTING
Maximum weight: 14.66 lbs (6.7 kg)
Scirocco is designed as a modular luminaire concept offering a selection of mounting arrangements for various architectural requirements.
Pole, wall or suspended attachments are proposed with high quality components to meet multiple installation conditions.
Pendant version only: Fixture must be installed on a finished ceiling for exterior applications and/or when exposed to inclement weather.

CERTIFICATION
Certified and Approved as per CSA C22.2 No.: 250.0 standard and ANSI/UL 1598 standard, for wet location. Rated IP65.
Photometry tested per IES LM-79-08 / IES LM80 test report at 25º C.

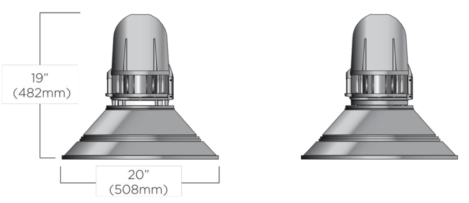

EPA: 0.75

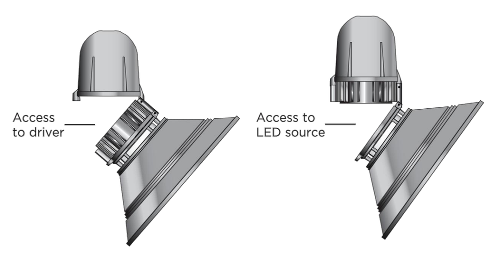

Scirocco is designed for ease of access with a double hinge sealed mechanism isolating the light chamber from the driver compartment minimizing maintenance handling and possibly damaging components.

July 2022 Rev. 4

SR115/SR215 SERIES
SCIROCCO

TYPICAL PHOTOMETRY SUMMARY

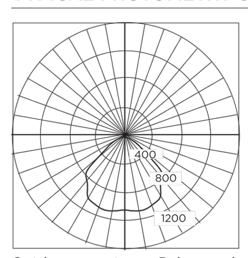

Outdoor report Polar graph
Maximum Candela = 1101

Descriptive Information
Total Lms: 2656 Lumens
Total Input Watts: 53 W
Source: LED
Total efficiency: 50%
BUG Rating: B1-U0-G0
CCT: 4000K

SR115-L1W56
SR215-L1W56

Please visit our web site www.luminis.com for complete I.E.S. formatted download data.

LUMINAIRE SELECTION

MODEL#

☐ SR115
☐ SR215

LED LIGHT SELECTION

SUFFIX	DELIVERED LUMENS	INPUT WATTS	CRI	CCT ºK
☐ L1W30	1350	26W	80	4000K
☐ L1W56	2656	53W		

VOLTAGE [1]
☐ 120V
☐ 277V
Optional
☐ 347V
☐ 480V

FINISH
STANDARD COLORS
☐ WHT Snow white
☐ BKT Jet black
☐ BZT Bronze
☐ MST Matte silver
☐ GRT Titanium gray
☐ DGT Gun metal
☐ CHT Champagne
☐ SGT Steel gray
☐ BGT English cream

OPTIONAL COLORS
☐ CS Custom color
☐ RAL RAL# color

(Refer to color chart)

OPTIONS

ELECTRICAL
☐ **FS** Fuse [2]
☐ **PH** Photocell [2]
☐ **347L** 347V input power driver

Alternate CCT ºK LED
☐ **K3** 3000K CCT LED
☐ **K35** 3500K CCT LED

ACCESSORIES
☐ **SC** Safety cable extends 18" over mounting plate (with stem mounting only)
☐ **SSC** Stabilizer cables
☐ **HS** House shield installed within the glass diffuser

CONTROL
☐ **NLTAIR2** nLight AIR Control gen2 embedded in canopy, with black antenna. [3, 4, 5, 6]

MOUNTING
☐ **ACA** Pole mount attachment with 45º support
☐ **2ACA** Double pole mount attachment with 45º support at 180º
☐ **ACW** Wall mount attachment with 45º support
☐ **APA** Pole mount shepherd arm attachment
☐ **2APA** Double pole mount shepherd arm attachment at 180º
☐ **APC** Pole mount straight arm attachment
☐ **2APC** Double pole mount straight arm attachment at 180º
☐ **APS** Post top shepherd arm attachment
☐ **CAT3** Catenary suspension attachment with 12º adjustment mechanism
☐ **W** Wall mount shepherd arm attachment
☐ **T** Wall mount straight arm attachment
☐ **STM** 36" Field-cuttable stem with 45º swivel (other lengths available, please specify)
☐ **SPG** Silver braided power cord with adjustable suspension cable. 36" length (other lengths on request)

NOTES
1- Luminaires are factory prewired for 120V (if no voltage is specified.) For other voltages, please specify with catalog number, or consult factory.
2- Fuse and photocell options are normally installed with poles when specified with Luminis luminaires. (Except for other types of mounting.)
3- 120/277V only.
4- Installed in Ø 11" or Ø 15" canopy with STM. Refer to the mounting images for more details.
5- Not compatible with PH, Wall mounts, Pole mounts, Post tops, CAT3.
6- White antenna available upon request.

July 2022 Rev. 4

LUMINIS

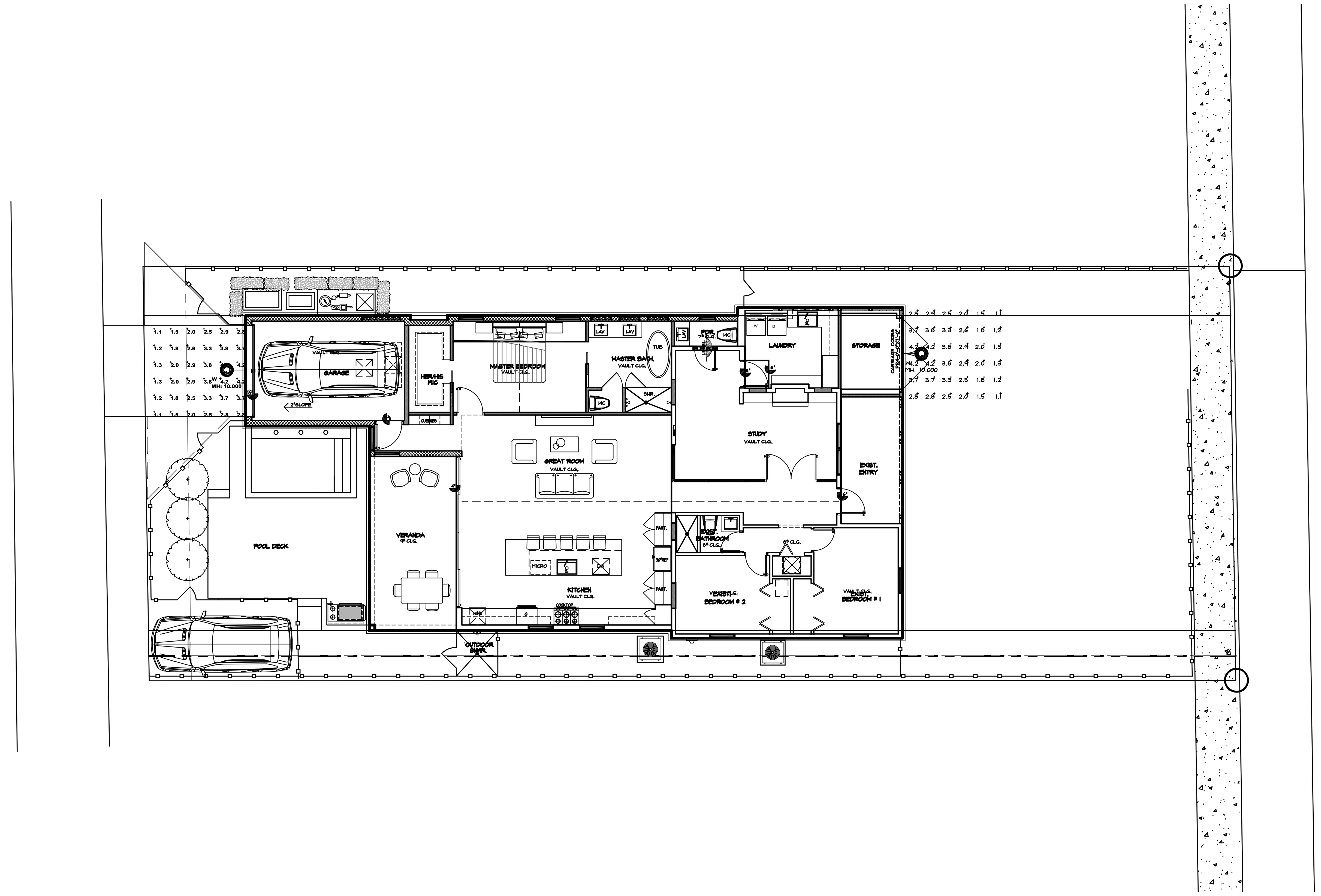

Luminaire Schedule: 310 NE 1ST AVE - SITE DELRAY BEACH, FL 09/20/2022										
Symbol	Qty	Label	Arrangement	Manufacturer	Catalog Number	Mounting	LLF	Luminaire Lumens	Luminaire Watts	Arrangement Watts
	1	W	Single	Luminis Canada Inc.	SR115-L1W30-xxx-xxx-ACW	10' WALL MOUNT A.F.F. (bottom of fixture)	0.903	1350	26	26

Calculation Summary: 310 NE 1ST AVE - SITE DELRAY BEACH, FL 09/20/2022							
Label	Calc Type	Units	Avg	Max	Min	Avg/Min	Max/Min
GARAGE ENTRY	Illuminance	Fc	2.64	4.2	1.1	2.40	3.82

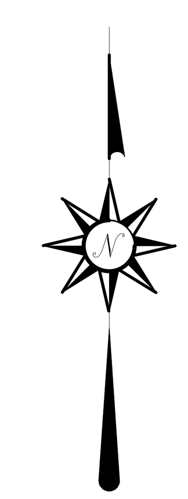

COPYRIGHT © 2012 AMES INTERNATIONAL ARCHITECTURE OWNERSHIP OF PLANS AND SPECIFICATIONS : PLANS, DESIGNS, DRAWINGS AND SPECIFICATIONS ARE THE INSTRUMENTS OF SERVICE AND ARE OWNED BY AMES INTERNATIONAL ARCHITECTURE AND THEY REMAIN THE SOLE AND EXCLUSIVE PROPERTY OF AMES INTERNATIONAL ARCHITECTURE AND MAY BE USED BY AMES INTERNATIONAL ARCHITECTURE FOR ANY PURPOSE WHATSOEVER. THE PLANS, DESIGNS, DRAWINGS AND SPECIFICATIONS ARE LOANED TO THE CLIENT FOR THE PURPOSE OF BUILDING THIS PROJECT ONLY. THE PLANS, DESIGNS, DRAWINGS AND SPECIFICATIONS SHALL NOT BE DUPLICATED BY THE CLIENT AND/OR HIS AGENTS IN WHOLE OR IN PART IN ANY MANNER. THESE DOCUMENTS SHALL NOT BE SUBMITTED BY THE CLIENT AND/OR HIS AGENTS TO ANY THIRD PARTY FOR EXAMINATION AND/OR FOR THE PURPOSE AND INTENT OF COPYING AND/OR BUILDING THIS PARTICULAR PROJECT WITHOUT THE EXPRESS WRITTEN CONSENT OF AMES INTERNATIONAL ARCHITECTURE. THESE DOCUMENTS SHALL ONLY BE USED BY THE CLIENT AND/OR HIS AGENTS FOR THE BUILDING OF THIS PROJECT. COPYRIGHT INFRINGEMENTS : AMES INTERNATIONAL ARCHITECTURE WILL PROSECUTE ALL COPYRIGHT INFRINGEMENTS INVOLVING AMES INTERNATIONAL ARCHITECTURE'S PLANS, DESIGNS, DRAWINGS AND SPECIFICATIONS.

POHOTOMETRIC PLAN

(HISTORIC PRESERVATION) PRELIMINARY DRAWINGS

JOE & SUSAN WAGMAN
310 NE 1ST AVE
DELRAY BEACH
FLORIDA, 33444.

REVISIONS

Shane Ames - Architect

Ames INTERNATIONAL ARCHITECTURE

DRAWN	A.G.
CHECKED	
DATE	8/12/2022
SCALE	1:10
JOB NO.	22_5176
SHEET	A02.2
OF XX SHEETS	

Lic# : AA0002307 ARCH.R.# : AR0012001 ADDRESS : HISTORIC DEL-IDA PARK, PROFESSIONAL DISTRICT, 203 DIXIE BOULEVARD, DELRAY BEACH, FLORIDA, 33444. PHONE : (561)274 6444, FAX : (561)2746449.