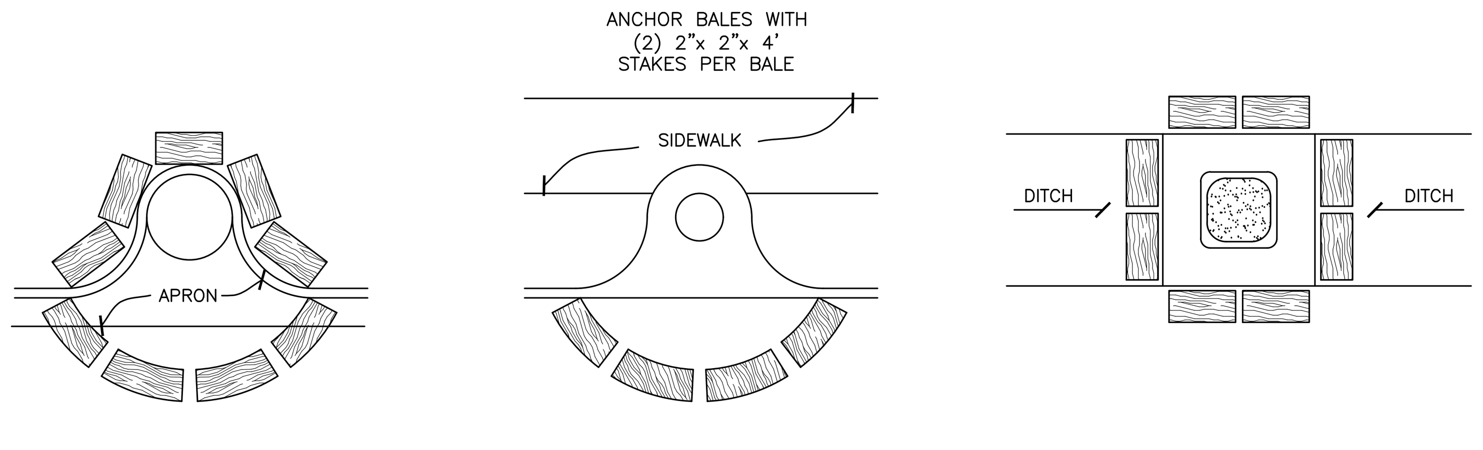

PARTIAL INLET

COMPLETED INLET

DITCH BOTTOM INLET

PROTECTION AROUND INLETS OR SIMILAR STRUCTURES
N.T.S.

FIGURE 6

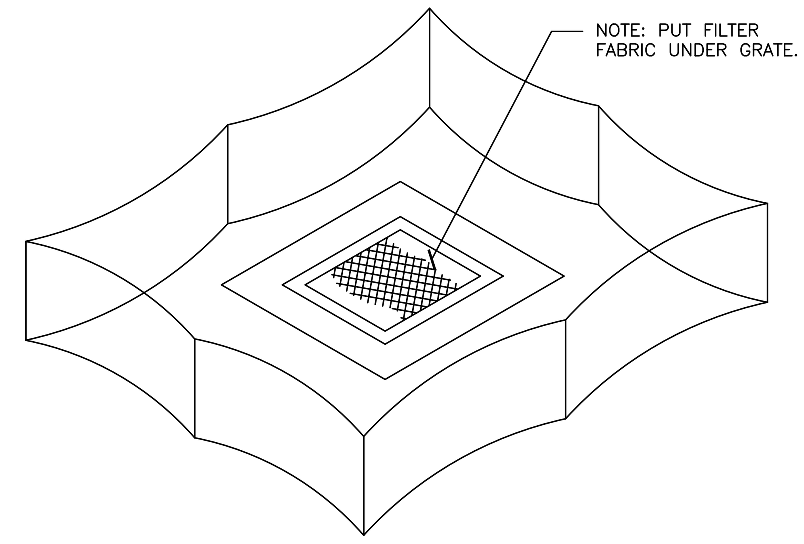

STAKED SILK BARRIER OR SILT FENCE PROTECTION AROUND DITCH BOTTOM INLETS
N.T.S.

FIGURE 7

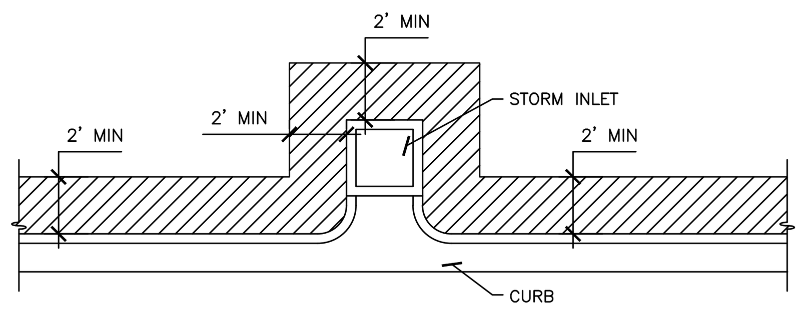

SOD ALONG CURB AND AROUND INLET
N.T.S.

FIGURE 9

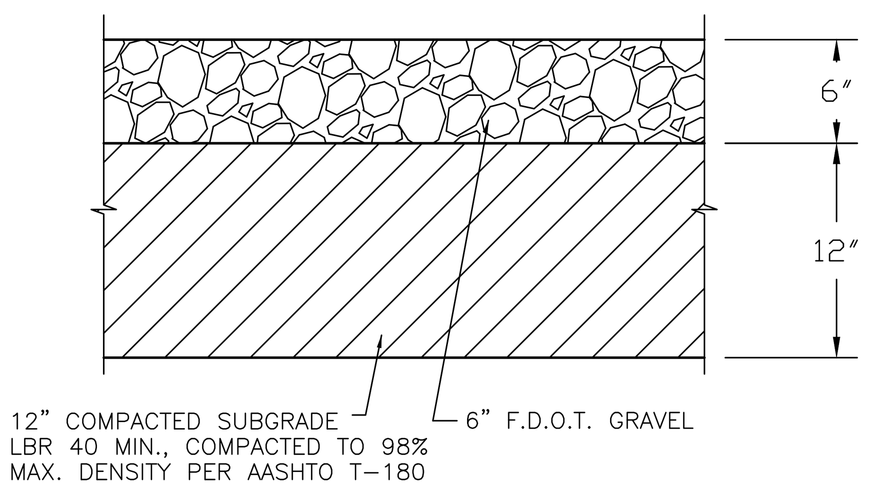

CONSTRUCTION ENTRANCE SECTION

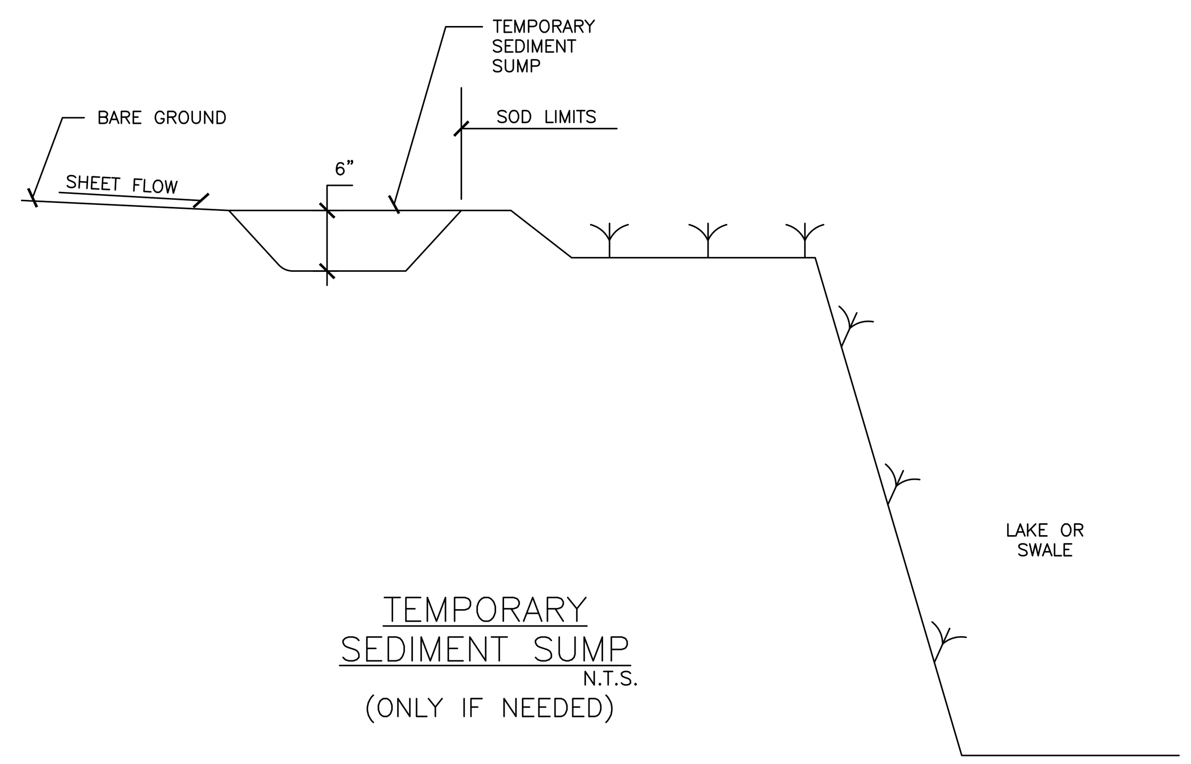

TEMPORARY SEDIMENT SUMP
N.T.S.
(ONLY IF NEEDED)

FIGURE 10

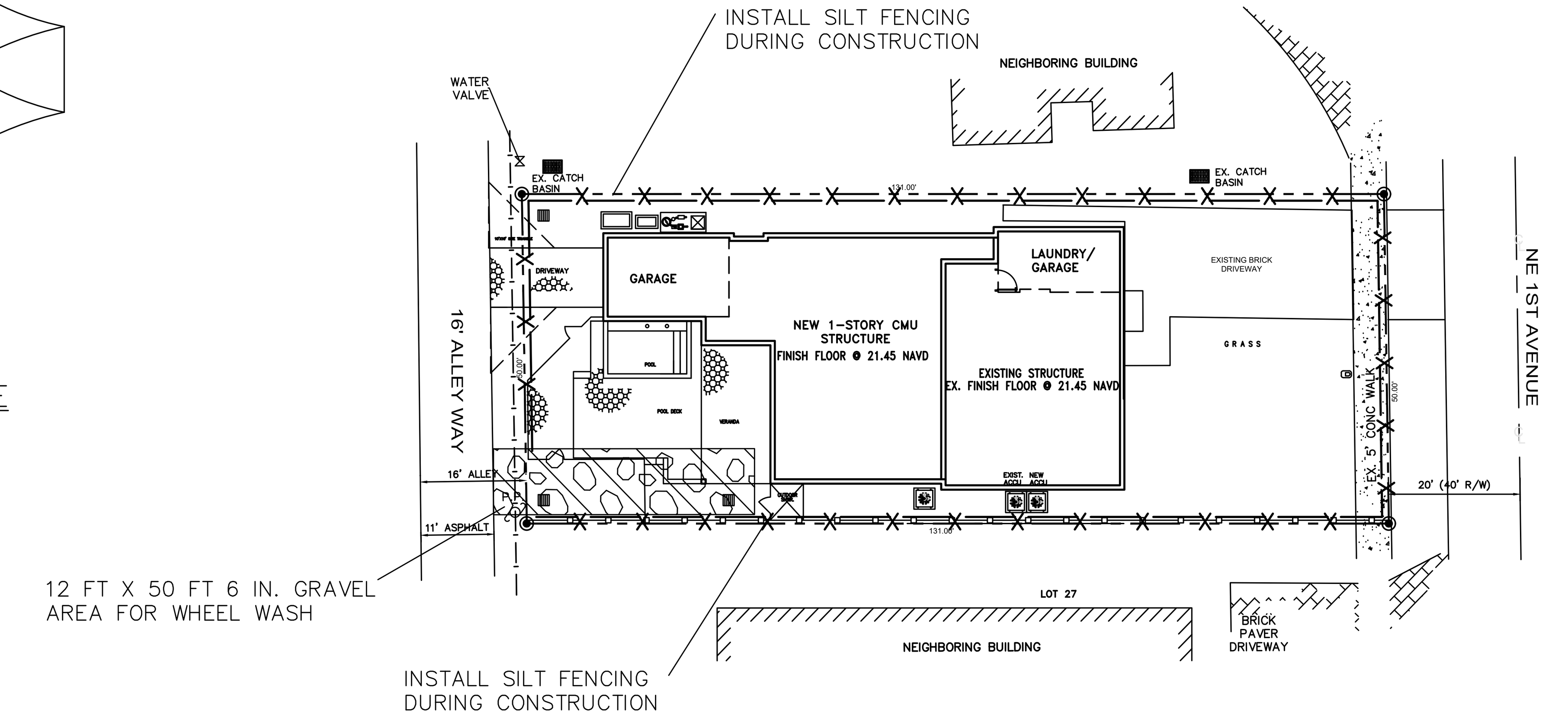

BEST MANAGEMENT PRACTICES PLAN
SCALE 1"=20'-0"

BEST MANAGEMENT PRACTICES

SECTION A GENERAL EROSION CONTROL

A.1 General erosion control BMP's shall be employed to minimize soil erosion and potential lake slope cave-ins. While the various techniques required will be site and plan specific, they should be employed as soon as possible during construction activities.

A.2 Cleared site development areas not continually scheduled for construction activities shall be covered with hay or overseeded and periodically watered sufficient to stabilize the temporary groundcover.

A.3 Slopes of banks retention/detention ponds shall be constructed not steeper than 4H:1V from top of bank to two feet below normal water level as shown in Figure 5.

A.4 All grass slopes constructed steeper than 4H:1V shall be sodded as soon as practical after their construction as shown in Figure 8.

A.5 Sod shall be placed for a 3-foot wide srtip adjoining all curbing and around all inlets as shown in Figure 9. Sod shall be placed before silt barriers, shown in Figure 6, are removed.

A.6 Where required to prevent erosion from sheet flow across bare ground from entering a lake or swale, a temporary sediment sump shall be constructed as shown in Figure 10. The temporary sediment sump shall remain in place until vegetation is established on the ground draining to the sump.

SECTION B PROTECTION OF SURFACE WATER QUALITY DURING AND AFTER CONSTRUCTION

B.1 Surface water quality shall be maintained by employing the following BMP's in the construction planning and construction of all improvements.

B.2 Where practical, stormwater shall be conveyed by swales. Swales shall be constructed as shown in Figure 5.

B.3 Erosion control measures shall be employed to minimize turbidity of surface waters located downstream of any construction activity. While the various measures required will be site specific, they shall be employed as needed in accordance with the following.

a. In general erosion shall be controlled at the furthest practical upstream location.

b. Stormwater inlets shall be protected during construction as shown in Figures 6 and 7. Protection measures shall be employed as soon as practical during the various stages of inlet construction. Silt barriers shall remain in place until sodding around inlets is complete.

B.4 Heavy construction equipment parking and maintenance areas shall be designed to prevent oil, grease and lubricants from entering site drainage feeatures in cluding stormwater collection and treatment systems. Contractors shall provide broad dikes, hay bales or silt screens around, and sediment sumps within, such areas as required to contain spills of oil, grease or lubricants. Contractors shall have available, and shall use absorbent filter pods to clean up spills as soon as poissible after occurence.

B.5 Silt barriers, any silt which accumulates behind the barriers, and any fill used to anchor the barriers shall be removed promptly after the end of the maintenance period specified for the barriers.

SECTION C CONTROL OF WIND EROSION

C.1 Wind erosion shall be controlled by employing the following methods as necessary and appropriate:

a. Bare earth areas shall be watered during construction as necessary to minimize the transport of fugitive dust. It may be necessary to limit construction vehicle speed if bare earth has not been effectively watered. In no case shall fugitive dust be allowed to leave the site under construction.

b. As soon as practical after completion of construction, bare earth areas shall be vegetated.

c. At any time both during and after site construction that watering and/or vegetation are not effective in controlling wind erosion and/or transport of fugitive dust, other methods as are necessary for such control shall be employed. These methods may include erection of dust control fences. If required, dust control fences shall be constructed in accordance with the detail for a silt fence shown in Figure 2, except the minimum height shall be 4 feet.

1. THE INTENT OF EROSION CONTROL MEASURES INDICATED GRAPHICALLY ON PLANS IS TO PROVIDE A BARRIER TO CONTAIN SILT AND SEDIMENT ON THE PROJECT SITE. THIS REPRESENTATION IS PROVIDED FOR THE CONVENIENCE OF THE CONTRACTOR. THE TEST OF EROSION CONTROL EFFECTIVENESS IS NOT TO BE DETERMINED BY ADHERENCE TO THE REPRESENT SET FORTH ON THE DRAWINGS AND SPECIFICATIONS, BUT BY MEETING THE REGULATIONS SET FORTH BY THE AUTHORITY HAVING JURSDICTION OVER WATER QUALITY CONTROL AND OTHER SEDIMENTATION RESTRICTION REQUIREMENTS IN THE REGION.
2. APPROVED EROSION AND SEDIMENT CONTROL MEASURES SHALL BE INSTALLED PRIOR TO ANY CLEARING GRADING, EXCAVATION, FILLING, OR OTHER LAND DISTURBANCE ACTIVITIES, EXCEPT THOSE OPERATIONS NEEDED TO INSTALL SUCH MEASURES.
3. INSPECTION OF ALL EROSION CONTROL MEASURES SHALL BE CONDUCTED WEEKLY, OR AFTER EACH RAINFALL EVENT. REPAIR, AND/OR REPLACEMENT OF SUCH MEASURES SHALL BE MADE PROMPTY, AS NEEDED.
4. KEEP DUST WITHIN TOLERABLE LIMITS BY SPRINKLING OR OTHER ACCEPTABLE MEANS.
5. ADDITIONAL EROSION AND SEDIMENT CONTROL MEASURES MAY BE REQUIRED IF DEEMED NECESSARY BY ONSITE INSPECTION.
6. FAILURE TO PROPERLY INSTALL AND MAINTAIN EROSION CONTROL PRACTICES SHALL RESULT IN CONSTRUCTION BEING HALTED.
7. DRAINAGE INLETS SHALL BE PROTECTED BY FILTER AND GRADED ROCK AS PER INLET PROTECTION DETAIL.
8. ANY ACCESS ROUTES TO SITE SHALL BE BASED WITH CRUSHED STONE, WHERE PRACTICAL.
9. EROSION CONTROL MEASURES ARE TO BE MAINTAINED UNTIL PERMANENT GROUND COVER IS ESTABLISHED.
10. WHENEVER FEASIBLE, NATURAL VEGETATION SHALL BE RETAINED AND PROTECTED.
11. ALL WORK IS TO BE IN COMPLIANCE WITH THE RULES AND REGULATIONS SET FORTH BY THE STATE OF FLORIDA, DEPARTMENT OF ENVIRONMENTAL PROTECTION AND THE CITY OF DELRAY BEACH.
12. DISCHARGE FROM DEWATERING OPERATIONS SHALL BE RETAINED ONSITE IN A CONTAINMENT AREA.

EROSION CONTROL NOTES DETAIL D9.1

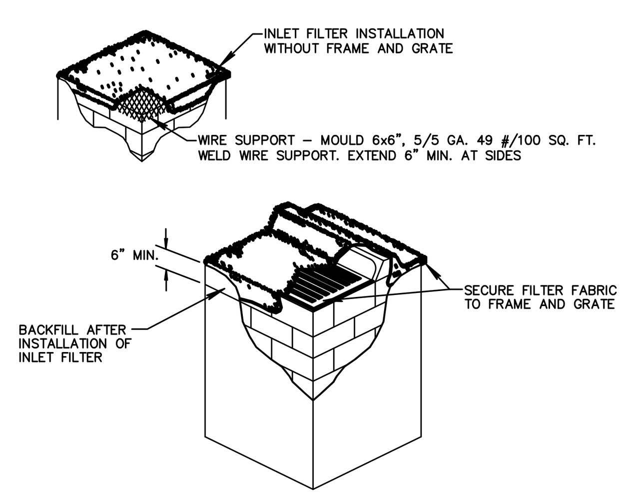

NOT TO SCALE

NOTES:

1. CONTRACTOR IS TO CLEAN INLET FILTER AFTER EVERY STORM.
2. CONTRACTOR TO REMOVE FABRIC JUST PRIOR TO PAVING.

A SEDIMENT TRAP WILL BE EXCAVATED BEHIND THE CURB AT THE INLET. THE BASIN SHALL BE AT LEAST 12 TO 14 INCHES IN DEPTH, APPROXIMATELY 36 INCHES IN WIDTH, AND APPROXIMATELY 7 TO 10 FEET IN LENGTH PARALLEL TO THE CURB.

STORM WATER WILL REACH THE SEDIMENT TRAP VIA CURB CUTS ADJACENT TO EACH SIDE OF THE INLET STRUCTURE. THESE OPENINGS SHALL BE AT LEAST 12 INCHES IN LENGTH. STORM WATER MAY ALSO REACH THE BASIN VIA OVERLAND FLOW LAND AREA BEHIND THE CURB. THE CURB CUTS SHALL BE REPAIRED WHEN THE SEDIMENT TRAP IS REMOVED.

INLET FILTER DETAIL D 8.1

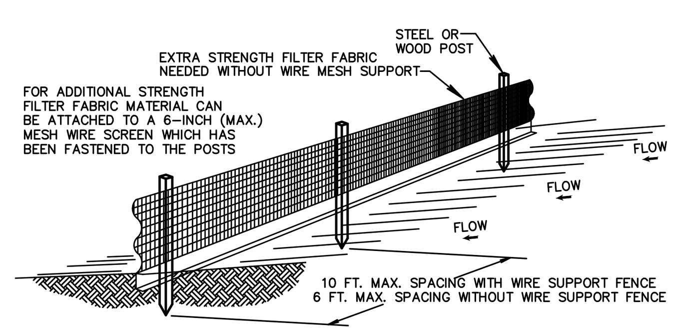

NOTES:

1. THE HEIGHT OF A SILT FENCE SHALL NOT EXCEED 36 INCHES (90 CM).
2. THE FILTER FABRIC SHALL BE PURCHASED IN A CONTINUOUS ROLL CUT TO THE LENGTH OF THE BARRIER TO AVOID THE USE OF JOINTS.
3. POSTS SHALL BE SPACED A MAXIMUM OF 10 FEET (3 M) APART AT THE BARRIER LOCATION AND DRIVEN SECURELY INTO THE GROUND A MINIMUM OF 12 INCHES (30 CM). WHEN EXTRA STRENGTH FABRIC IS USED WITHOUT THE WIRE SUPPORT FENCE, POST SPACING SHALL NOT EXCEED 6 FEET (1.8 M).
4. A TRENCH SHALL BE EXCAVATED APPROXIMATELY 4 INCHES (10 CM) WIDE AND 4 INCHES (10 CM) DEEP ALONG THE LINE OF POSTS AND UPSLOPE FROM THE BARRIER.
5. WHEN STANDARD STRENGTH FILTER FABRIC IS USED, A WIRE MESH SUPPORT FENCE SHALL BE FASTENED SECURELY TO THE UPSLOPE SIDE OF THE POSTS USING HEAVY DUTY WIRE STAPLES AT LEAST 1 INCH (25 MM) LONG, TIE WIRES, OR HOG RINGS. THE WIRE SHALL EXTEND INTO THE TRENCH A MINIMUM OF 2 INCHES (5 CM) AND SHALL NOT EXTEND MORE THAN 36 INCHES (90 CM) ABOVE THE ORIGINAL GROUND SURFACE.
6. THE STANDARD STRENGTH FILTER FABRIC SHALL BE STAPLED OR WIRED TO THE FENCE, AND 8 INCHES (20 CM) OF THE FABRIC SHALL BE EXTENDED INTO THE TRENCH. THE FABRIC SHALL NOT EXTEND MORE THAN 36 INCHES (90 CM) ABOVE THE ORIGIONAL GROUND SURFACE.
7. THE TRENCH SHALL BE BACKFILLED AND THE SOIL COMPACTED OVER THE FILTER FABRIC.

SILT FENCE INSTALLATION DETAIL D 9.1a

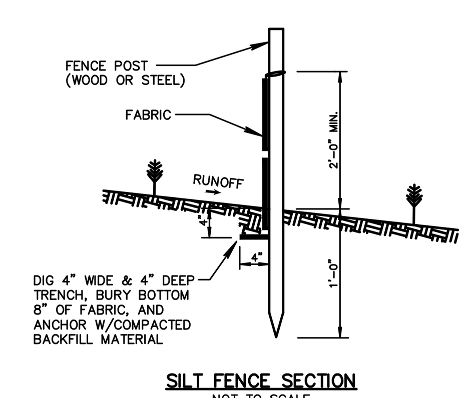

SILT FENCE SECTION
NOT TO SCALE

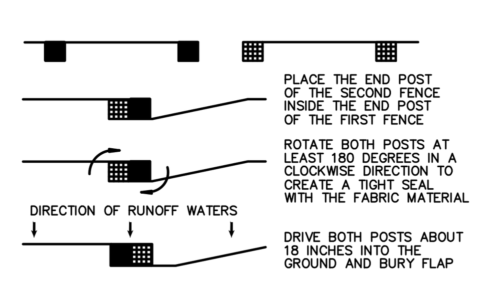

ATTACHING TWO SILT FENCES
NOT TO SCALE

SILT FENCE INSTALLATION DETAIL D 9.1b

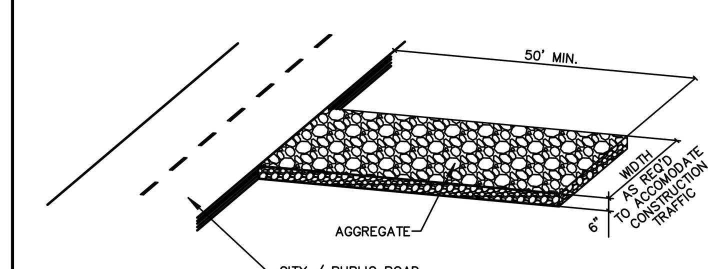

NOTE:
A CONSTRUCTION ENTRANCE SHALL BE CONSTRUCTED AND CONTAIN AN AGGREGATE LAYER (FDOT AGGREGATE NO.1), AT LEAST 6-INCHES THINK. IT MUST EXTEND TO THE WIDTH OF THE VEHICULAR INGRESS AND EGRESS AREA.

STABILIZED CONSTRUCTION ENTRANCE DETAIL D9.1C

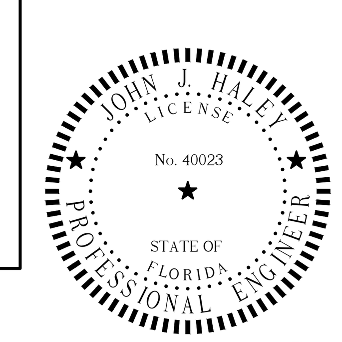

This item has been digitally signed and sealed by John J. Haley, P.E. on date adjacent to seal

Printed copies of this document are not considered signed and sealed and the signature must be verified on any electronic copies.

Designed	J.J.H.
Drawn	E.L.H.
Checked	J.J.H.

NO.	DATE	REVISION	BY

HALEY ENGINEERING, INC.
CIVIL ENGINEERING SERVICES.
1680 SE 4th Street – Deerfield Beach, Fla. 33441
Phone: (954) 260-6194
Email: johnjhaley@comcast.net
F.B.P.E. Authorization No. 9463

310 NE 1ST AVENUE
DELRAY BEACH, FLORIDA

BEST MANAGEMENT PRACTICES DETAILS

APPROVED:
JOHN J. HALEY, P.E.
REGISTERED ENGINEER NO. 40023
STATE OF FLORIDA

John J. Haley
Digitally signed by John J. Haley
Date: 2022.09.30 15:19:44 -04'00'

SCALE: N.T.S.

PROJECT NUMBER: 22-2964