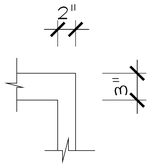

TYP. WIND. CASING DETAIL

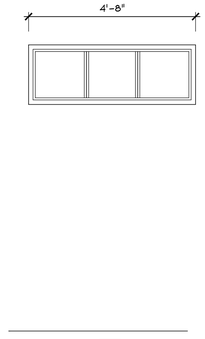

07 NEW FIXED WINDOW

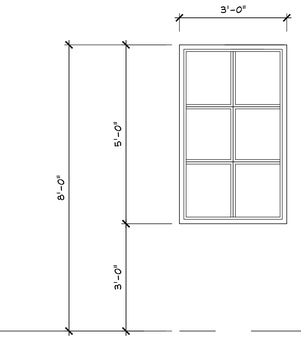

06 05 03 02 NEW FIXED WINDOW

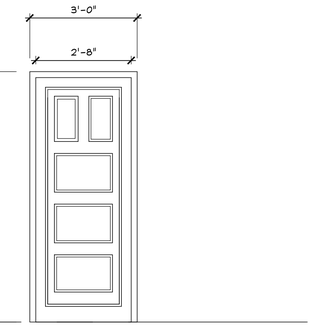

101 NEW RAISED PANEL FRONT DOOR (CLIENT SELECT)

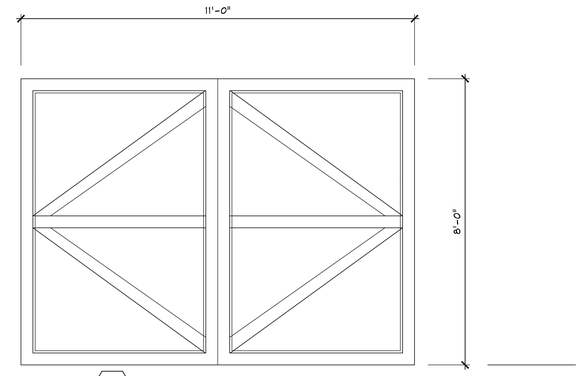

116 NEW WOOD CARRIAGE DOOR

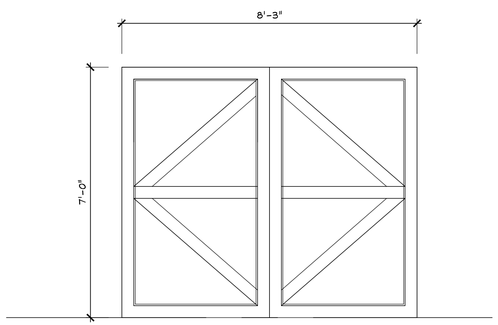

115 NEW WOOD CARRIAGE DOOR

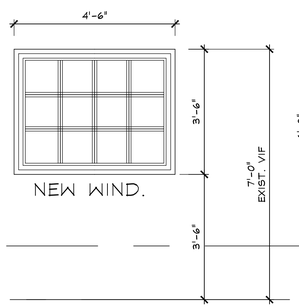

114 NEW FIXED WINDOW

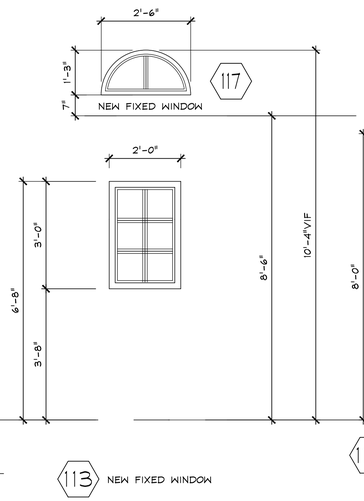

113 NEW FIXED WINDOW

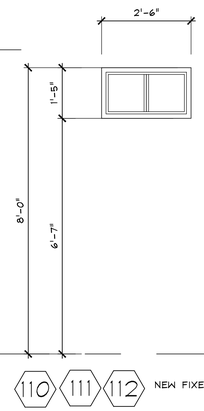

110 111 112 NEW FIXED WINDOW

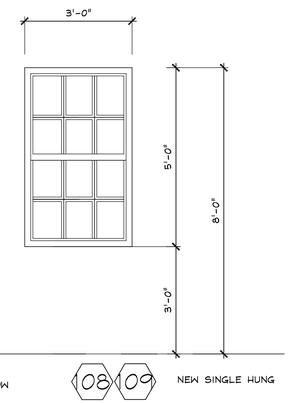

08 09 NEW SINGLE HUNG

3. PROVIDE ST. STL OR BRASS HARDWARE FOR ALL DOOR & WINDOWS. (V.I.F.)
4. BUILDER TO V.I.F. W/ OWNER ALL PRODUCT & MATERIAL SELECTIONS
5. GC TO FIELD VERIFY ALL SIZES PRIOR TO FABRICATION OF THE WINDOWS
6. ALUMINUM FRAME FOR WINDOWS -STYLE & COLOR CLIENT SELECT
7. CLEAR GLASS FOR ALL WINDOWS AND DOORS PROPOSED.
8. IMPACT GLASS FOR ALL NEW WINDOWS AND DOORS

COPYRIGHT © 2022 AMES INTERNATIONAL ARCHITECTURE OWNERSHIP OF PLANS AND SPECIFICATIONS, & ARS DRAWING DRAWING AND SPECIFICATIONS ARE THE INSTRUMENTS OF SERVICE AND ARE OWNED BY AMES INTERNATIONAL ARCHITECTURE AND THE REPRODUCTION OF SUCH AND EXCLUSIVE PROPERTY OF AMES INTERNATIONAL ARCHITECTURE. THESE DOCUMENTS SHALL NOT BE DUPLICATED BY THE CLIENT AND/OR HIS AGENTS OR ANY THIRD PARTY FOR EXAMPLE OR PURPOSE OTHER THAN THE PURPOSE AND INTENT OF OBTAINING AND/OR BUILDING THIS PARTICULAR PROJECT WITHOUT THE EXPRESS WRITTEN CONSENT OF AMES INTERNATIONAL ARCHITECTURE. THESE DOCUMENTS SHALL ONLY BE USED BY THE CLIENT AND/OR HIS AGENTS OR ANY THIRD PARTY FOR EXAMPLE OR PURPOSE OTHER THAN THE PURPOSE AND INTENT OF OBTAINING AND/OR BUILDING THIS PARTICULAR PROJECT WITHOUT THE EXPRESS WRITTEN CONSENT OF AMES INTERNATIONAL ARCHITECTURE. THESE DOCUMENTS SHALL ONLY BE USED BY THE CLIENT AND/OR HIS AGENTS OR ANY THIRD PARTY FOR EXAMPLE OR PURPOSE OTHER THAN THE PURPOSE AND INTENT OF OBTAINING AND/OR BUILDING THIS PARTICULAR PROJECT WITHOUT THE EXPRESS WRITTEN CONSENT OF AMES INTERNATIONAL ARCHITECTURE. THESE DOCUMENTS SHALL ONLY BE USED BY THE CLIENT

(HISTORIC PRESERVATION) PRELIMINARY DRAWINGS

JOE & SUSAN WAGMAN

310 NE 1ST AVE
DELRAY BEACH
FLORIDA, 33444.

REVISIONS

Shane Ames - Architect

Ames
INTERNATIONAL ARCHITECTURE

DOOR + WINDOW SCHEDULE

DRAWN: A.G.
CHECKED:
DATE: 8/12/2022
SCALE: 1/4" = 1'-0"
JOB NO.: 22_5176
SHEET: A09
OF XX SHEETS

ADDRESS • HISTORIC DEL-IDA PARK, PROFESSIONAL DISTRICT, 203 DIXIE BOULEVARD, DELRAY BEACH, FLORIDA, 33444. PHONE : (561)274 6444, FAX : (561)274-6446.

Lic# • AA0002307 ARCH.Rs • AR0012001