Planning, Zoning and Building Department

BOARD ACTION REPORT – APPEALABLE ITEM

Project Name: **McDonalds**
Project Location: **1220 Linton Blvd**
Request: **Class II Site Plan Modification**
Board: **Site Plan Review and Appearance Board**
Meeting Date: **April 26, 2017**

Board Action:
Approved (4-0, Roger Cope and Laura Sullivan absent) a Class II site plan modification for **McDonalds Restaurant located at 1220 Linton Blvd.**, including landscape plans with the condition that the tree being removed to accommodate the ramp be replaced and architectural elevation changes.

Project Description:
The subject property is located on the southeast corner of Linton Blvd. and Waterford Place in front of the Delray Crossing Shopping Plaza and is zoned Planned Commercial (PC). The subject parcel consists of 1.4 acres and contains a 5,011 sq. ft. building which was constructed in 1990 as a food franchise with a drive thru window for McDonalds.

The development proposal consists of the following: Restripe of the parking spaces adjacent to the main entrance to accommodate an additional handicap space; addition of an accessible ramp; addition two new parallel spaces; addition of a service/delivery ramp; new concrete pavers and a change in sidewalk to concrete from pavers; new decorative railing on the south and west elevations; removal of existing columns on the south and west elevations; exterior color changes; new exterior window assembly and drive-thru window; and minor landscaping throughout site.

Staff Recommendation:
Approval with the recommendation that the removal of the tree to accommodate the ramp be replaced.

Board Comments:
none

Public Comments:
none

Associated Actions:
none

Next Action:
The SPRAB action is final unless appealed by the City Commission.

SITE PLAN REVIEW AND APPEARANCE BOARD
CITY OF DELRAY BEACH ---STAFF REPORT---

MEETING DATE: April 26, 2017

ITEM: **McDonald's Restaurant (2016-198)** – Approval of a Class II Site Plan Modification involving ADA improvements and minor architectural changes

RECOMMENDATION: Approve with the recommendation to replace the tree they are removing.

GENERAL DATA:

Owner..... McDonald's USA, LLC

Applicant..... CPH, Inc.

Agent..... Jason James

Address……. 1220 Linton Blvd.

Location..... South east corner of Linton Blvd. and Waterford Place in front of Delray Crossing Shop Plaza

Site Area…..... 1.4 acres

Future Land Use Map..... GC (General Commercial)

Current Zoning..... PC (Planned Commercial)

Adjacent Zoning.....North: AC (Automotive Commercial)

East: PC

South: PC

West: PC

ITEM BEFORE THE BOARD

The item before the Board is a Class II Site Plan Modification for **McDonald's Restaurant (2016-198)**, pursuant to Land Development Regulations (LDR) Section 2.4.5(G)(1)(b

BACKGROUND ANALYSIS

The subject property is located on the southeast corner of Linton Blvd. and Waterford Place in front of the Delray Crossing Shopping Plaza and is zoned Planned Commercial (PC).

The subject parcel consists of 1.4 acres and contains a 5,011 sq. ft. building which was constructed in 1990 as a food franchise with a drive thru window for McDonalds. In 2003, a Class I Site Plan Modification was approved for the installation of a vinyl awning over the existing patio/playground with new playground equipment.

PROJECT DESCRIPTION

The development proposal consists of the following:

- Restripe of the parking spaces adjacent to the main entrance to accommodate an additional handicap space;
- Addition of an accessible ramp;
- Addition two new parallel spaces;
- Addition of a service/delivery ramp;
- New concrete pavers and a change in sidewalk to concrete from pavers;
- New decorative railing on the south and west elevations;
- Removal of existing columns on the south and west elevations;
- Exterior color changes
- New exterior window assembly and drive-thru window; and,
- Minor landscaping throughout site.

SITE PLAN MODIFICATION ANALYSIS

COMPLIANCE WITH THE LAND DEVELOPMENT REGULATIONS:

Items identified in the Land Development Regulations shall specifically be addressed by the body taking final action on the site and development application/request.

LDR Chapter 4.6 Supplementary District Regulations:

Parking
Pursuant to LDR Section 4.6.9(C)(3)(e), parking shall be provided at a rate of 12 spaces per 1,000 sq. ft. of gross floor area up to 6,000 sq. ft. for restaurants. The 5,011 sq. ft. restaurant requires 60 spaces; and 54 parking spaces exist on site. The current proposal includes replacing one regular space with a handicap space at the main entrance, and adding two parallel spaces on the west side. Therefore, the existing nonconformity is being decreased by increasing the provided parking.

LANDSCAPE ANALYSIS

A landscape plan has been submitted, evaluated and recommended for approval by the City Senior Landscape Planner. The applicant is proposing to remove one tree on site that is in front of the proposed delivery ramp. The site is not required to come into compliance with the entire site. Pursuant to LDR section 4.6.16(B)(4) any modification to existing development which results in an increase of 25% in the gross floor area of the structure or structures, situated on the site, the entire site shall be upgraded to present landscape standards. The remainder of the landscaping is minor ground covering that will be concentrated around the building which includes (26) Variegated Blueberry Flax, (38) Dwarf Schefflera and (25) Burford Holly and St. Augustine Sod. While not required, staff recommends that the applicant replace the removed tree in another landscape island.

ARCHITECTURAL ELEVATION ANALYSIS

Pursuant to LDR Section 4.6.18(E), the following criteria shall be considered by the Site Plan Review and Appearance Board in the review of plans for building permits. If the following criteria are not met, the application shall be disapproved.

1. The plan or the proposed structure is in conformity with good taste, good design, and in general, contributes to the image of the City as a place of beauty, spaciousness, harmony, taste, fitness, broad vistas, and high quality.

2. The proposed structure, or project, is in its exterior design and appearance of quality such as not to cause the nature of the local environment or evolving environment to materially depreciate in appearance and value.

3. The proposed structure, or project, is in harmony with the proposed developments in the general area, with the Comprehensive Plan, and with the supplemental criteria which may be set forth for the Board from time to time.

The proposed elevation changes include an accessible handicap ramp as well as a service delivery door on the south elevation where the main entrance exists. The paver sidewalk will also be removed and replaced with a concrete sidewalk. Decorative aluminum railings per McDonald's specifications will be added on the south elevation on the handicap accessible ramp as well as on the west elevation around the playground/patio area. A minimum of 5% of the patio tables on the outdoor seating area will be handicap accessible and new proposed concrete pavers per McDonald's specifications will be installed.

A new stucco finish will be added with the cornice painted White Sand (OC-10) with a new metal coping, the building base is Storm Cloud Gray (BM 2140-40) and the building accent is Iron

Mountain #2134-30. A new exterior window assembly high impact tempered glass will be replaced on the north, south and west elevations and a new drive-thru window will be replaced on the north elevation.

The proposed architectural modifications are in good design and taste. The new ADA changes will accommodate more efficient access to the building for their patrons and will not adversely affect the surrounding area or materially depreciate the neighboring areas. Based on the above, positive findings can be made with respect to LDR Section 4.6.18(E).

ALTERNATIVE ACTIONS

A. Continue with direction.

B. Approve the Class II Site Plan Modification, architectural elevations, and landscape plan for **McDonald's (2016-198)** located at **1220 Linton Blvd**. by adopting the findings of fact and law contained in the staff report, and finding that the request is consistent with the Comprehensive Plan and meets criteria set forth in Sections 2.4.5(G)(1)(b) and 4.6.18(E).

C. Deny the Class II Site Plan Modification, architectural elevations and landscape plan for **McDonald's (2016-198)** located at **1220 Linton Blvd.,** by adopting the findings of fact and law contained in the staff report, and finding that the request is inconsistent with the Comprehensive Plan and does not meet criteria set forth in Sections 2.4.5(G)(1)(b) and 4.6.18(E).

RECOMMENDATION

By Separate Motions:

Site Plan Modification:
Approve the Class II Site Plan Modification for **McDonald's (2016-198)** located at **1220 Linton Blvd,** by adopting the findings of fact and law contained in the staff report, and finding that the request is consistent with the Land Development Regulations set forth in sections 2.4.5(G)(1)(b).

Architectural Elevations:
Approve the architectural elevations for **McDonald's (2016-198)** located at **1220 Linton Blvd**., by adopting the findings of fact and law contained in the staff report, and finding that the request meets criteria set forth in LDR Section 4.6.18(E).

Landscape Plan:
Approve the landscape plan for **McDonald's (2016-198)** located at **1220 Linton Blvd**., by adopting the findings of fact and law contained in the staff report, and finding that the request meets criteria set forth in LDR Section 4.6.16 with the recommendation that the one tree that is removed to accommodate the ramp be replaced somewhere else on site.

Report Prepared By: Jennifer Buce, Assistant Planner

Attachments: Survey; Site Plan; Location Map; Architectural Elevations

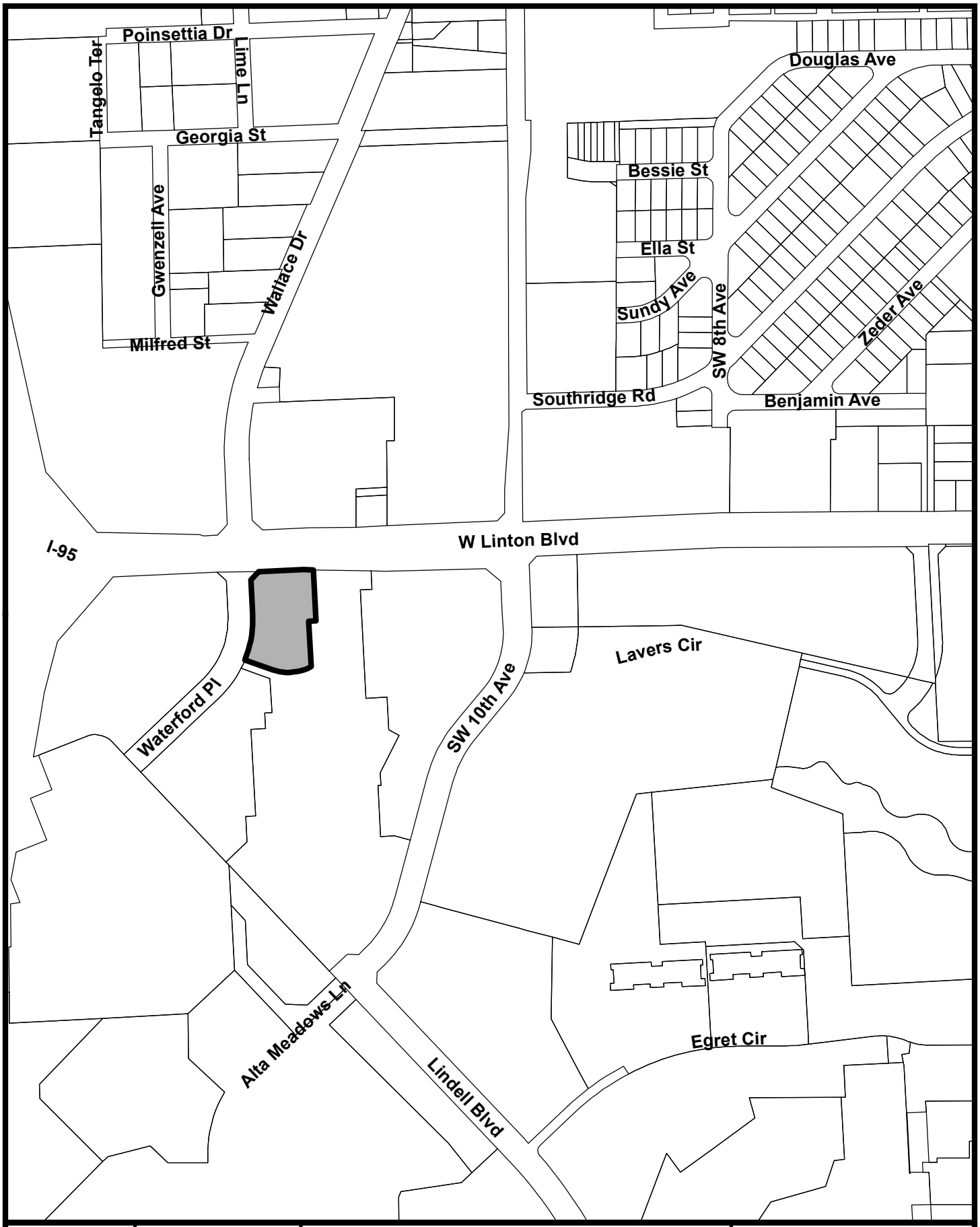

NORTH

PLANNING & ZONING DEPARTMENT

McDonalds
1220 West Linton Blvd.
LOCATION MAP

Subject Property

Document Path: S:\Planning & Zoning\DBMS\GIS\Project Maps\Location Maps\McDonalds_1220 W. Linton Blvd.mxd

SITE IMPROVEMENT PLAN

LINTON MRP

McDonald's®

1220 WEST LINTON BOULEVARD
DELRAY BEACH, FLORIDA
PARCEL ID# 12-43-46-29-33-002-0000
STORE No. 009-1060

OWNER/DEVELOPER
McDONALD'S USA, LLC
10150 HIGHLAND MANOR DR., SUITE 470
TAMPA, FLORIDA 33610
ATTN.: ROSANGELA DEMELLO.
PHONE: (954) 224-1174

ENGINEER
CPH, INC.
2216 ALTAMONT AVENUE
FORT MYERS, FLORIDA 33901
ATTN.: JOSHUA D. LOCKHART, P.E., LEED AP
PHONE: (239) 332-5499

ARCHITECT
CPH, INC.
500 WEST FULTON STREET
SANFORD, FLORIDA 32771
ATTN.: JOHN A. BAER, AIA, NCARB, LEED AP
PHONE: (407) 322-6841

SURVEYOR
CPH, INC.
500 WEST FULTON STREET
SANFORD, FLORIDA 32771
ATTN.: PAUL J. KATREK, PSM
PHONE: (407) 322-6841

LANDSCAPE ARCHITECT
CPH, INC.
500 WEST FULTON STREET
SANFORD, FLORIDA 32771
ATTN.: MAXWELL D. SPANN, RLA
PHONE: (407) 322-6841

PERMITTING AGENCIES
CITY OF DELRAY BEACH
PLANNING AND ZONING
100 NORTH WEST 1st AVENUE
DELRAY BEACH, FLORIDA 33444
ATTN.: REVIEWER
PHONE: (561) 243-7041

GENERAL STATEMENT
THE PURPOSE OF THIS PROJECT IS TO UPDATE THE BUILDING, AND BRING THE SITE INTO ADA COMPLIANCE.

LOCATION MAP
1" = 2,000'
PALM BEACH COUNTY, FLORIDA
SECTION 20-TOWNSHIP 46 SOUTH-RANGE 43 EAST

VICINITY MAP
1" = 200'

INDEX OF SHEETS

C-1 COVER SHEET
C-2 BOUNDARY & TOPOGRAPHIC SURVEY (COVER SHEET)
C-2A BOUNDARY & TOPOGRAPHIC SURVEY
C-3 SITE PLAN
C-4 GRADING AND EROSION AND SEDIMENTATION CONTROL PLAN
C-5 GENERAL DETAILS

Always call 811 two full business days before you dig
Sunshine811.com
www.sunshine811.com

NOTICE
THE SIZE OF THESE PLANS MAY HAVE BEEN SLIGHTLY ALTERED BY REPRODUCTION PROCESSES. THIS MUST BE CONSIDERED WHEN SCALING ANY REPRODUCED PLANS FOR THE PURPOSE OF COLLECTING DATA.

McDONALD'S PROJECT CODE: 009-1060

cph
www.cphcorp.com
A Full Service A & E Firm
Architects
Engineers
Environmental
Landscape Architects
M / E / P
Planners
Structural
Surveyors
Traffic / Transportation
Offices in:
• Florida
• Puerto Rico
• Connecticut
• Maryland

JOSHUA D. LOCKHART LICENSE No. 74011 STATE OF FLORIDA PROFESSIONAL ENGINEER
Joshua D. Lockhart P.E. No. 74011

No.	Date	Revision	By
1	01/24/17	Per City Comments	JDL
2	10/24/16	Per City Comments	JDL

Designed by: JDH
Drawn by: JDH
Chec ed by: RMM
Approved by: JDL
Scale: AS SHOWN
Date: Mar. 2016
Job No.: M29807.MRP

© 2017

Plans Prepared By:
CPH, Inc.
1992 SW 1st. St.
Miami, FL 33135
Ph: 305.274.4805
Licenses:
Eng. C.O.A. No. 3215
Survey L.B. No. 7143
Arch. Lic. No. AA26009926
Lndscp. Lic. No. LC0000298

COVER SHEET

McDonald's®
LINTON MRP
CITY OF DELRAY BEACH / FLORIDA

Sheet No.
C-1

J:\M29807.MRP\Civil\DWG\Design1 - M29807.MRP - COVER SHEET.DWG Jan 24, 2017 - 8:54am jmorales

BOUNDARY & TOPOGRAPHIC SURVEY
FOR
McDonald's®
L/C 009-1060
AT
1220 W LINTON BLVD, DELRAY BEACH
LYING IN
SECTION 29-TOWNSHIP 46 SOUTH-RANGE 43 EAST
PALM BEACH COUNTY, FLORIDA

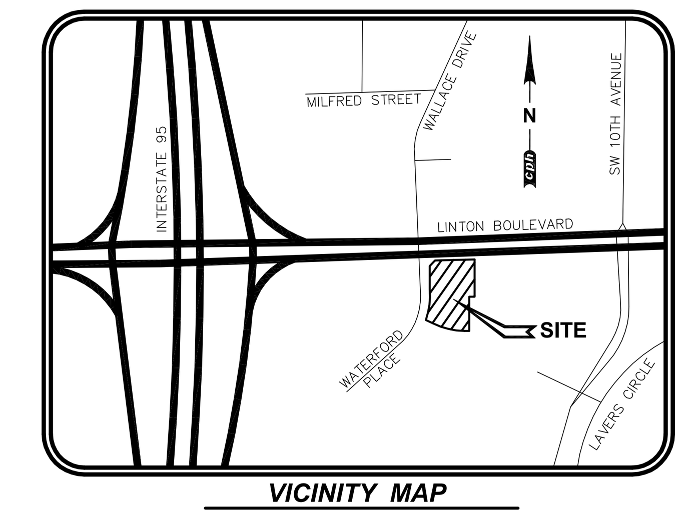

VICINITY MAP
NOT TO SCALE

Legal Description:
(PER SKETCH OF SURVEY PREPARED BY TIMOTHY J. MESSLER, INC. PROJECT NO. 89065A, DATED 7/11/90)

TRACT 2, "A REPLAT OF PARCEL 1, LINTON CENTER", AS RECORDED IN PLAT BOOK 65 AT PAGE 12 OF THE PUBLIC RECORDS OF PALM BEACH COUNTY, FLORIDA.

CONTAINING 1.435 ACRES MORE OR LESS.

Survey Notes:

1. "SURVEY MAP AND REPORT OR THE COPIES THEREOF ARE NOT VALID WITHOUT THE SIGNATURE AND THE ORIGINAL RAISED SEAL OF A FLORIDA LICENSED SURVEYOR AND MAPPER."
2. "ADDITIONS OR DELETIONS TO SURVEY MAPS OR REPORTS BY OTHER THAN THE SIGNING PARTY OR PARTIES IS PROHIBITED WITHOUT WRITTEN CONSENT OF THE SIGNING PARTY OR PARTIES."
3. THE SITE BENCHMARKS FOR THIS TOPOGRAPHIC SURVEY ARE DISPLAYED ON THE RESPECTIVE SURVEY FILE. THESE BENCHMARKS ARE BASED ON A CLOSED VERTICAL CONTROL LOOP HAVING AN ACTUAL ERROR OF CLOSURE OF 0.004' WHICH MEETS THE ALLOWABLE CLOSURE OF 0.019'. THIS FIELDWORK WAS PERFORMED USING A TOPCON PS-103A ROBOTIC TOTAL STATION AND REFERENCES THE FOLLOWING PUBLISHED BENCHMARKS AS ESTABLISHED BY THE NORTH AMERICAN VERTICAL DATUM OF 1988 (NAVD '88) AND SAID ELEVATIONS ARE BASED ON VERTICAL CONTROL BENCHMARKS SUPPLIED BY PALM BEACH COUNTY AND ARE AS FOLLOWS:

   a) BENCHMARK NAME = SCHWARZKOPF, CONC MONUMENT WITH PALM BEACH COUNTY BRASS DISK.
   NAVD '88 ELEVATION = 15.654

   b) BENCHMARK NAME = TOTAL VICTORY, CONC MONUMENT WITH PALM BEACH COUNTY BRASS DISK.
   NAVD '88 ELEVATION = 18.968

   SITE BENCHMARKS ARE AS SHOWN ON SHEET 2 OF 2.
4. THIS SURVEY IS NOT VALID WITHOUT SHEETS 1 THROUGH 2 OF 2.
5. THE LAST DAY FIELD WORK WAS PERFORMED WAS 1/24/16; ALL BOUNDARY CORNERS WERE RECOVERED OR SET AS NOTED HEREON.
6. THE "LEGAL DESCRIPTION" HEREON IS PER SKETCH OF SURVEY PREPARED BY TIMOTHY J. MESSLER, INC. PROJECT NO. 89065A, DATED 7/11/90 AND WAS PROVIDED BY THE CLIENT.
7. BEARINGS SHOWN HEREON ARE RELATIVE TO SOUTH RIGHT-OF-WAY LINE OF LINTON BOULEVARD PER "A REPLAT OF PARCEL 1, LINTON CENTER" RECORDED IN PLAT BOOK 65, PAGE 12 OF THE PUBLIC RECORDS OF PALM BEACH COUNTY, FLORIDA, HAVING A BEARING OF N 87°21'50" E.
8. HAVING CONSULTED THE NATIONAL FLOOD INSURANCE PROGRAM, FLOOD INSURANCE RATE MAP (FIRM) COMMUNITY PANEL NO. 125102-0006-D, CITY OF DELRAY BEACH, FLORIDA WITH EFFECTIVE DATE JANUARY 5, 1989, THE SUBJECT PROPERTY APPEARS TO LIE IN ZONE X (SHADED), WHICH ARE AREAS OF 500-YEAR FLOOD AND ALSO LIES IN ZONE AE (EL 12) WHICH ARE AREAS OF 100 YEAR FLOOD WITH BASE FLOOD ELEVATION DETERMINED AS 12.00 FEET (NGVD '29) 10.454 FEET (NAVD '88). THIS DETERMINATION WAS BASED ON A GRAPHIC INTERPOLATION OF SAID MAP AND NOT ON ACTUAL FIELD MEASUREMENTS.
9. THE APPARENT USE OF THE LAND, AS CLASSIFIED BY THE STANDARDS OF PRACTICE SET FORTH IN RULE CHAPTER 5J-17 OF THE FLORIDA ADMINISTRATIVE CODE, PURSUANT TO FS 472.027, ESTABLISHES THAT THE MINIMUM RELATIVE ACCURACY FOR THIS TYPE OF BOUNDARY SURVEY MEET THE HORIZONTAL CONTROL ACCURACY OF 1'/10,000 FEET FOR A HIGH RISK SURVEY. THE MEASUREMENTS AND CALCULATIONS OF THE CLOSED GEOMETRIC FIGURES WERE FOUND TO MEET THIS ACCURACY REQUIREMENT. THE EQUIPMENT USED TO VERIFY THE HORIZONTAL CONTROL ON THE SUBJECT SURVEY WAS A TOPCON GPS HIPER V.
10. HORIZONTAL WELL-IDENTIFIED FEATURES IN THIS SURVEY AND MAP HAVE BEEN MEASURED TO AN ESTIMATED HORIZONTAL POSITIONAL ACCURACY OF 0.05 (FT). THE EQUIPMENT USED TO LOCATE THE FEATURES WAS A TOPCON GPS HIPER V.
11. THIS SURVEY WAS PREPARED WITHOUT THE BENEFIT OF AN ABSTRACT OR OPINION OF TITLE. NO INSTRUMENTS OF RECORD REFLECTING EASEMENTS, RIGHTS-OF-WAY, AND/OR OWNERSHIP WERE FURNISHED TO THIS SURVEYOR EXCEPT AS NOTED.
12. NO UNDERGROUND UTILITIES, FOUNDATIONS OR IMPROVEMENTS, IF ANY, HAVE BEEN LOCATED EXCEPT AS SHOWN.
13. THIS SURVEY DOES NOT IDENTIFY THE LIMITS OR EXTENT OF POTENTIAL JURISDICTIONAL WETLAND BOUNDARIES.
14. FENCES EXISTING ON, OVER OR ADJACENT TO SUBJECT PROPERTY, ARE DISPLAYED HEREON; OWNERSHIP WHETHER SINGULAR OR JOINT WAS NOT DETERMINED BY THIS SURVEY.
15. VERTICAL FEATURE ACCURACY: "ELEVATIONS OF WELL-IDENTIFIED FEATURES CONTAINED IN THIS SURVEY AND MAP HAVE BEEN MEASURED TO AN ESTIMATED VERTICAL POSITIONAL ACCURACY OF 0.05 (FT)."
16. DIMENSIONS ARE SHOWN RELATIVE TO UNITED STATES STANDARD FEET AND DECIMALS THEREOF, UNLESS THE OBJECT SHOWN IS COMMONLY IDENTIFIED IN INCHES, I.E. TREE DIAMETER, PIPE DIAMETER, ETC. TREES DEPICTED ARE COMMON NAMES AND MEASURED AND LABELED AS DIAMETER AT BREAST HEIGHT IN INCHES.
17. CERTAIN INSTRUMENTS OF RECORD REFLECTING EASEMENTS, RIGHTS-OF-WAY, AND/OR OWNERSHIP WERE FURNISHED TO THIS SURVEYOR AS NOTED OR DISPLAYED HEREON.
18. THE UNDERGROUND UTILITIES DEPICTED BY PIPE LINETYPES ARE APPROXIMATE IN NATURE BASED UPON AN INSPECTION OF THE MANHOLE, GRATE, ETC. OF EACH FACILITY. EXISTING PIPES WERE NOT LAMPED OR REMOTELY VIEWED FOR OBSTRUCTIONS OR CONNECTIVITY.

Abbreviation Legend:

(A)	– ACTUAL	MH	– MANHOLE
A/C	– AIR CONDITIONER	MLP	– METAL LIGHT POLE
ACSM	– AMERICAN CONGRESS ON SURVEYING & MAPPING	MPH	– MILES PER HOUR
ADA	– AMERICANS WITH DISABILITIES ACT	MPP	– METAL POWER POLE
ALTA	– AMERICAN LAND TITLE ASSOCIATION	N/A	– NOT APPLICABLE
APPROX	– APPROXIMATE	NAVD	– NORTH AMERICAN VERTICAL DATUM
ARV	– AIR RELEASE VALVE	NAD	– NORTH AMERICAN DATUM
AVE	– AVENUE	NG	– NATURAL GROUND
AVG	– AVERAGE	NGS	– NATIONAL GEODETIC SURVEY
(BB)	– BEARING BASIS	NGVD	– NATIONAL GEODETIC VERTICAL DATUM
BFP	– BACK FLOW PREVENTER	N & D	– NAIL AND DISK
BLK	– BLOCK	NO.	– NUMBER
BLDG	– BUILDING	NR	– NON-RADIAL
BLVD	– BOULEVARD	NSPS	– NATIONAL SOCIETY OF PROFESSIONAL SURVEYORS
BM	– BENCH MARK	NT	– NON-TANGENT
BOC	– BACK OF CURB	NTS	– NOT TO SCALE
BOW	– BACK OF WALK	OD	– OUTSIDE DIAMETER
BSL	– BUILDING SETBACK LINE	ORB	– OFFICIAL RECORDS BOOK
BWF	– BARBED WIRE FENCE	OR	– OFFICIAL RECORDS
C-X	– DENOTES SHEET NUMBERING FOR ENGINEERING PLANS	OUL	– OVERHEAD UTILITY LINES
(C)	– CALCULATED	OTL	– OVERHEAD TRAFFIC LINES
C	– CHORD	(P)	– PLAT
CATV	– CABLE TELEVISION RISER	PB	– PLAT BOOK
CB	– CHORD BEARING	PC	– POINT OF CURVATURE
CBS	– CONCRETE BLOCK STRUCTURE	PCC	– POINT OF COMPOUND CURVATURE
C.C.R.	– CERTIFIED CORNER RECORD	PCP	– PERMANENT CONTROL POINT
C&G	– CURB & GUTTER	PFF	– PROPOSED FINISHED FLOOR
CI	– CATCH INLET	PG	– PAGE
C/L	– CENTERLINE	PGS	– PAGES
CLF	– CHAIN LINK FENCE	PI	– POINT OF INTERSECTION
CM	– CONCRETE MONUMENT	PIV	– POST INDICATOR VALVE
CMP	– CORRUGATED METAL PIPE	PK	– PARKER KAYLON
CO	– CLEANOUT	POB	– POINT OF BEGINNING
CONC	– CONCRETE	POC	– POINT OF COMMENCEMENT
COR	– CORNER	POL	– POINT ON LINE
CRPP	– CORRUGATED PLASTIC PIPE	PP	– POWER POLE
CUE	– COUNTY UTILITY EASEMENT	PRC	– POINT OF REVERSE CURVATURE
CWS	– CROSSWALK SIGNAL	PRM	– PERMANENT REFERENCE MONUMENT
Δ	– DELTA	PSM	– PROFESSIONAL SURVEYOR & MAPPER
(D)	– DESCRIPTION	PT	– POINT OF TANGENCY
DB	– DEED BOOK	PVC	– POLYVINYL CHLORIDE PIPE
DBH	– DIAMETER AT BREAST HEIGHT IN INCHES	PVMT	– PAVEMENT
DE	– DRAINAGE EASEMENT	R43E	– RANGE 43 EAST
DEPT	– DEPARTMENT	R	– RADIUS
DIP	– DUCTILE IRON PIPE	RAD	– RADIAL
DR	– DRIVE	RCP	– REINFORCED CONCRETE PIPE
D/U	– DRAINAGE AND UTILITY EASEMENT	REC	– RECOVERED
(E)	– ENGINEERING PLAN	REV	– REVISION
EJB	– ELECTRIC JUNCTION BOX	RP	– RADIUS POINT
EL	– UNDERGROUND ELECTRICAL LINES	R/W	– RIGHT-OF-WAY
ELEC	– ELECTRIC	RLS	– REGISTERED LAND SURVEYOR
ELEV	– ELEVATION	RP	– RADIUS POINT
ELLIP	– ELLIPTICAL	RWL	– UNDERGROUND RECLAIM WATER LINE
EOI	– END OF INFORMATION	RWM	– RECLAIMED WATER METER
EOP	– EDGE OF PAVEMENT	SE	– SPECIAL EASEMENT
FB	– FIELD BOOK	SEC 29	– SECTION 29
FDOT	– FLORIDA DEPARTMENT OF TRANSPORTATION	SMH	– SANITARY SEWER MANHOLE
FF	– FINISH FLOOR	(SP)	– STATE PLANE
FGI	– FLAT GRATE INLET	SQ	– SQUARE
FGLP	– FIBERGLASS LIGHT POLE	SQ FT	– SQUARE FEET
FHYD	– FIRE HYDRANT	ST	– STREET
FM	– FORCE MAIN	STMH	– STORM DRAINAGE MANHOLE
FND	– FOUND	S/W	– SIDEWALK
FP&L	– FLORIDA POWER AND LIGHT	TB	– TANGENT BEARING
FS	– FLORIDA STATUTES	T43S	– TOWNSHIP 43 SOUTH
(G)	– GRID (STATE PLANE)	TELE	– TELEPHONE
GL	– UNDERGROUND GAS LINES	TL	– OVERHEAD TRAFFIC SIGNAL LINES
GOV'T	– GOVERNMENT	TOB	– TOP OF BANK
GPR	– GROUND PENETRATING RADAR	TOE	– TOE OF SLOPE
GTMH	– GREASE TRAP MANHOLE	TR	– TELEPHONE RISER
HDPE	– HIGH DENSITY POLYETHYLENE PIPE	TRANS	– TRANSFORMER
HWF	– HOG WIRE FENCE	TSB	– TRAFFIC SIGNAL BOX
ID	– IDENTIFICATION	TSSP	– TRAFFIC SIGNAL SUPPORT POLE
ICV	– IRRIGATION CONTROL VALVE	TVL	– UNDERGROUND CABLE TV LINES
INFO	– INFORMATION	(TYP)	– TYPICAL
INV	– INVERT	UE	– UTILITY EASEMENT
IP	– IRON PIPE	UNK	– UNKNOWN
IP&C	– IRON PIPE & CAP	UTL	– UNDERGROUND TELEPHONE LINES
IR	– IRON ROD	W/	– WITH
IR&C	– IRON REBAR & CAP	WL	– UNDERGROUND WATER LINE
IRR	– IRRIGATION	WLP	– WOOD LIGHT POLE
L	– ARC LENGTH	WM	– WATER METER
LB#	– LICENSED BUSINESS NUMBER	WP	– WORK PROGRAM
LP	– LIGHT POLE	WPF	– WOOD POST FENCE
(M)	– MEASURED	WPP	– WOOD POWER POLE
MB	– MAP BOOK	WV	– WATER VALVE
MBX	– MAILBOX		
MES	– MITERED END SECTION		

Line Legend:
NOT TO SCALE

- = 1 FOOT CONTOURS
- = 5 FOOT CONTOURS
- = ADJOINER PROPERTY LINES
- = BARBED WIRE FENCE
- = BROKEN LINE
- UC = BURIED CABLE
- UCTV = BURIED CABLE TELEVISION
- UE = BURIED ELECTRIC
- UFO = BURIED FIBER OPTICS
- UG = BURIED GAS
- URW = BURIED RECLAIMED WATER LINE
- SAN = BURIED SANITARY LINES
- FM = BURIED SANITARY SEWER FORCE MAIN LINE
- TC = BURIED TRAFFIC CONTROL
- UT = BURIED TELEPHONE LINE
- UW = BURIED WATER LINES
- = CENTER LINE R/W
- = CHAIN LINK FENCE
- = EASEMENT LINES (EXISTING)
- = EASEMENT LINES (PROPOSED)
- EOW = EDGE OF WATER LINES
- = EXISTING DRAINAGE PIPES
- = EXISTING DRAINAGE PIPES (OUTFALL NOT LOCATED)
- FW = FIRE WATER MAIN LINES
- HW = HOT WATER SUPPLY LINES
- IRR = IRRIGATION LINES
- OTL = OVERHEAD TRAFFIC LINES
- OHU = OVERHEAD UTILITY LINES
- = RAILROAD TRACKS
- = RIGHT-OF-WAY LINES
- = SECTION LINES
- = STONE WALL LINES
- TOB = TOP OF BANK LINES
- TOE = TOE OF SLOPE LINES
- = TREE LINES
- TRAV = TRAVERSE LINES
- UNK = UNKNOWN BURIED LINES
- = VINYL FENCE
- = WOOD FENCE
- = WETLAND LINE

Symbol Legend:
NOT TO SCALE

- ARV – AIR RELEASE VALVE
- – BORING HOLE LOCATION
- – BRICK PAVERS
- CTV – CABLE TV RISER
- – CENTRAL ANGLE
- – CONCRETE
- CO – CLEAN OUT
- – CONCRETE MITERED END SECTION
- – CONCRETE RIP RAP
- – CONCRETE UTILITY POLE
- 41 – COUNTY ROAD SYMBOL
- – DUAL SUPPORT SIGN
- E – ELECTRICAL MANHOLE
- EJB – ELECTRICAL JUNCTION BOX
- EO – ELECTRIC OUTLET
- E – ELECTRIC RISER
- – FIRE HYDRANT
- – FLOOD LIGHT
- – FOUND CONCRETE MONUMENT (AS NOTED)
- – FOUND IRON PIPE (AS NOTED)
- – FOUND IRON REBAR (AS NOTED)
- – FOUND/SET NAIL (AS NOTED)
- – GARBAGE CAN
- GV – GAS VALVE
- GT – GOPHER TORTOISE HOLE
- – GRATE INLET
- G – GREASE TRAP MANHOLE
- – GUY ANCHOR
- – HANDICAP PARKING SPACE
- 95 – INTERSTATE SYMBOL
- ICV – IRRIGATION CONTROL VALVE
- – CONCRETE LIGHT POLE
- – LIGHT POLE
- – LIGHT POLE (DUAL)
- – LIGHT POLE (TRIPLE)
- – LIGHT POLE (QUAD)
- – MAILBOX
- MW – MONITOR WELLS
- – NAIL & DISC (AS NOTED)
- PBX – PULL BOX (AS NOTED)
- 2 – PARKING SPACES (2)
- 3 – REVISION NUMBER (3)
- RWM – RECLAIMED WATER METER
- RWV – RECLAIMED WATER VALVE
- – ROOF DRAIN
- S – SANITARY SEWER MANHOLE
- SV – SANITARY SEWER VALVE
- 8 – SCHEDULE B ITEM NUMBER (8)
- – GROUND LIGHT
- – SECTION CORNER
- – 4" X 4" CM LB #7143
- – 5/8" IR&C LB #7143
- – SIGN
- – SITE BENCH MARK
- D – STORM SEWER MANHOLE
- – STRIPING (DIRECTIONAL)
- T – TELEPHONE CABLE RISER
- T – TELEPHONE MANHOLE
- TJB – TELEPHONE JUNCTION BOX
- TH – TEST HOLE
- TSB – TRAFFIC SIGNAL BOX
- – TRAFFIC SIGNAL SUPPORT POLE
- WM – WATER METER
- WS – WATER SERVICE
- – WATER SPIGOT
- WS – WATER SPRINKLER
- WV – WATER VALVE
- W – WELL
- – WETLAND FLAG
- – WOOD UTILITY POLE
- U – UNKNOWN MANHOLE
- – CONCRETE PAVERS
- – DETECTABLE WARNING AREA
- – CONCRETE LIGHT POLE (DUAL)
- – CONCRETE LIGHT POLE (TRIPLE)
- – CONCRETE LIGHT POLE (QUAD)
- UNK – UNKNOWN RISER
- – VENT (AS NOTED)
- 1 – WIRE HEIGHTS (SEE CHART)
- – CROSSWALK SIGNAL POLE

Sign Legend:
NOT TO SCALE

(R1)	ROW NUMBER SIGN
(B)	BUS STOP SIGN
(DE)	DEAD END SIGN
(DNE)	DO NOT ENTER SIGN (R5-1)
(HC)	HANDICAP SIGN
(HC)	DUAL HANDICAP SIGN
(KR)	KEEP RIGHT SIGN
(LTO)	LEFT TURN ONLY
(ME)	MEDIAN SIGN
(ND)	NO DUMPING SIGN
(NL)	NO LEFT TURN SIGN (R3-2)
(NLI)	NO LITTERING SIGN
(NO)	NO OUTLET SIGN
(FL)	NO PARKING FIRE LANE SIGN
(NOR)	NO RIGHT TURN SIGN (R3-1)
(NTT)	NO THRU TRAFFIC SIGN
(NOT)	NO TRUCKS (R5-2)
(NP)	NO PARKING SIGN
(1W)	ONE WAY SIGN (R6-2)
(PE)	PEDESTRIAN CROSSING SIGN
(RTO)	RIGHT TURN ONLY
(SL)	SPEED LIMIT SIGN
(ST)	STOP SIGN (R1-1)
(SS)	STREET SIGN
(TZ)	TOW AWAY ZONE SIGN
(TE)	TRUCK ENTRANCE SIGN
(U)	UNKNOWN SIGN
(WL)	WEIGHT LIMIT SIGN
(WW)	WRONG WAY SIGN
(Y)	YIELD SIGN

Reference Material

1) "A REPLAT OF PARCEL 1, LINTON CENTER" RECORDED IN PLAT BOOK 65, PAGE 12 OF THE PUBLIC RECORDS OF PALM BEACH COUNTY, FLORIDA.
2) SKETCH OF SURVEY PREPARED BY TIMOTHY J. MESSLER, INC. PROJECT NO. 89065A, DATED 7/11/90.

Parking Table

STANDARD SPACES =	52
RESERVED DRIVE-THRU SPACES =	0
ACCESSIBLE HANDICAP SPACES =	2
TOTAL SPACES =	54

NOTE:
THIS SURVEY IS NOT VALID WITHOUT SHEETS 1 THROUGH 2 OF 2.

TITLE BLOCK ABBREVIATIONS
Eng. = ENGINEERING L.B. = LICENSED BUSINESS
C.O.A. = CERTIFICATE OF AUTHORIZATION Arch. = ARCHITECTURAL
Landscp. = LANDSCAPE N/A = NOT APPLICABLE Lic. = LICENSED
No. = NUMBER P.O. = POST OFFICE © = COPYRIGHT

Index of Sheets

1 COVER SHEET
2 BOUNDARY AND TOPOGRAPHIC SURVEY

C-2

Surveyor's Certification:

Certified to: McDonald's Restaurants of Florida, a Florida Corporation

I hereby certify to McDonald's Corporation that this plan has been compiled from a survey actually made on the ground under my supervision on January 24, 2016; that it is correct and complies with the modified requirements provided by McDonald's Corporation.

And

I hereby certify that the attached "Boundary & Topographic Survey" of the hereon described property is true and correct to the best of my knowledge, information and belief as surveyed in the field on January 24, 2016. I further certify that this "Boundary & Topographic Survey" meets the standards of practice set forth in Rule Chapter 5J-17 of the Florida Administrative Code, pursuant to FS 472.027.

For the Firm By: ______________________________

Paul J. Katrek
Professional Surveyor and Mapper
Florida Registration No. 6233

cph
www.cphcorp.com
A Full Service A & E Firm
Architects
Engineers
Landscape Architects
M / E / P
Planners
Structural
Surveyors
Traffic / Transportation
Development Coordination
Offices in:
• Florida
• Puerto Rico
• Connecticut
• Maryland
• Texas

No.	Date	Revision	By
1			
2			
3			
4			
5			
6			
7			

Field Crew:	L.S.
Drawn by:	J.A.B.
Checked by:	R.L.R.
Approved by:	P.J.K.
Scale:	N/A
Date:	1/24/16
Job No.:	M29907.MRP
File: M29907.MRP.dwg	© 2016

Survey Prepared By:
CPH, Inc.
500 West Fulton St.
Sanford, Fl. 32771
Ph: 407.322.6841
Licenses:
Eng. C.O.A. No. 3215
Survey L.B. No. 7143
Arch. Lic. No. AA2600926
Lndscp. Lic. No. LC0000298

BOUNDARY & TOPOGRAPHIC SURVEY
McDonald's®
L/C 009-1060
1220 W LINTON BLVD, DELRAY BEACH
SECTION 29-TOWNSHIP 46 SOUTH-RANGE 43 EAST
PALM BEACH COUNTY, FLORIDA

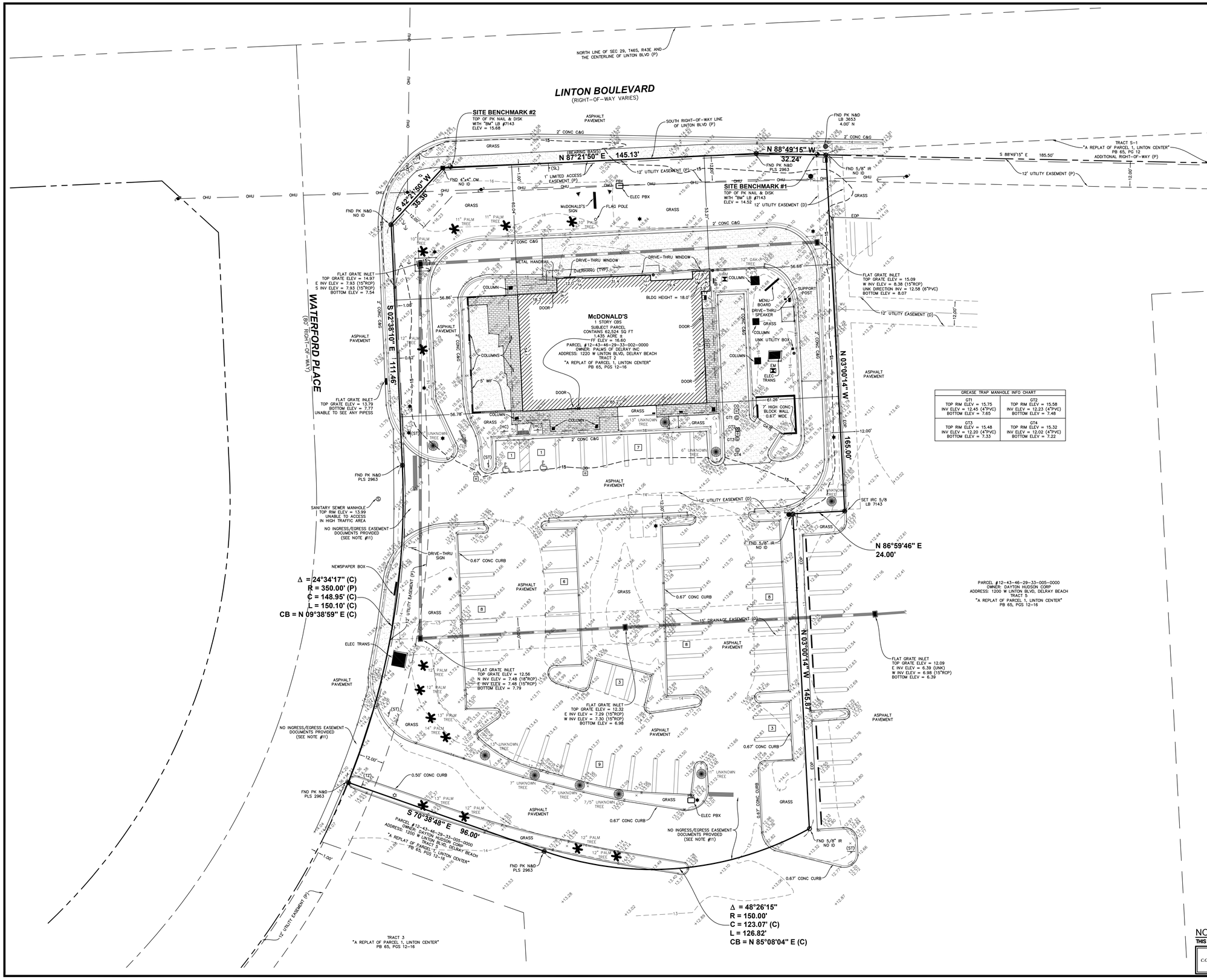

GREASE TRAP MANHOLE INFO CHART	
GT1 TOP RIM ELEV = 15.75 INV ELEV = 12.45 (4"PVC) BOTTOM ELEV = 7.65	GT2 TOP RIM ELEV = 15.58 INV ELEV = 12.23 (4"PVC) BOTTOM ELEV = 7.48
GT3 TOP RIM ELEV = 15.48 INV ELEV = 12.20 (4"PVC) BOTTOM ELEV = 7.33	GT4 TOP RIM ELEV = 15.32 INV ELEV = 12.02 (4"PVC) BOTTOM ELEV = 7.22

GRAPHIC SCALE

20 0 10 20 40

(IN FEET)
1 inch = 20 ft.

NOTE:
THIS SURVEY IS NOT VALID WITHOUT SHEETS 1 THROUGH 2 OF 2.

TITLE BLOCK ABBREVIATIONS
Eng. = ENGINEERING L.B. = LICENSED BUSINESS
C.O.A. = CERTIFICATE OF AUTHORIZATION Arch.= ARCHITECTURAL
Landscp. = LANDSCAPE N/A = NOT APPLICABLE Lic. = LICENSED
No. = NUMBER P.O. = POST OFFICE © = COPYRIGHT

C-2A

cph
www.cphcorp.com
A Full Service A & E Firm
Architects
Engineers
Landscape Architects
M / E / P
Planners
Structural
Surveyors
Traffic / Transportation
Development Coordination
Offices in:
• Florida
• Puerto Rico
• Connecticut
• Maryland
• Texas

No.	Date	Revision	By
1			
2			
3			
4			
5			
6			
7			

Field Crew:	L.S.
Drawn by:	J.A.B.
Checked by:	R.L.R.
Approved by:	P.J.K.
Scale:	1"=20'
Date:	1/24/16
Job No.:	M23907.MRP
File:	M23907-MRP.dwg

© 2016

Survey Prepared By:
CPH, Inc.
500 West Fulton St.
Sanford, Fl. 32771
Ph: 407.322.6841
Licenses:
Eng. C.O.A. No. 3215
Survey L.B. No. 7143
Arch. Lic. No. AA2600926
Lndscp. Lic. No. LC0000298

BOUNDARY & TOPOGRAPHIC SURVEY

McDonald's®
LJC-009-1061
1220 W LINTON BLVD, DELRAY BEACH
SECTION 29-TOWNSHIP 46 SOUTH-RANGE 43 EAST
PALM BEACH COUNTY, FLORIDA

Sheet No.
2
of 2

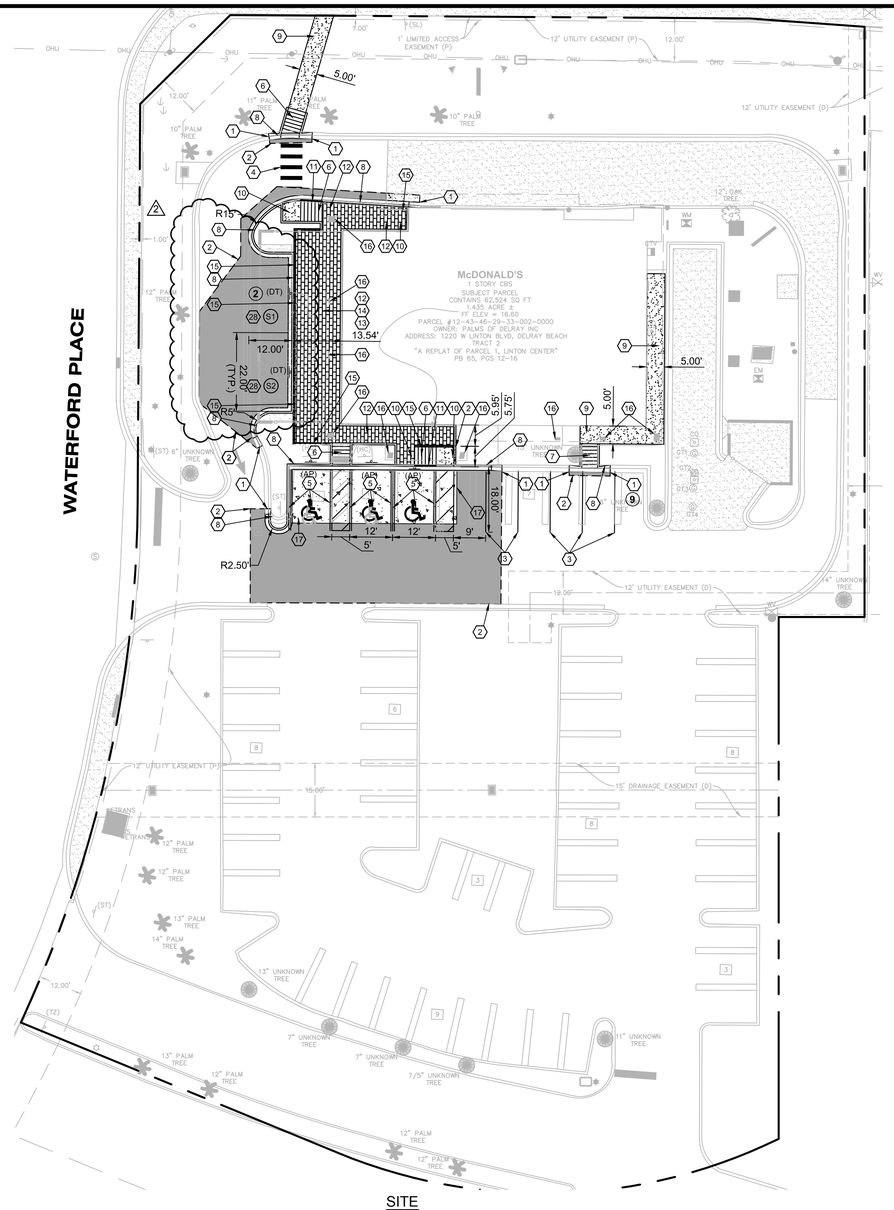

SITE
1" = 20'

N

GRAPHIC SCALE
0 10 20 40
1 INCH = 20 FEET

SITE PLAN KEYNOTE LEGEND

1. NEATLY SAW-CUT, REMOVE AND MATCH EXISTING CURB AND GUTTER AND PAVEMENT WITH A SMOOTH TRANSITION.
2. PROPOSED SAW-CUT LIMITS.
3. PROPOSED PARKING STRIPING. PER CITY OF DELRAY BEACH SPECIFICATIONS.
4. PROPOSED CROSS WALK STRIPING. SEE DETAIL, SHEET C-5.
5. PROPOSED ACCESSIBLE STRIPING. SEE DETAIL, SHEET C-5.
6. PROPOSED ACCESSIBLE RAMP 1:12 MAX. RUNNING SLOPE, 2% MAX. CROSS SLOPE PER FDOT INDEX NO. 304, SEE DETAIL, SHEET C-5.
7. PROPOSED SERVICE / DELIVERY RAMP.
8. PROPOSED CURB AND GUTTER. STANDARD CURBING SHOWN SHADED. SEE DETAIL, SHEET C-5.
9. PROPOSED CONCRETE SIDEWALK PER FDOT INDEX #310 (5% MAX. LONGITUDINAL SLOPE, 2% MAX. CROSS SLOPE).
10. PROPOSED 5' X 5' MIN. SIDEWALK LANDING PER FDOT INDEX #310, 2% MAX. SLOPE IN ALL DIRECTIONS.
11. PROPOSED NOSE DOWN CURBING. SEE DETAIL, SHEET C-5.
12. PROPOSED CONCRETE PAVERS PER McDONALD'S SPECIFICATIONS BOUNDED BY 6" RIBBON CURB (5% MAX. LONGITUDINAL SLOPE, 2% MAX. CROSS SLOPE).
13. PROPOSED OUTDOOR ENVIRONMENTS. A MINIMUM OF 5% PATIO TABLES TO BE ACCESSIBLE. PROVIDE 30" WIDTH, 27" KNEE CLEARANCE, AND 19" OF UNOBSTRUCTED DEPTH. IDENTIFY WITH SIGNAGE.
14. PROPOSED PATIO AREA: CONCRETE PAVERS PER MCDONALD'S SPECIFICATIONS BOUNDED BY 6" RIBBON CURB (2% MAX. SLOPE IN ANY DIRECTION).
15. PROPOSED DECORATIVE ALUMINUM RAILING PER MCDONALD'S SPECIFICATIONS.
16. REMOVE EXISTING COLUMNS.
17. PROPOSED CONCRETE PAVEMENT. SEE DETAIL, SHEET C-5.

DEMOLITION KEYNOTE LEGEND

1. PROTECT AND SAVE EXISTING COLUMN(S).
2. NEATLY SAW-CUT & REMOVE EXISTING CURB, GUTTER, FENCE AND PAVEMENT, AS APPLICABLE.
3. PROTECT & SAVE EXISTING UTILITIES.
4. REMOVE & RELOCATE EXISTING SIGNS.
5. REMOVE EXISTING PAVERS / SIDEWALK.
6. REMOVE EXISTING STRIPING.

= PROPOSED AREAS OF DEMOLITION.

X = TREE TO BE REMOVED (RE. TO LANDSCAPE PLAN)

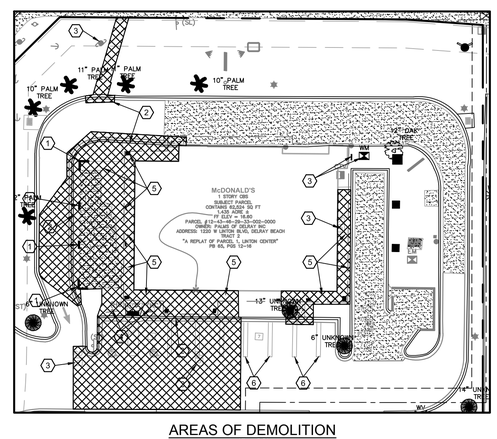

AREAS OF DEMOLITION
1" = 30'

SITE DATA

THE PURPOSE OF THIS PROJECT IS TO UPDATE THE BUILDING, AND BRING THE SITE INTO ADA COMPLIANCE.

SITE ADDRESS: 1220 WEST LINTON BOULEVARD DELRAY BEACH, FLORIDA 33445

PARCEL I.D. NUMBER: 12-43-46-29-33-002-0000

SITE TOTAL AREA: 62,524 S.F. (1.435 A.C.±)

EXISTING LAND USE: FAST FOOD WITH DRIVE THRU

PROPOSED LAND USE: FAST FOOD WITH DRIVE THRU

EXISTING USE: McDONALD'S RESTAURANT

PROPOSED USE: McDONALD'S RESTAURANT

ZONING:
SUBJECT SITE: PC - PLANNED COMMERCIAL
NORTH: WEST LINTON BOULEVARD
EAST: PC - PLANNED COMMERCIAL
SOUTH: PC - PLANNED COMMERCIAL
WEST: WATERFORD PLACE

PROPOSED AREA CALCULATIONS:
BUILDING AREA: = 5,036 S.F. (8.05 □)
PATIO AREA: = 500 S.F. (0.80 □)
IMPERVIOUS AREA: = 36,249 S.F. (57.98 □)
PERVIOUS AREA: = 20,738 S.F. (33.17 □)

EXISTING AREA CALCULATIONS:
BUILDING AREA: = 5,011 S.F. (8.02 □)
PATIO AREA: = 1,308 S.F. (2.09 □)
IMPERVIOUS AREA: = 35,251 S.F. (56.38 □)
PERVIOUS AREA: = 20,954 S.F. (33.51 □)

TOTAL: = 62,524 S.F. (100.00 □)

SITE NOTES

1. EXISTING UTILITIES ARE SHOWN IN SCHEMATIC ONLY. CONTRACTOR SHALL USE DUE REGARD WHEN PERFORMING ANY SITE DEMOLITION.
2. ALL ELEVATIONS SHOWN ARE IN REFERENCE TO THE BENCHMARK AND MUST BE VERIFIED BY THE GENERAL CONTRACTOR AT GROUNDBREAK.
3. FINISH WALK AND CURB ELEVATIONS SHALL BE 6" ABOVE FINISH PAVEMENT.
4. DIMENSIONS SHOWN ARE TO THE FACE OF CURB UNLESS SHOWN (BOC) WHICH INDICATES BACK OF CURB.
5. CONTRACTOR TO SEAL AND RE-STRIPE AFFECTED PARKING AREA. STRIPING TO BE REPLACED AS EXISTING EXCEPT WHERE NOTED OTHERWISE.
6. ADJUST ALL MANHOLE RINGS AND CLEAN OUT COVERS TO BE FLUSH WITH FINISHED GRADE. ALL PARTS TO BE TRAFFIC BEARING (AASHTO H-20 LOADING).
7. THE CONTRACTOR SHALL COORDINATE WITH ALL UTILITY COMPANIES TO DETERMINE EXACT POINT OF SERVICE CONNECTION AT EXISTING UTILITY. REFER TO THE BUILDING ELECTRICAL AND PLUMBING DRAWINGS FOR UTILITY SERVICE ENTRANCE LOCATIONS, SIZES, AND CIRCUITING.
8. MODIFY ALL NON-COMPLIANT EXTERIOR DOOR HARDWARE, AS NECESSARY, TO COMPLIANT LARGE OFFSET D-PULL DOOR HARDWARE.
9. ENSURE ACCESSIBILITY STICKERS ARE PLACED ON ALL APPLICABLE DOORS.
10. ENSURE SPEECH/HEARING IMPAIRED SIGNAGE IS PROVIDED AT COD, CASHIER WINDOW & PRESENTER WINDOW.
11. TRANSITIONS TO BE FLUSH ALL ALONG THE ACCESSIBLE ROUTE. CONTRACTOR SHALL ENSURE THE MAXIMUM CONSTRUCTED LEVEL TRANSITION AT EVERY JOINT DOES NOT EXCEED THE MAXIMUM ALLOWABLE UNDER THE ADA AFTER SETTLEMENT, EXPANSION, CONTRACTION, ETC. CHANGES IN LEVEL OF 1/4" HIGH MAXIMUM SHALL BE PERMITTED TO BE VERTICAL. CHANGES IN LEVEL BETWEEN 1/4" HIGH MINIMUM AND 1/2" HIGH MAXIMUM SHALL BE BEVELED WITH A SLOPE NOT STEEPER THAN 1:2.
12. FILL EXPANSION / CONTROL JOINT WITH EXTERIOR GRADE CONCRETE EXPANSION JOINT CAULKING. FILL ENTIRE LENGTH OF JOINT SUCH THAT ANY CHANGE IN ELEVATION DOES NOT EXCEED 1/4" IN ELEVATION FROM THE ADJACENT CONCRETE SURFACES WHEN CAULKING HAS CURED. FOR JOINTS WITH VOIDS DEEPER THAN 1/2", INSTALL CONTINUOUS FIBERBOARD EXPANSION JOINT FILLER BELOW CAULKING TO SUPPORT CAULKING ABOVE.
13. CONTRACTOR TO REPLACE DAMAGED PLANT MATERIAL, INCLUDING SOD, IMPACTED BY CONSTRUCTION ACTIVITIES IN ACCORDANCE WITH THE LANDSCAPE PLAN.
14. CONTRACTOR TO MODIFY IRRIGATION AS NECESSARY TO ACCOMMODATE NEW LANDSCAPE.

SITE LEGEND

(COD) = EXISTING CUSTOMER ORDER DISPLAY
(M) = EXISTING MENU BOARD
= PROPOSED DETECTOR LOOP
= PROPOSED CONCRETE PAVEMENT
= PROPOSED SIDEWALK
= PROPOSED ASPHALT PAVEMENT/RE-GRADING
SYSL/6" = SINGLE YELLOW SOLID LINE / 6" WIDE
SWSL/4" = SINGLE WHITE SOLID LINE / 4" WIDE
DYSL/4" = DOUBLE YELLOW SOLID LINE / 4" WIDE
(A) = ORDER WINDOW
(B) = PRESENTER WINDOW
= EXISTING PARKING COUNT
(X) = PROPOSED PARKING COUNT
(R) = RESERVED DRIVE-THRU PARKING SPACE
(AP) = ACCESSIBLE PARKING SIGN (FTP-25)
(DE) = DO NOT ENTER SIGN (R5-1)
(S) = STOP SIGN (R1-1)
(RT) = RIGHT TURN ONLY SIGN (R3-5R)
(NL) = NO LEFT TURN SIGN (R3-2)
(DT) = RESERVED DRIVE-THRU PARKING SIGN

Always call 811 two full business days before you dig
Sunshine811.com
www.sunshine811.com

PARKING INFORMATION

TOTAL SPACES REQUIRED **60**	12 SPACES PER 1,000 SF OF GFA UP TO 6,000 SF (5,011 SF / 1,000 SF) X 12 = 60 PARKING SPACES
TOTAL SPACES EXISTING **54**	52 EXISTING SPACES 2 EXISTING ACCESSIBLE SPACES
TOTAL SPACES PROVIDED **56**	51 PROPOSED SPACES 3 PROPOSED ACCESSIBLE SPACES 2 PROPOSED PARALLEL SPACES

McDONALD'S PROJECT CODE: 009-1060

cph
www.cphcorp.com
A Full Service A & E Firm
Architects
Engineers
Environmental
Landscape Architects
M / E / P
Planners
Surveyors
Traffic / Transportation
Offices in:
• Florida
• Puerto Rico
• Connecticut
• Maryland
JOSHUA D. LOCKHART LICENSE No. 74011 STATE OF FLORIDA PROFESSIONAL ENGINEER
Joshua D. Lockhart P.E. No. 74011

No.	Date	By
1	01/24/17	JDL
2	10/24/16	JDL

Designed by: JDH
Drawn by: JDH
Chec ed by: RMM
Approved by: JDL
Scale: AS SHOWN
Date: Mar. 2016
Job No.: M29907.MRP
© 2017

Plans Prepared By:
CPH, Inc.
1992 SW 1st. St.
Miami, FL 33135
Ph: 305.274.4805
Licenses:
Eng. C.O.A. No. 3215
Survey L.B. No. 7143
Arch. Lic. No. AA2600926
Lndscp. Lic. No. LC0000298

SITE PLAN

McDonald's
LINTON MRP
CITY OF DELRAY BEACH / FLORIDA

Sheet No.
C-3

J:\M29907.MRP\Civil\DWG\Design\3 - M29907.MRP - SITE.dwg Jan 24, 2017 - 8:35am jallen

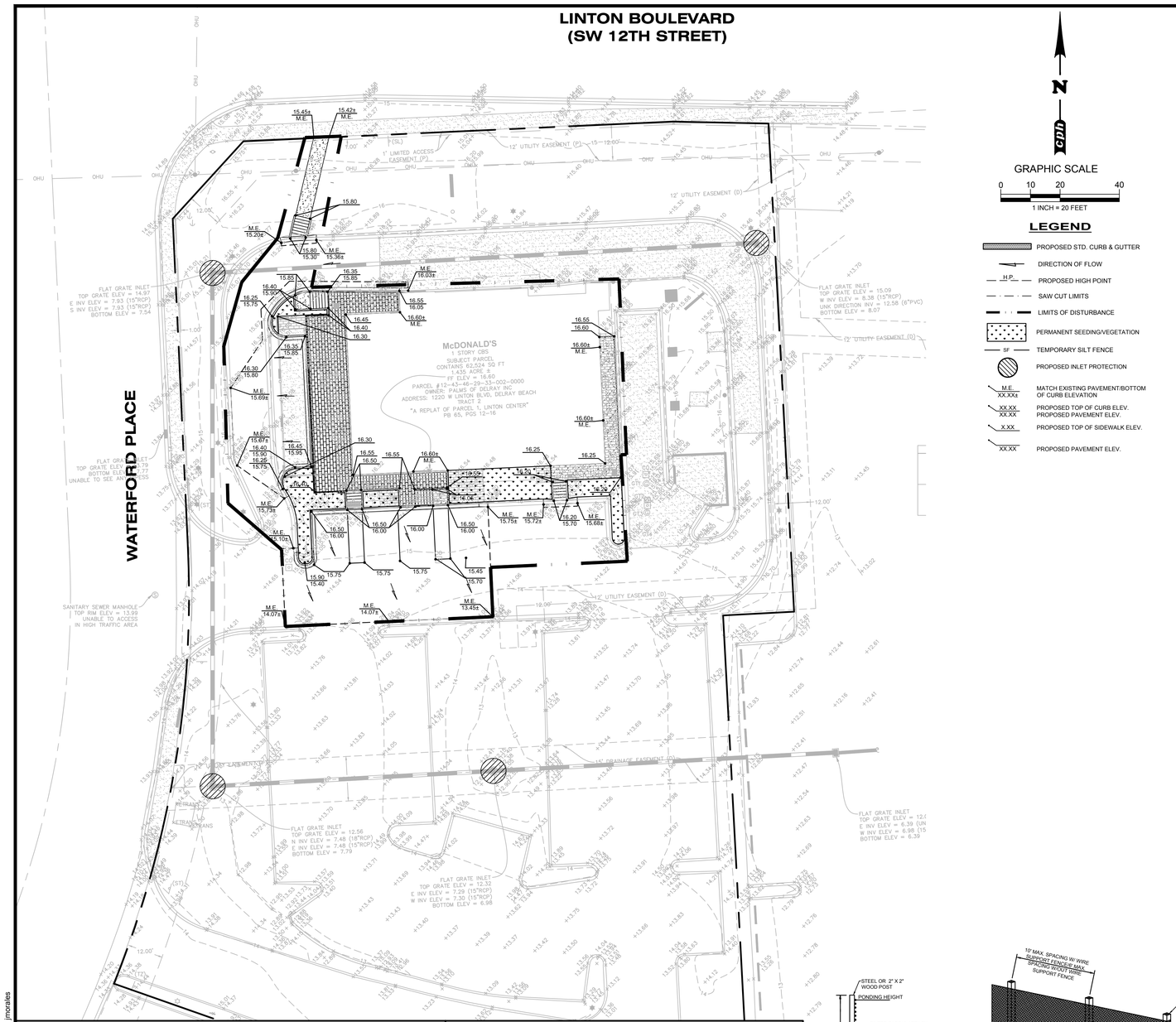

LEGEND

- PROPOSED STD. CURB & GUTTER
- DIRECTION OF FLOW
- H.P. — PROPOSED HIGH POINT
- SAW CUT LIMITS
- LIMITS OF DISTURBANCE
- PERMANENT SEEDING/VEGETATION
- SF — TEMPORARY SILT FENCE
- PROPOSED INLET PROTECTION
- M.E. / XX.XXα — MATCH EXISTING PAVEMENT/BOTTOM OF CURB ELEVATION
- XX.XX / XX.XX — PROPOSED TOP OF CURB ELEV. / PROPOSED PAVEMENT ELEV.
- X.XX — PROPOSED TOP OF SIDEWALK ELEV.
- XX.XX — PROPOSED PAVEMENT ELEV.

EROSION AND SEDIMENT CONTROL PLAN NOTES

SITE DESCRIPTION

A. SITE LOCATION:
THE SITE IS LOCATED AT :1220 WEST LINTON BOULEVARD, DELRAY BEACH, FLORIDA

B. SITE CONDITIONS & ACTIVITIES NARRATIVE:
THE EXISTING CONDITION OF THE SITE IS DEVELOPED WITH AN EXISTING McDONALD'S RESTAURANT. THE SITE WILL REMAIN AT APPROXIMATELY THE SAME GRADE AND HAVE NO MAJOR EFFECT ON ABUTTING PROPERTIES.

WETLANDS/BUFFERS

"NO WETLANDS OR BUFFERS ARE ASSOCIATED WITH THIS PROJECT".

PLAN INTENT

THE INTENT OF THIS PLAN IS TO PREVENT THE RELEASE OF SOILS, TRASH, CHEMICALS, TOXINS AND OTHER POLLUTANTS, BY WATER , AIR, VEHICLE TRANSPORT OR OTHER MEANS THAT CAN IMPACT STORM WATER QUALITY. THE CONTRACTOR SHALL ENSURE THAT THE BMP'S ARE INSTALLED AND THE EXECUTION OF THE WORK IS PERFORMED TO MEET THE INTENT OF APPLICABLE LAWS, REGULATIONS AND THIS PLAN.

GENERAL NOTES

A. NO RECORD OF AN ENVIRONMENTAL RESOURCE PERMIT FROM THE SOUTH FLORIDA WATER MANAGEMENT DISTRICT WAS AVAILABLE FOR REVIEW.

MS4 OPERATOR NAME (IF ANY): N/A

THE CONTRACTOR SHALL COORDINATE WITH THE MS4 TO ENSURE THAT ALL SPECIFIC REQUIREMENTS ARE MET.

B. WHERE PRACTICAL, STORMWATER SHALL BE CONVEYED BY SWALES. SWALES SHALL BE CONSTRUCTED AS SHOWN ON PLANS.

C. EROSION CONTROL MEASURES SHALL BE EMPLOYED TO MINIMIZE TURBIDITY OF SURFACE WATERS LOCATED DOWNSTREAM OF ANY CONSTRUCTION ACTIVITY, WHILE THE VARIOUS MEASURES REQUIRED WILL BE SITE SPECIFIC, THEY SHALL BE EMPLOYED AS NEEDED IN ACCORDANCE WITH THE FOLLOWING:

I. IN GENERAL, EROSION SHALL BE CONTROLLED AT THE FURTHEST PRACTICAL UPSTREAM LOCATION
II. NEW AND EXISTING STORMWATER INLETS AND OUTFALL STRUCTURES SHALL BE PROTECTED DURING CONSTRUCTION. PROTECTION MEASURES SHALL BE EMPLOYED IMMEDIATELY AS REQUIRED DURING THE VARIOUS STAGES OF CONSTRUCTION.
III. PERIMETER EROSION CONTROL DEVICES SHALL REMAIN IN PLACE UNTIL FINAL SITE STABILIZATION HAS BEEN ESTABLISHED

D. CLEARING AND GRUBBING OPERATIONS SHALL BE CONTROLLED SO AS TO MINIMIZE UNPROTECTED ERODIBLE AREAS EXPOSED TO WEATHER. GENERAL EROSION CONTROL BMPS SHALL BE EMPLOYED TO MINIMIZE SOIL EROSION AND OFF-SITE SEDIMENTATION. WHILE THE VARIOUS TECHNIQUES REQUIRED WILL BE SITE AND PLAN SPECIFIC, THEY SHOULD BE EMPLOYED PRIOR TO ANY CONSTRUCTION ACTIVITY.

E. THE CONTRACTOR SHALL FURNISH, INSTALL PER THE SEQUENCE OF CONSTRUCTION, MAINTAIN AND SUBSEQUENTLY REMOVE, ALL NECESSARY TEMPORARY BMPS. THE CONTRACTOR WILL FURNISH AND INSTALL ALL NECESSARY PERMANENT BMPS.

F. THE CONTRACTOR SHALL ADJUST, ADD OR MODIFY BMPS AS NECESSARY TO COMPLY WITH THE INTENT OF THE PLAN FOR NO ADDITIONAL COMPENSATION. THE CONTRACTOR SHALL CONSULT WITH THE CEC PRIOR TO ADJUSTING, ADDING OR MODIFYING BMPS THAT AFFECT THE HYDRAULICS OF THE SITE OR BEFORE ADDING BMPS NOT DETAILED IN THE EROSION AND SEDIMENTATION CONTROL PLAN.

G. THE CONTRACTOR IS ADVISED THAT THE CONTRACT DRAWINGS ONLY INDICATE EROSION, SEDIMENT, AND TURBIDITY CONTROLS AT LOCATIONS DETERMINED IN THE DESIGN PROCESS. HOWEVER, THE CONTRACTOR IS REQUIRED TO PROVIDE ANY ADDITIONAL CONTROLS NECESSARY TO PREVENT THE POSSIBILITY OF SILTING ANY ADJACENT LOWLAND PARCEL OR RECEIVING WATER.

H. EROSION AND SEDIMENT CONTROL MEASURES ARE TO BE PLACED PRIOR TO, OR AS THE FIRST STEP IN CONSTRUCTION. THE CONTRACTOR IS RESPONSIBLE FOR COMPLYING WITH ALL EROSION CONTROL MEASURES SHOWN ON THE PLANS. THE EROSION CONTROL SYSTEM DESCRIBED WITHIN THE CONSTRUCTION DOCUMENTS SHOULD BE CONSIDERED TO REPRESENT THE MINIMUM ACCEPTABLE STANDARDS FOR THIS PROJECT. ADDITIONAL EROSION CONTROL MEASURES MAY BE REQUIRED DEPENDENT UPON THE STAGE OF CONSTRUCTION, THE SEVERITY OF THE RAINFALL EVENT AND/OR AS DEEMED NECESSARY AS A RESULT OF ON-SITE INSPECTIONS BY THE OWNER, THEIR REPRESENTATIVES, OR THE APPLICABLE JURISDICTIONAL AUTHORITIES. THESE ADDITIONAL MEASURES (IF NEEDED) SHALL BE INSTALLED AT NO ADDITIONAL COST TO THE OWNER. IT SHOULD BE NOTED THAT THE MEASURES IDENTIFIED ON THIS PLAN ARE ONLY SUGGESTED BEST MANAGEMENT PRACTICES (BMPS). THE CONTRACTOR SHALL PROVIDE POLLUTION PREVENTION AND EROSION CONTROL MEASURES AS SPECIFIED IN FDOT INDEXES #100 THROUGH #102 AND AS NECESSARY FOR EACH SPECIFIC APPLICATION. IT IS THE CONTRACTOR'S ULTIMATE RESPONSIBILITY TO ASSURE THAT THE STORMWATER DISCHARGE FROM THE SITE DOES NOT EXCEED THE TOLERANCES ESTABLISHED BY ANY OF THE APPLICABLE JURISDICTIONAL AUTHORITIES.

I SEPARATE PERMIT COVERAGE MUST BE OBTAINED BY THE CONTRACTOR UNDER THE DEPARTMENT'S GENERIC PERMIT FOR DISCHARGE OF PRODUCED GROUND WATER FROM ANY NON-CONTAMINATED SITE ACTIVITY PURSUANT TO SUBSECTION 62-621.300(2), F.A.C.

STABILIZATION

A. STABILIZATION MEASURES SHALL BE INITIATED IMMEDIATELY IN PORTIONS OF THE SITE WHERE CONSTRUCTION ACTIVITIES HAVE TEMPORARILY OR PERMANENTLY CEASED AND WILL REMAIN UNDISTURBED FOR 7 DAYS OR MORE. STABILIZE BY COVERING WITH ADEQUATE AMOUNTS OF MULCH OVER SEED AND PERIODICALLY WATER TO PROMOTE AND MAINTAIN GROWTH OF THE TEMPORARY GROUNDCOVER, OR BY THE USE OF AN APPROPRIATE ALTERNATIVE BMP.

B. PERMANENT SOIL EROSION CONTROL MEASURES FOR ALL SLOPES, CHANNELS, DITCHES OR ANY DISTURBED LAND AREAS SHALL BE COMPLETED IMMEDIATELY AFTER FINAL GRADING. WHEN IT IS NOT POSSIBLE TO PERMANENTLY PROTECT A DISTURBED AREA IMMEDIATELY AFTER GRADING OPERATIONS, TEMPORARY EROSION CONTROL MEASURES SHALL BE INSTALLED. ALL TEMPORARY PROTECTION SHALL BE MAINTAINED UNTIL PERMANENT MEASURES ARE IN PLACE AND ESTABLISHED.

C. ALL GRASS SLOPES CONSTRUCTED STEEPER THAN 4H:1V SHALL BE SODDED IMMEDIATELY AFTER FINAL GRADE IS ESTABLISHED.

DUST CONTROL

A. BARE EARTH AREAS SHALL BE WATERED DURING CONSTRUCTION AS NECESSARY TO MINIMIZE THE TRANSPORT OF FUGITIVE DUST. IN NO CASE SHALL FUGITIVE DUST BE ALLOWED TO LEAVE THE SITE UNDER CONSTRUCTION.

B. AS REQUIRED AFTER COMPLETION OF CONSTRUCTION, BARE EARTH AREAS SHALL BE VEGETATED.

C. AT ANY TIME BOTH DURING AND AFTER SITE CONSTRUCTION THAT WATERING AND/OR VEGETATION ARE NOT EFFECTIVE IN CONTROLLING WIND EROSION AND/OR TRANSPORT OF FUGITIVE DUST, OTHER METHODS AS ARE NECESSARY FOR SUCH CONTROL SHALL BE EMPLOYED. THESE METHODS MAY INCLUDE ERECTION OF DUST CONTROL FENCES. IF REQUIRED, DUST CONTROL FENCES SHALL BE CONSTRUCTED IN ACCORDANCE WITH THE DETAIL FOR A SILT FENCE *EXCEPT* THE MINIMUM HEIGHT SHALL BE 4 FEET.

WASTE MANAGEMENT

A. THE CONTRACTOR SHALL ENSURE THAT ALL WASTE AND DEBRIS ARE MANAGED DAILY SUCH THAT THEY WILL NOT IMPACT STORMWATER OR LEAVE THE PERMITTED AREA, AND DISPOSED OF PROPERLY IN ACCORDANCE WITH APPLICABLE STATE, LOCAL AND FEDERAL REGULATIONS.

B. THE CONTRACTOR SHALL ENSURE THAT ALL CHEMICALS, OILS, FUELS, HAZARDOUS WASTE, UNIVERSAL WASTE AND TOXIC SUBSTANCES ARE PROPERLY MANAGED AND DISPOSED OF IN ACCORDANCE WITH APPLICABLE STATE, LOCAL AND FEDERAL REGULATIONS. THE CONTRACTOR SHALL ENSURE THAT WASTE IS NOT DISCHARGED FROM THE SITE, AND DOES NOT IMPACT STORMWATER OR GROUNDWATER.

C. THE CONTRACTOR SHALL PROVIDE APPROPRIATE AND ADEQUATE WASHOUT FACILITIES TO ENSURE THAT CHEMICALS AND WASTE IS NOT DISCHARGED FROM THE SITE, AND DO NOT IMPACT STORMWATER OR GROUNDWATER. (E.G. CONCRETE/MASONRY WASHOUT, PAINT WASHOUT, EIFS, ETC.) THE CONTRACTOR SHALL CLEAN UP SPILLS PROMPTLY AND ENSURE THAT WASHOUT AREAS ARE PROPERLY MAINTAINED TO PROVIDE ADEQUATE VOLUME TO PREVENT OVERFLOW.

D. THE CONTRACTOR SHALL PROVIDE ADEQUATE SANITARY FACILITIES FOR SITE PERSONNEL, MAINTAIN THROUGHOUT CONSTRUCTION, AND PROVIDE FOR PROPER DISPOSAL IN ACCORDANCE WITH APPLICABLE STATE, LOCAL AND FEDERAL REGULATIONS. SANITARY FACILITIES SHALL BE PROPERLY SECURED TO PREVENT TIPPING.

E. WHEN A SPILL OF REPORTABLE QUANTITIES IS DISCOVERED ON THE SITE, THE CONTRACTOR SHALL CLEAN UP ALL SPILLED MATERIALS AND DISPOSE OF IN ACCORDANCE WITH APPLICABLE LAWS AND REGULATIONS. THE CONTRACTOR SHALL NOTIFY THE APPROPRIATE AUTHORITIES IN ACCORDANCE WITH APPLICABLE LAWS AND REGULATIONS, THE OWNER AND PROJECT ENGINEER. THE CONTRACTOR SHALL RETAIN CLEANUP INFORMATION AS WELL AS DISPOSAL MANIFESTS.

MATERIALS MANAGEMENT, AND EQUIPMENT STAGING AND MAINTENANCE

A. EXCAVATED MATERIAL SHALL NOT BE DEPOSITED IN LOCATIONS WHERE IT COULD BE WASHED AWAY BY HIGH WATER OR STORM WATER RUNOFF. STOCKPILED MATERIAL SHALL BE COVERED OR ENCIRCLED WITH SEDIMENT CONTAINMENT DEVICES.

B. HEAVY CONSTRUCTION EQUIPMENT PARKING AND MAINTENANCE AREAS SHALL BE DESIGNED TO PREVENT OIL, GREASE, AND LUBRICANTS FROM ENTERING SITE DRAINAGE FEATURES INCLUDING STORMWATER COLLECTION AND TREATMENT SYSTEMS. CONTRACTORS SHALL PROVIDE BROAD DIKES OR SILT SCREENS AROUND, AND SEDIMENT SUMPS WITHIN, SUCH AREAS AS REQUIRED TO CONTAIN SPILLS OR OIL, GREASE, LUBRICANTS, OR OTHER CONTAMINANTS. CONTRACTOR SHALL HAVE AVAILABLE, AND SHALL USE, ABSORBENT FILTER PADS TO CLEAN UP SPILLS IMMEDIATELY AFTER ANY OCCURRENCE.

C. THE CONTRACTOR SHALL ENSURE THAT ALL TOXIC / HAZARDOUS SUBSTANCES AND CHEMICALS ARE PROPERLY STORED, OUT OF THE WEATHER, AND USED IN ACCORDANCE WITH MANUFACTURER'S RECOMMENDATIONS. THE CONTRACTOR SHALL ENSURE THAT THESE PRODUCTS ARE STORED AND USED IN SUCH A MANNER THAT WILL NOT NEGATIVELY IMPACT STORMWATER, GROUNDWATER OR PROTECTED SPECIES.

D. THE CONTRACTOR SHALL ENSURE THAT ALL MATERIALS, EQUIPMENT, DEBRIS, WASTE, TRAILERS, AND OTHER SUPPORT RELATED ITEMS ARE CONTAINED WITHIN THE PROJECT LIMITS OF DISTURBANCE. THE CONTRACTOR SHALL ENSURE THAT THE STORAGE AND USE OF SUCH ITEMS DOES NOT NEGATIVELY IMPACT STORMWATER OR GROUNDWATER.

OFFSITE VEHICLE TRACKING

A. THE CONTRACTOR SHALL ENSURE THAT THE CONSTRUCTION EXIT IS USED BY ALL VEHICLES AND EQUIPMENT ENTERING OR LEAVING THE JOBSITE. THE CONTRACTOR SHALL MONITOR AND MAINTAIN THE CONSTRUCTION EXIT TO ENSURE THAT NO SOILS ARE TRACKED OFFSITE BY TIRES OR TRACKS, AND THAT NO SOILS ARE SPILLED BY TRUCKS OR EQUIPMENT LEAVING THE SITE. ALL TRACKED OR SPILLED SOILS SHALL BE SHOVELED OR SWEPT FROM THE ROADWAY AND RETURNED TO THE SITE. WATER SHALL NOT BE USED TO CLEAN THE SOILS FROM THE ROADWAY UNLESS THE WATER AND SOILS ARE RECOVERED BY THE USE OF A VACUUM TRUCK OR SIMILAR DEVICE.

FERTILIZERS, HERBICIDES AND PESTICIDES

A. THE CONTRACTOR SHALL ENSURE THAT ALL FERTILIZERS, HERBICIDES, PESTICIDES AND SIMILAR PRODUCTS ARE PROPERLY STORED, OUT OF THE WEATHER, AND APPLIED IN ACCORDANCE WITH MANUFACTURER'S RECOMMENDATIONS. THE CONTRACTOR SHALL ENSURE THAT THESE PRODUCTS ARE USED IN SUCH A MANNER THAT WILL NOT NEGATIVELY IMPACT STORMWATER, GROUNDWATER OR PROTECTED SPECIES.

B. NUTRIENTS SHALL BE APPLIED ONLY AT RATES NECESSARY TO ESTABLISH AND MAINTAIN VEGETATION.

INSPECTIONS AND MAINTENANCE

A. THE CONTRACTOR SHALL INSPECT BMPS (I.E. DISCHARGE LOCATIONS, CONSTRUCTION EXIT, PERIMETER CONTROLS, INLET PROTECTION, STABILIZATION, EROSION CONTROL, DOCUMENTATION, WASTE DISPOSAL AREAS, MATERIAL STORAGE AREAS, ETC.) TO DETERMINE IF CONSTRUCTION ACTIVITIES HAVE ALTERED THE EFFECTIVENESS BMPS, CONFIRM BMPS ARE ACHIEVING COMPLIANCE, AND MAINTAIN BMPS AT LEAST ONCE EVERY SEVEN (7) CALENDAR DAYS, AND WITHIN 24 HOURS AFTER A RAINSTORM OF 0.50 INCHES OR GREATER.

B. ANY MAINTENANCE, REPAIR AND NECESSARY REVISIONS TO BMP ITEMS SHALL BE ADDRESSED IN A TIMELY MANNER, BUT IN NO CASE LATER THAN 7 CALENDAR DAYS FOLLOWING THE INSPECTIONOR IDENTIFICATION OF THE ISSUE. UNLESS OTHERWISE SPECIFIED, ACCUMULATED SEDIMENTS SHOULD BE REMOVED BEFORE THEY REACH ONE-HALF OF THE CAPACITY OF THE CONTROL DEVICE.

REFERENCES

THE CONSTRUCTION PLANS AND SPECIFICATIONS FOR JOB #M29907.MRP AS PREPARED BY CPH, INC. ON MARCH, 2016 ARE HEREBY REFERENCED AND MADE A PART OF THIS PLAN.

GENERAL GRADING NOTES

1. PRIOR TO ANY DEMOLITION OR CONSTRUCTION ACTIVITY THE CONTRACTOR SHALL INSTALL EROSION AND SEDIMENTATION CONTROL MEASURES SHOWN ON THE PLANS. AS CONSTRUCTION PROGRESSES, THE CONTRACTOR SHALL PERIODICALLY CHECK THE SEDIMENTATION CONTROLS AND REPAIR THEM AS NECESSARY TO KEEP THEM IN GOOD FUNCTIONING ORDER. THE CONTRACTOR SHALL ALSO PROTECT INLETS AND OTHER SITE APPURTENANCES FROM SEDIMENTATION USING PROTECTION AS DETAILED IN THE PLANS.
2. THE CONTRACTOR SHALL CONDUCT GROUND STABILIZING MEASURES (PAVING, GRASSING, MULCHING AND SODDING) AS SOON AS PRACTICABLE FOLLOWING FINAL GRADING OF THE SITE.
3. FOLLOWING COMPLETION OF CONSTRUCTION AND COMPLETED STABILIZATION OF POTENTIAL EROSION AREAS, THE CONTRACTOR SHALL REMOVE SEDIMENTATION CONTROL MEASURES AND CLEAN AND REPAIR ANY AREAS AFFECTED BY THE CONSTRUCTION ACTIVITIES. ANY SILTATION IN THE STORMWATER SYSTEM SHALL BE COMPLETELY FLUSHED PRIOR TO CERTIFICATION OF COMPLETION.
4. ALL WORK PERFORMED WITHIN ANY ADJACENT ROAD REQUIRES A SEPARATE PERMIT ISSUED BY THE PALM BEACH COUNTY OR CITY OF DELRAY BEACH PUBLIC WORKS DEPARTMENTS.
5. HAVING CONSULTED THE NATIONAL FLOOD INSURANCE PROGRAM, FLOOD INSURANCE RATE MAP (FIRM) COMMUNITY PANEL NO. 125102-0006-D, CITY OF DELRAY BEACH, FLORIDA WITH EFFECTIVE DATE JANUARY 5, 1989, THE SUBJECT PROPERTY APPEARS TO LIE IN ZONE X (SHADED), WHICH ARE AREAS OF 500-YEAR FLOOD AND ALSO LIES IN ZONE AE (EL 12) WHICH ARE AREAS OF 100 YEAR FLOOD WITH BASE FLOOD ELEVATION DETERMINED AS 12.00 FEET (NGVD '29) 10.454 FEET (NAVD '88). THIS DETERMINATION WAS BASED ON A GRAPHIC INTERPOLATION OF SAID MAP AND NOT ON ACTUAL FIELD MEASUREMENTS.
6. CONTRACTOR SHALL FIELD VERIFY EXISTING AND SURROUNDING DEVELOPMENT GRADES AND CONTACT ENGINEER IF ANY DISCREPANCIES EXIST PRIOR TO CONSTRUCTION.
7. CONTRACTOR SHALL VERIFY POSITIVE DRAINAGE FLOW AWAY FROM BLDG. AND THAT A MINIMUM SLOPE OF AT LEAST 1: IN THE DIRECTION OF DRAINAGE FLOW INDICATED CAN BE ACHIEVED.
8. CONTRACTOR SHALL CLEAN OUT ALL STORM STRUCTURES AND PIPES PRIOR TO PROJECT CLOSE OUT.

SEQUENCE OF CONSTRUCTION

THE CONTRACTOR SHALL FOLLOW THE SEQUENCE OF CONSTRUCTION AS DESCRIBED BELOW. IF THE CONTRACTOR FINDS THAT THE SEQUENCE NEEDS TO BE MODIFIED, THE CONTRACTOR SHALL CONTACT THE CEC FOR FURTHER DIRECTION. THE CONTRACTOR SHALL DISTURB ONLY THOSE AREAS NECESSARY TO INSTALL THE BMPS UNTIL DIRECTED IN THE SEQUENCE TO BEGIN CLEARING AND GRUBBING OPERATIONS. ALL TEMPORARY BMPS SHALL BE REPAIRED AND MAINTAINED UNTIL STABILIZATION HAS OCCURRED AND THERE IS NO RISK OF DISCHARGE, THEN THEY SHALL BE REMOVED.

1. INSTALL PERIMETER CONTROLS IMMEDIATELY DOWNSTREAM OF THE PLANNED LOCATION OF THE CONSTRUCTION EXIT.
2. INSTALL REMAINING PERIMETER CONTROLS.
3. INSTALL TEMPORARY PARKING AND STORAGE AREAS (TRAILER, PARKING, LAY DOWN, SANITARY FACILITIES, WHEEL WASH, CONCRETE WASHOUT, MASONS AREA, FUEL AND MATERIAL STORAGE CONTAINERS, SOLID WASTE CONTAINERS, ETC).
4. BEGIN DEMOLITION, CLEARING AND GRUBBING OPERATIONS AS APPLICABLE.
5. TEMPORARILY SEED, IMMEDIATELY AND THROUGHOUT CONSTRUCTION, DENUDED AREAS THAT WILL BE INACTIVE FOR 7 DAYS OR MORE.
6. PERMANENTLY STABILIZE AREAS TO BE VEGETATED AS THEY ARE BROUGHT TO FINAL GRADE.
7. PREPARE SITE FOR PAVING.
8. PAVE SITE.
9. INSTALL APPROPRIATE INLET PROTECTION DEVICES FOR PAVED AREAS AS WORK PROGRESSES.
10. COMPLETE GRADING AND INSTALL PERMANENT STABILIZATION OVER ALL AREAS.
11. REMOVE ALL TEMPORARY EROSION AND SEDIMENT CONTROL DEVICES (ONLY IF SITE IS STABILIZED).

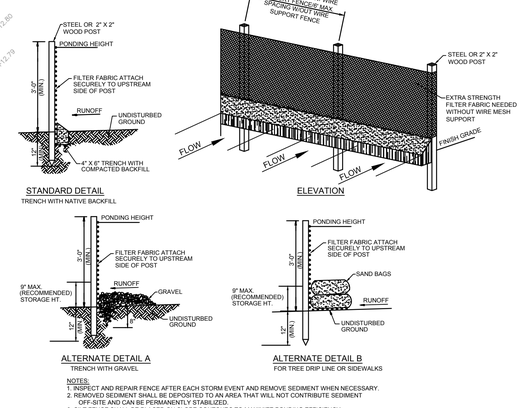

SEDIMENTATION / SILT FENCE

N.T.S.

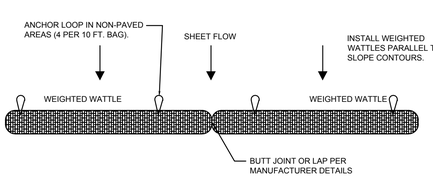

WEIGHTED WATTLE DETAIL

N.T.S.

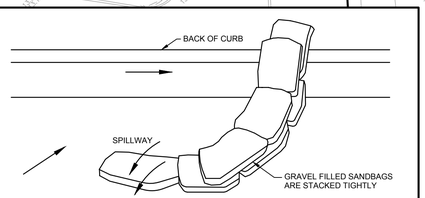

NOTES:
1. PLACE CURB TYPE SEDIMENT BARRIERS ON GENTLY SLOPING STREET SEGMENTS WHERE WATER CAN POND AND ALLOW SEDIMENT TO SEPARATE FROM RUNOFF.
2. SANDBAGS OF EITHER BURLAP OR WOVEN GEOTEXTILE FABRIC, ARE FILLED WITH GRAVEL, LAYERED AND PACKED TIGHTLY.
3. TAPER TO ONE SANDBAG TO PROVIDE A SPILLWAY FOR OVERFLOW.
4. INSPECT BARRIERS AND REMOVE SEDIMENT AS NECESSARY. SEDIMENT AND GRAVEL MUST BE REMOVED FROM THE TRAVELED WAY IMMEDIATELY.

CURB LINE PROTECTION DETAIL

N.T.S.

NOTE:
CONTRACTOR SHALL PAY CLOSE ATTENTION WHEN CLEARING AND/OR GRADING THE SITE TO ENSURE THAT WHEN EXISTING ROOTS ARE ENCOUNTERED THEY ARE CUT OFF EVENLY WITH CLEAN SHARP PRUNING TOOLS. CONTRACTOR SHALL BE RESPONSIBLE FOR MINIMIZING THE DAMAGE OF THE EXISTING ROOT SYSTEMS.

ACREAGE SUMMARY

TOTAL SITE AREA	1.44 AC.
ON-SITE DISTURBED AREA	0.33 AC.
OFF-SITE DISTURBED AREA	0.00 AC.
TOTAL DISTURBED AREA	0.33 AC.

Always call 811 two full business days before you dig.
Sunshine811.com
www.sunshine811.com

McDONALD'S PROJECT CODE: 009-1060

cph
www.cphcorp.com
A Full Service A & E Firm
Architects
Engineers
Environmental
Landscape Architects
M / E / P
Planners
Structural
Surveyors
Traffic / Transportation
Offices in:
• Florida
• Puerto Rico
• Connecticut
• Maryland

No.	Date	Revision	By
1	01/24/17	Per City Comments	JDL
2	10/24/16	Per City Comments	JDL

Designed by:	CDP
Drawn by:	JDH
Chec ed by:	RMM
Approved by:	JDL
Scale:	AS SHOWN
Date:	Mar. 2016
Job No.:	M29907.MRP

© 2017

Plans Prepared By:
CPH, Inc.
1992 SW 1st. St.
Miami, FL 33135
Ph: 305.274.4805
Licenses:
Eng. C.O.A. No. 3215
Survey L.B. No. 7143
Arch. Lic. No. AA26000926
Lndscp. Lic. No. LC0000298

GRADING AND EROSION AND SEDIMENTATION CONTROL PLAN

McDonald's®

LINTON MRP
CITY OF DELRAY BEACH / FLORIDA

Sheet No.
C-4

J:\M29907.MRP\Civil\DWG\Design\4 - M29907.MRP - SGP & ECP.dwg Jan 24, 2017 - 8:46am jmorales

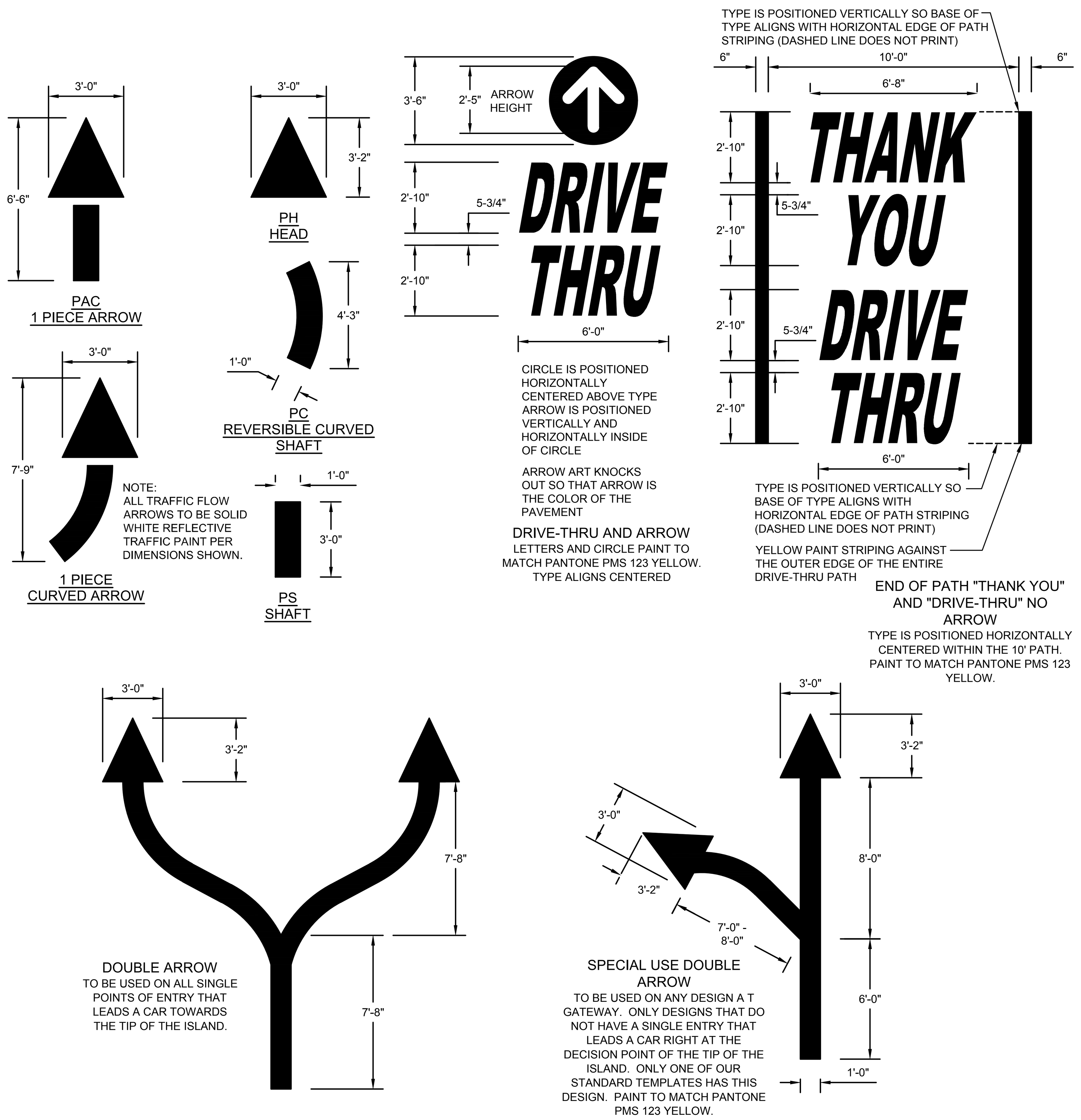

TYPICAL PAVEMENT MARKINGS

N.T.S.

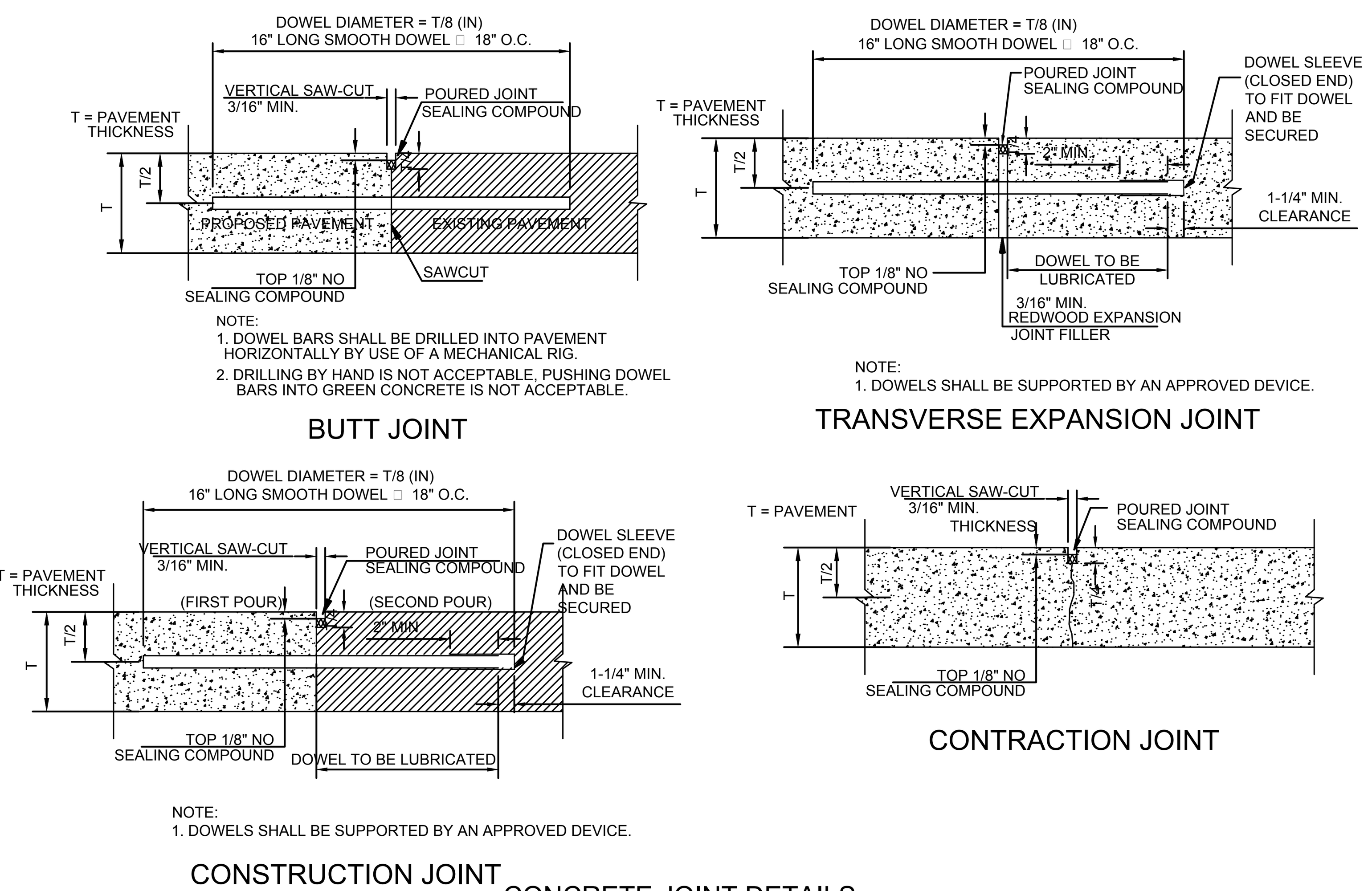

CONCRETE JOINT DETAILS

N.T.S.

DIMENSION & TYPE

	A	B	C
Drive Aisle	2"	6"	12"
Par□ing	2"	6"	12"

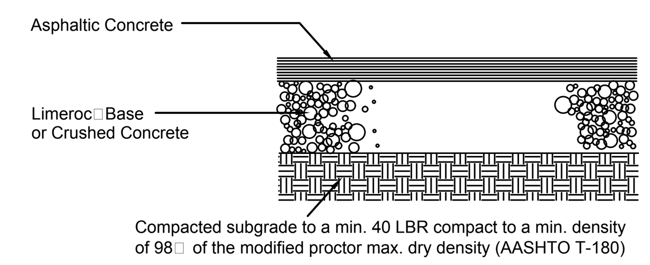

ASPHALT PAVING SECTION

N.T.S.

DIMENSION & TYPE

	C	D	
Concrete Section	C	D	
Loading/Dumpster	12"	6"	
Drive-thru	12"	6"	

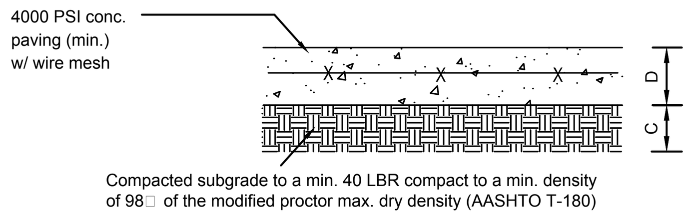

CONCRETE PAVING SECTION

N.T.S.

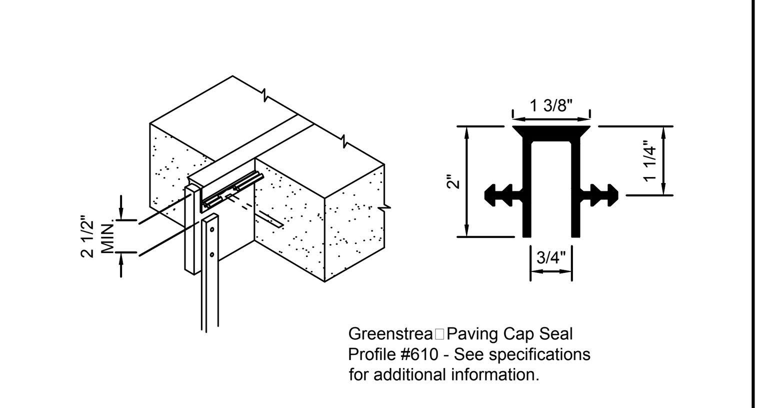

TYPICAL EXPANSION JOINT

N.T.S.

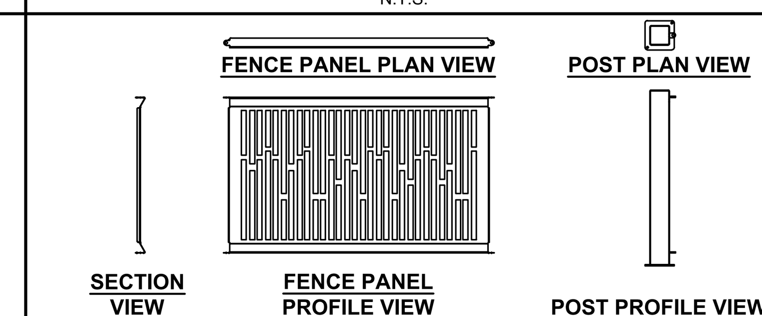

WAUSAU TILE ALUMINUM FENCE PANEL McDONALD'S PATTERN

Size: 55" x 1" x 32" high
Weight: 45 Lbs.
Material: Powder coated aluminum
Powder Coating Colors:
Sil□Gray - RAL7044; Beige Gray - RAL7006;
Bronze; Blac□

ALUMINUM RAILING DETAIL

N.T.S.

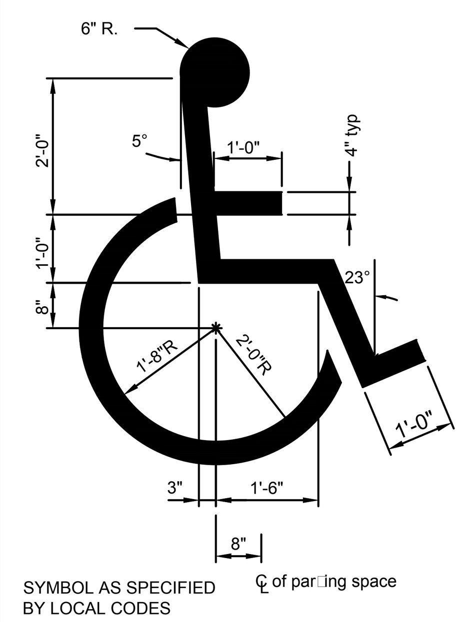

ACCESSIBLE SYMBOL

N.T.S.

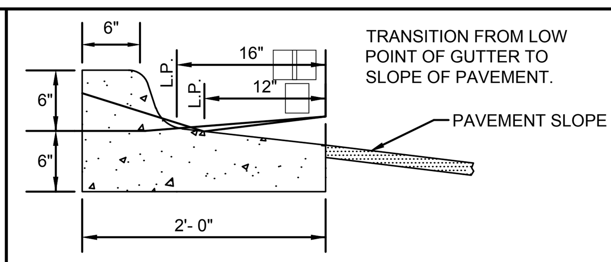

FOR LOW POINT OF MIAMI CURB.
FOR LOW POINT OF TYPE F CURB & GUTTER

SPILL TYPE CURB & GUTTER AT SLOPE OF PAVEMENT

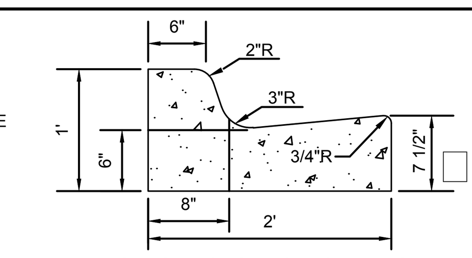

WHEN USED ON HIGH SIDE OF ROADWAYS, THE CROSS SLOPE OF THE GUTTER SHALL MATCH THE CROSS SLOPE OF THE ADJACENT PAVEMENT. THE THICKNESS OF THE LIP SHALL BE 6", UNLESS OTHERWISE SHOWN ON PLANS.

STANDARD CONCRETE CURB & GUTTER

GENERAL NOTES:
1. THE CONCRETE FOR CURBS SHALL BE DEPARTMENT OF TRANSPORTATION CLASS "I" CONCRETE, AND HAVE A COMPRESSIVE STRENGTH OF 3,000 PSI.
2. ALL CURBS SHALL HAVE CONTRACTION JOINTS AND SHALL BE CONSTRUCTED AT INTERVALS NOT TO EXCEED 10'- 0" ON CENTERS FOR ALL CURBS.

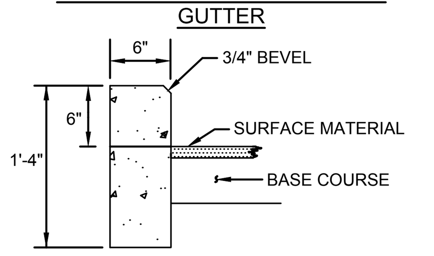

ONLY VERTICAL CURB ONLY

CONCRETE CURB AND GUTTER DETAILS

N.T.S.

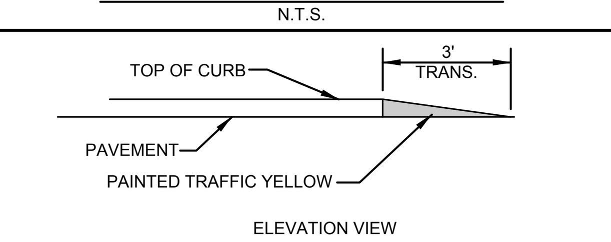

NOSE DOWN CURB DETAIL

N.T.S.

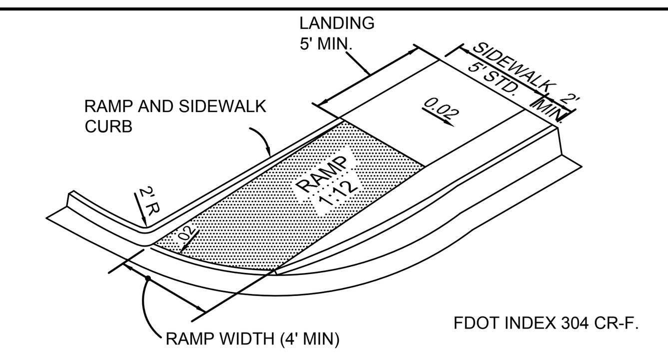

SIDEWALK RAMP TYPE B

N.T.S.

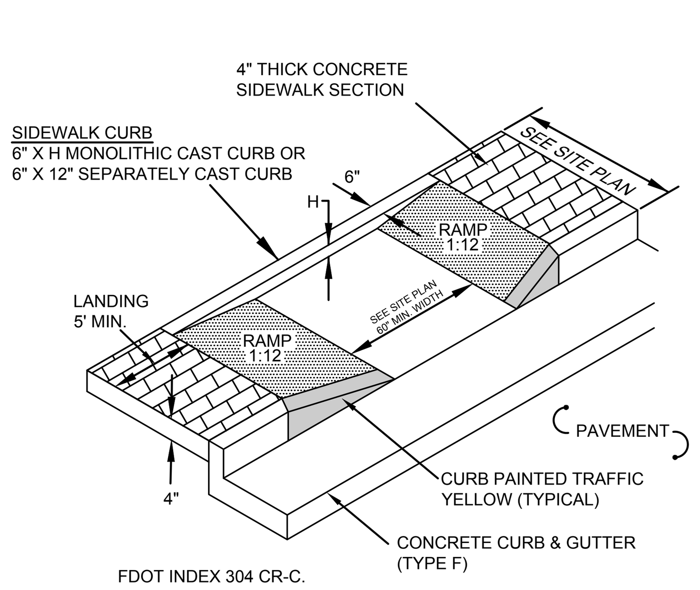

SIDEWALK RAMP TYPE A

N.T.S.

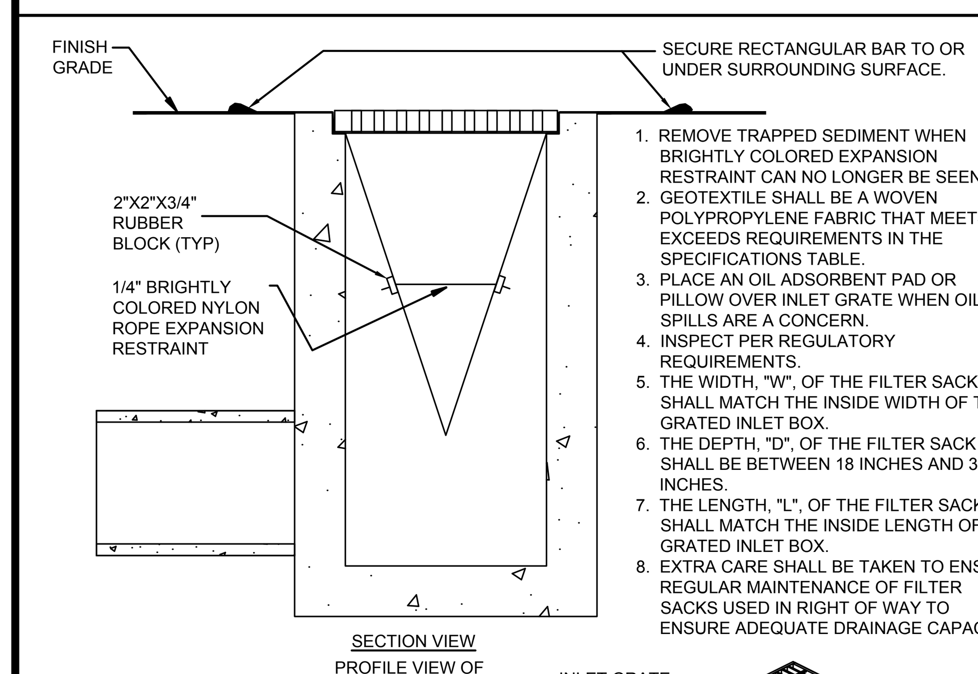

1. REMOVE TRAPPED SEDIMENT WHEN BRIGHTLY COLORED EXPANSION RESTRAINT CAN NO LONGER BE SEEN.
2. GEOTEXTILE SHALL BE A WOVEN POLYPROPYLENE FABRIC THAT MEETS OR EXCEEDS REQUIREMENTS IN THE SPECIFICATIONS TABLE.
3. PLACE AN OIL ADSORBENT PAD OR PILLOW OVER INLET GRATE WHEN OIL SPILLS ARE A CONCERN.
4. INSPECT PER REGULATORY REQUIREMENTS.
5. THE WIDTH, "W", OF THE FILTER SACK SHALL MATCH THE INSIDE WIDTH OF THE GRATED INLET BOX.
6. THE DEPTH, "D", OF THE FILTER SACK SHALL BE BETWEEN 18 INCHES AND 36 INCHES.
7. THE LENGTH, "L", OF THE FILTER SACK SHALL MATCH THE INSIDE LENGTH OF THE GRATED INLET BOX.
8. EXTRA CARE SHALL BE TAKEN TO ENSURE REGULAR MAINTENANCE OF FILTER SACKS USED IN RIGHT OF WAY TO ENSURE ADEQUATE DRAINAGE CAPACITY.

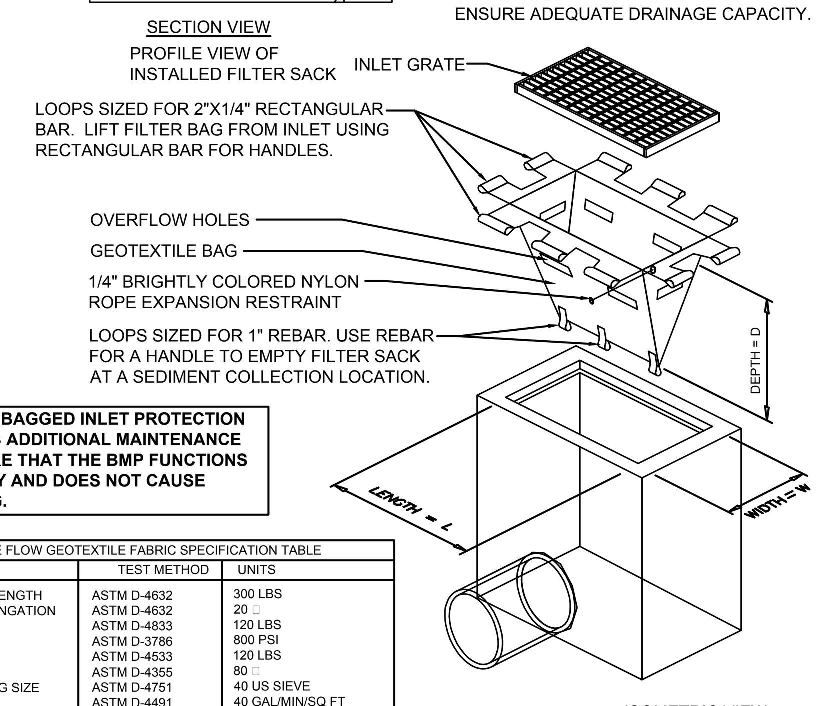

CAUTION: BAGGED INLET PROTECTION REQUIRES ADDITIONAL MAINTENANCE TO ENSURE THAT THE BMP FUNCTIONS PROPERLY AND DOES NOT CAUSE FLOODING.

LOW TO MODERATE FLOW GEOTEXTILE FABRIC SPECIFICATION TABLE

PROPERTIES	TEST METHOD	UNITS
GRAB TENSILE STRENGTH	ASTM D-4632	300 LBS
GRAB TENSILE ELONGATION	ASTM D-4632	20 □
PUNCTURE	ASTM D-4833	120 LBS
MULLEN BURST	ASTM D-3786	800 PSI
TRAPEZOID TEAR	ASTM D-4533	120 LBS
UV RESISTANCE	ASTM D-4355	80 □
APPARENT OPENING SIZE	ASTM D-4751	40 US SIEVE
FLOW RATE	ASTM D-4491	40 GAL/MIN/SQ FT
PERMITTIVITY	ASTM D-4491	0.55 SEC -1

MODERATE TO HIGH FLOW GEOTEXTILE FABRIC SPECIFICATION TABLE

PROPERTIES	TEST METHOD	UNITS
GRAB TENSILE STRENGTH	ASTM D-4632	265 LBS
GRAB TENSILE ELONGATION	ASTM D-4632	20 □
PUNCTURE	ASTM D-4833	135 LBS
MULLEN BURST	ASTM D-3786	420 PSI
TRAPEZOID TEAR	ASTM D-4533	45 LBS
UV RESISTANCE	ASTM D-4355	90 □
APPARENT OPENING SIZE	ASTM D-4751	20 US SIEVE
FLOW RATE	ASTM D-4491	200 GAL/MIN/SQ FT
PERMITTIVITY	ASTM D-4491	1.5 SEC -1

GEOTEXTILE BAG INLET PROTECTION DETAIL

N.T.S.

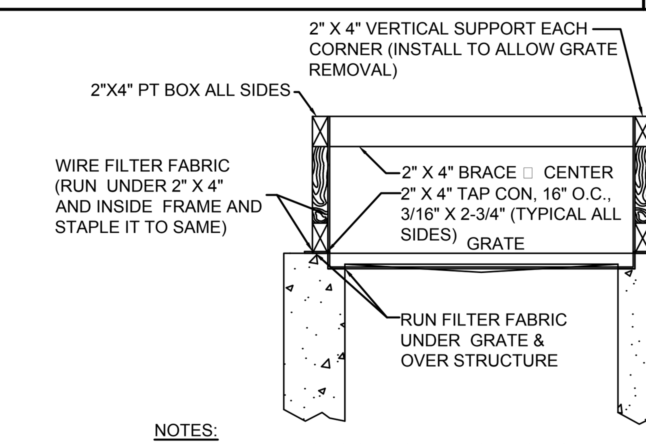

NOTES:
1. FASTEN FRAMING TO STRUCTURE TO ALLOW GRATE REMOVAL.
2. LEAVE EXPOSED EDGE TO ALLOW FOR PAVING TO GRADE.

INLET PROTECTION DETAIL

N.T.S.

MENU BOARD NOTE:

MENU BOARD TO CONFORM TO DELRAY BEACH COUNTY LAND DEVELOPMENT CODE

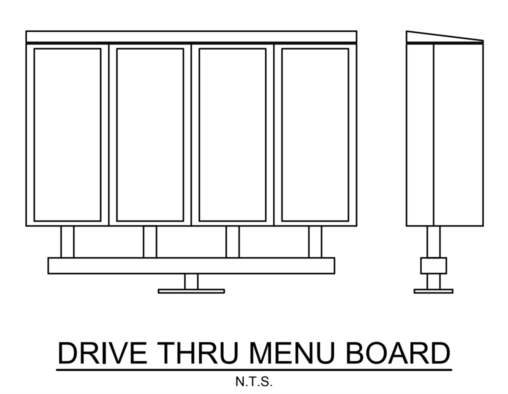

DRIVE THRU MENU BOARD

N.T.S.

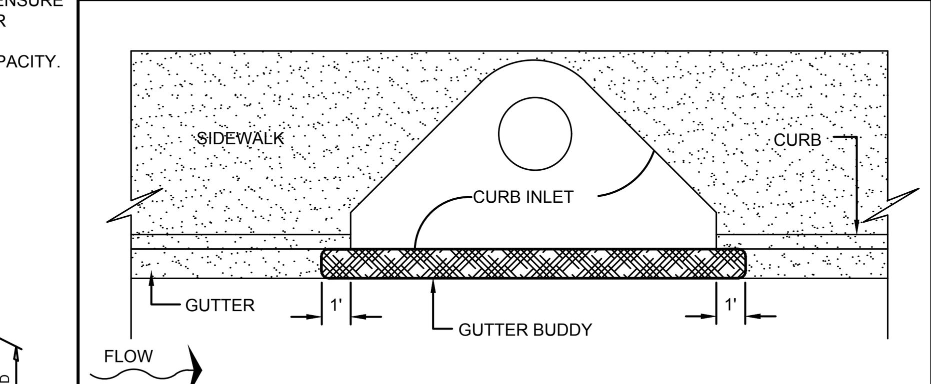

CURB INLET PROTECTION DETAIL

N.T.S.

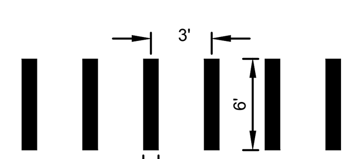

NOTE:
STRIPING TO BE SOLID WHITE.

CROSS WALK STRIPING DETAIL

N.T.S.

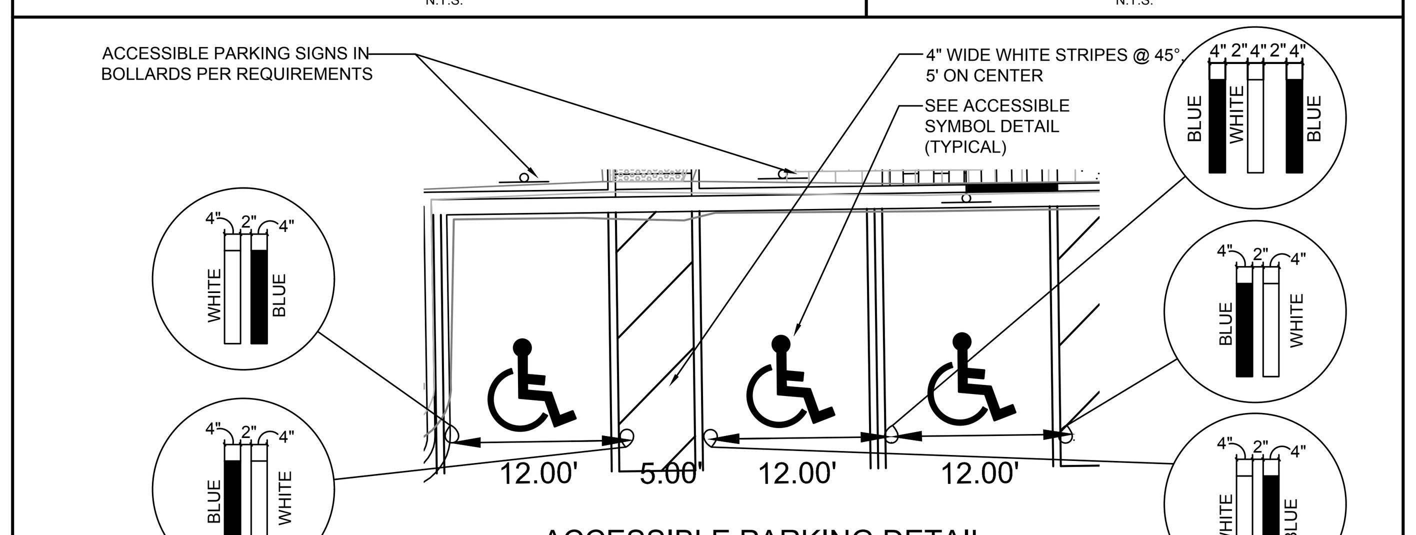

ACCESSIBLE PARKING DETAIL

1" = 10'

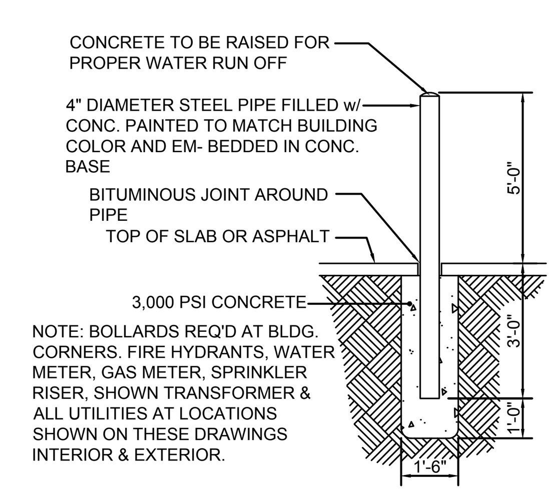

NOTE: BOLLARDS REQ'D AT BLDG. CORNERS. FIRE HYDRANTS, WATER METER, GAS METER, SPRINKLER RISER, SHOWN TRANSFORMER & ALL UTILITIES AT LOCATIONS SHOWN ON THESE DRAWINGS INTERIOR & EXTERIOR.

BOLLARD DETAIL

N.T.S.

R5-1
30" X 30"
STANDARD RED AND WHITE SIGN

DO NOT ENTER SIGN

N.T.S.

R3-5L
30" X 36"

LEFT TURN ONLY

N.T.S.

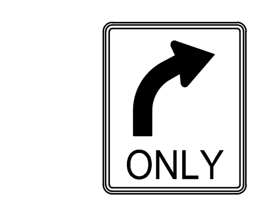

R3-5R
30" X 36"

RIGHT TURN ONLY

N.T.S.

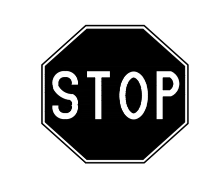

R1-1
30" X 30"

STOP SIGN

N.T.S.

R3-2
24" X 24"

NO LEFT TURN

N.T.S.

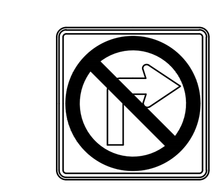

R3-1
24" X 24"

NO RIGHT TURN

N.T.S.

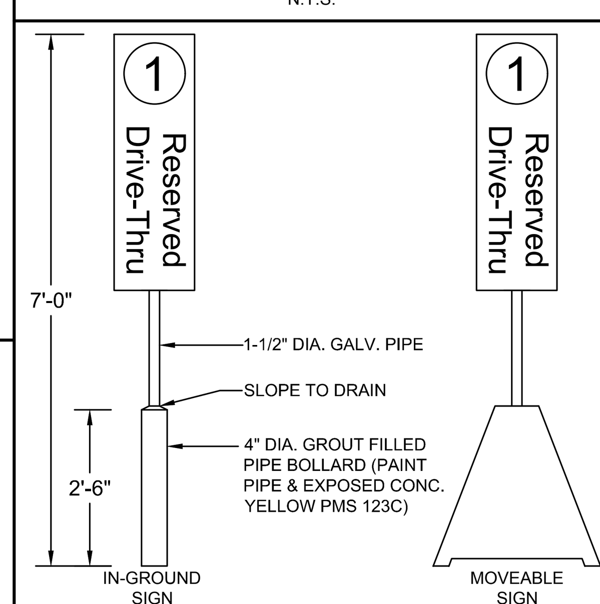

PULL FORWARD SIGNS ARE ONLY TO BE ORDERED THROUGH McDONALD'S APPROVED SIGNAGE VENDORS.

RECOMMENDATION IS TO USE PERMANENT IN-GROUND BASE AS FIRST CHOICE WHENEVER POSSIBLE. THE BASE OF THE SIGN HAS TO BE POSITIONED FREE AND CLEAR OF ANY ACCESSIBLE RAMPS AND NOT CREATE A BARRIER IN ALLOWING PROPER ADA CLEARANCES FOR CUSTOMER ACCESS TO THE BUILDING. COORDINATE ALL REQUIRED IN-GROUND INSTALLATION WORK WITH QUALIFIED GC. STANDARD INSTALLATION DETAILS WILL BE PROVIDED BY SIGNAGE VENDORS FOR REFERENCE.

DRIVE-THRU PARKING SIGN

N.T.S.

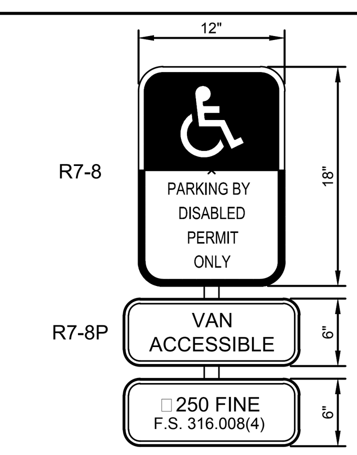

SIGNS USED AS PER FLORIDA STATUTES
FTP 25 PER FS 316.1955, FS 316.1957

1. ALL LETTERS ARE 1" SERIES "C" PER MUTCD
2. TOP PORTION OF SIGN SHALL HAVE REFLECTORIZED (ENGINEERING GRADE) BLUE BACKGROUND WITH WHITE REFLECTORIZED LEGEND & BORDER.
3. BOTTOM PORTION OF SIGN SHALL HAVE A REFLECTORIZED (ENGINEERING GRADE) WHITE BACKGROUND WITH BLACK OPAQUE LEGEND & BORDER
4. FINE NOTIFICATION SIGN SHALL HAVE A REFLECTORIZED (ENGINEERING GRADE) WHITE BACKGROUND WITH BLACK OPAQUE LEGEND & BORDER
5. ONE (1) SIGN REQUIRED FOR EACH PARKING SPACE.
6. INSTALLATION HEIGHT OF LOWEST SIGN SHALL HAVE A MINIMUM OF 7'-0" CLEARANCE TO FINISH GRADE

ACCESSIBLE PARKING SIGN

N.T.S.

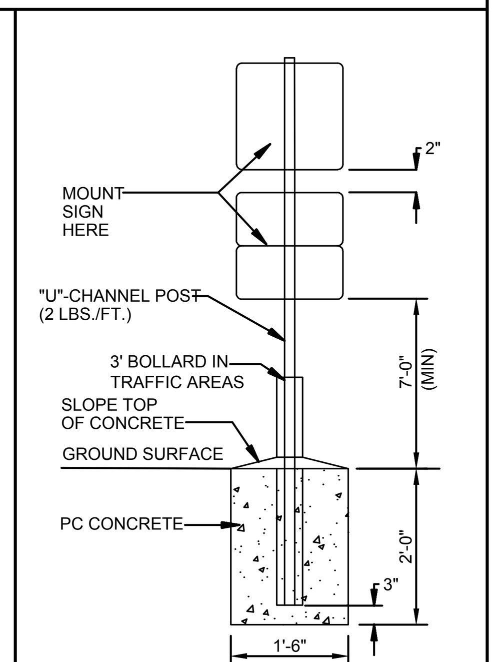

NOTE:
ALL SIGNS SHALL COMPLY WITH U.S. DEPARTMENT OF TRANSPORTATION, FEDERAL HIGHWAY ADMINISTRATION'S "MANUAL ON UNIFORM TRAFFIC CONTROL DEVICES", LOCAL CODES AND AS SPECIFIED. MOUNT SIGNS TO POST IN ACCORDANCE WITH MANUFACTURER'S INSTRUCTIONS.

STANDARD SIGN BASE

N.T.S.

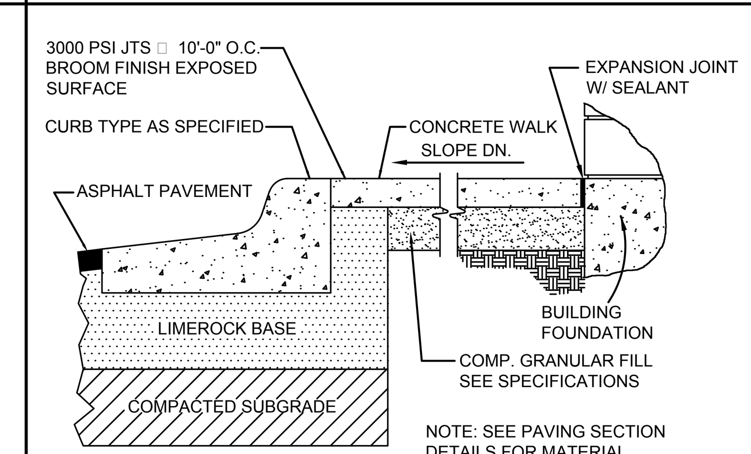

NOTE: SEE PAVING SECTION DETAILS FOR MATERIAL SPECIFICATIONS.

TYPICAL WALK SECTION

N.T.S.

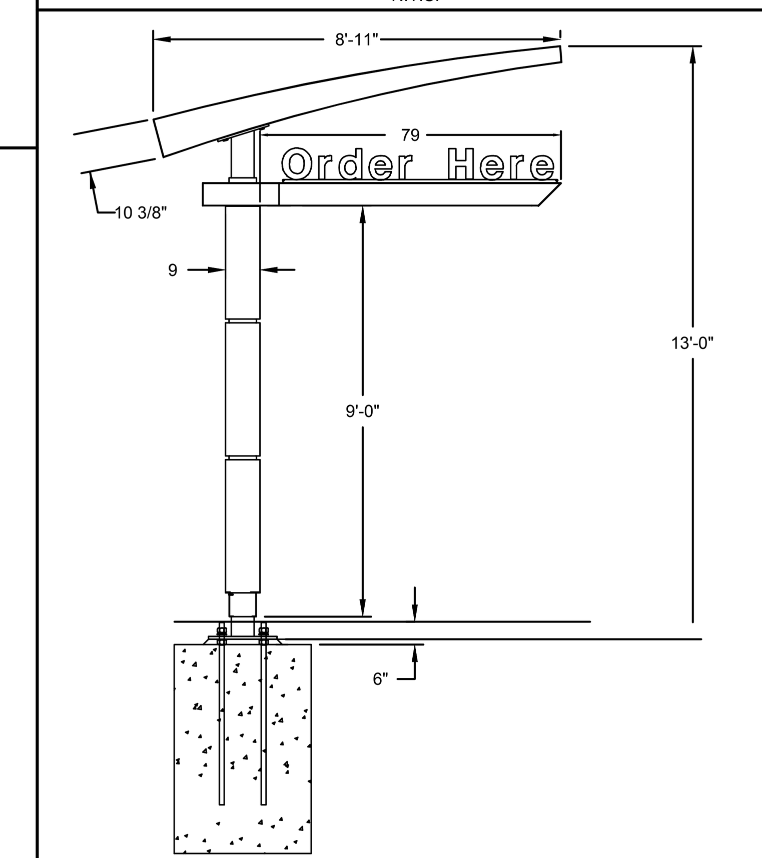

RIGID DRIVE-THRU CANOPY W/ CUSTOMER ORDER DISPLAY (COD) 9FT. CLEARANCE

N.T.S.

McDONALD'S PROJECT CODE: 009-1060

www.cphcorp.com

A Full Service A & E Firm

Architects
Engineers
Environmental
Landscape Architects
M / E / P
Planners
Structural
Surveyors
Traffic / Transportation

Offices in:
- **Florida**
- **Puerto Rico**
- **Connecticut**
- **Maryland**

JOSHUA D. LOCKHART ★ LICENSE No. 74011 ★ STATE OF FLORIDA ★ PROFESSIONAL ENGINEER

JOSHUA D. LOCKHART, P.E. 74011

No.	Date	Revision	By
1	10/24/16	Per City Comments	JDL
2	01/24/17	Per City Comments	JDL
3			
4			
5			
6			
7			

Designed by:	JDH
Drawn by:	JDH
Chec□ed by:	RMM
Approved by:	JMM
Scale:	AS SHOWN
Date:	Mar. 2016
Job No.:	M29907.MRP
© 2017	

Plans Prepared By:
CPH, Inc.
1992 SW 1st. St.
Miami, FL 33135
Ph: 305.274.4805
Licenses:
Eng. C.O.A. No. 3215
Survey L.B. No. 7143
Arch. Lic. No. AA2600926
Lndscp. Lic. No. LC0000298

GENERAL DETAILS

McDonald's®

LINTON MRP
CITY OF DELRAY BEACH / FLORIDA

Sheet No.

C-5

J:\M29907.MRP\Civil\DWG\Design\5 - M29907.MRP - GEN DET.dwg Jan 24, 2017 - 8:55am jmorales

LANDSCAPE NOTES:

1. The landscape Contractor shall be responsible for all materials and all work as called for on the Landscape Plans and in the Landscape Specifications. In the event of variation between quantities shown on plant list and the plans, the plans shall control. The Landscape Contractor shall verify all quantities and report any discrepancies at the time of bidding.
2. The Landscape Contractor shall review architectural/engineering plans and become thoroughly familiar with surface and subsurface utilities.
3. Prior to construction, the contractor shall be responsible for locating all underground utilities and shall avoid damage to all utilities during the course of the work. Locations of existing buried utility lines shown on the plans are based upon best available information and are considered to be approximate. It shall be the responsibility of the contractor 1) to verify the locations of utility lines within and adjacent to the work area 2) to protect all utility lines during the construction period 3) to repair any and all damage to utilities, structures, site appurtenances, etc. which occurs as a result of the construction 4) To field adjust the location of proposed trees and palms 10' off the center of the utility lines. Notify the Landscape Architect if a 10' offset does not function.
4. The work shall be coordinated with other trades to prevent conflicts. Coordinate the planting with the irrigation work to assure availability and proper location of irrigation items and plants.
5. Contractor shall ensure that there are no visual obstructions to vehicle lines of sight and traffic controls. Contractor shall field adjust tree and/or large shrub locations to avoid any such obstructions.
6. Trees shall be maintained by the owner to avoid future such obstructions by pruning trees and/or shrubs as necessary utilizing horticulturally sound techniques.
7. All planting shall be performed by personnel familiar with planting procedure and under the supervision of a qualified planting foreman.
8. All plant material shall be graded Florida No. 1 or better as outlined under Grades and Standards for Nursery Stock, Part I and II, published by the Florida Department of Agriculture and Consumer Services.
9. The Landscape Architect or Owner shall have the right, at any stage of the operations, to reject any and all work and materials which, in his opinion, do not meet with the requirements of these specifications.
10. Except as otherwise specified, the Landscape Contractor's work shall conform to accepted horticultural practices as used in the trade.
11. The minimum acceptable size of all plants, measured after pruning, with branches in normal positions, shall conform to the measurements specified on the plant list or as indicated on the landscape drawing. Height and spread dimensions refer to main body of the plant and not extreme branch tip to tip. Trunk caliper (trunk diameter) is measured 6 inches from the ground on trees up to and including 4 inches in caliper, and 12 inches from the ground for larger trees. Since trunks are seldom round, the average of the largest diameter and that perpendicular to it is referred to as caliper.
12. Plants shall be protected upon arrival at the site, by being thoroughly watered and properly maintained until planted.
13. All tree pits shall be excavated to size and depth in accordance with the Florida Grades & Standards for Nursery Stock, unless shown otherwise on the drawings, and backfilled with the specified planting soil. The Landscape Contractor shall test fill all tree pits with water before planting to assure proper drainage percolation is available.
14. The Landscape Contractor shall be responsible for proper watering of all plants. All plants shall be thoroughly watered at time of planting and kept adequately watered until time of acceptance. It shall be the Landscape Contractor's responsibility to assure that plants are not over watered.
15. It shall be the Landscape Contractor's responsibility to prevent plants from falling or being blown over, to re-straighten and replant all plants which lean or fall and to replace all plants which are damaged due to lack of proper guying or staking. The Landscape Contractor shall be legally liable for any damage caused by instability of any plant material.
16. All Palms to be staked as indicated per Palm staking details. All other trees to be stabilized utilizing 8' lodge poles per tree planting details.
17. Plants blown over by high winds, within the guaranteed period, shall not be cause for additional expense to the Owner, but shall be the responsibility of the Landscape Contractor. Damaged plants shall be replaced by the Landscape Contractor at no additional cost to the Owner.
18. Sod shall be of a species specified on the drawings and originate from a commercial turf grower. It shall be a dense stand of live turf, reasonably free of weeds, well matted with grass roots in rectangles 12 inch by 24 inch or in 12 inch wide rolls in a length consistent with the equipment and methods used to handle the rolls and place the sod. Any netting contained within the sod shall be certified by the manufacturer to be bio-degradable. The soil and root mat shall be a minimum of 1-1/2 inch thick and must hold together during placement. Sod shall be place adjacent to one another to avoid gaps and overlaps. Joints shall be staggered between the rows. Sod placed on slopes exceeding 3:1 shall be pinned with turf staples. Sod turf, shall have been mowed a minimum of one week prior to cutting and delivery, so that the length of the turf is no longer than 4 inches at time of delivery. Place sod within 48 hours of cutting the sod. The sod shall be kept moist throughout the 48 hour period to maintain the health and viability of the sod. Submit a letter of certification to the Owner's CEI Representative, at time of delivery, as to the source of the sod, the time it was cut, the species and cultivar provided, last mowing date, and that the sod is free of fire ants. Sod which has been cut for longer than 48 hours after being cut shall not be used unless specifically authorized by Owner's CEI Representative. It shall be the Contractor's responsibility to measure and determine the exact quantity of sod required for a complete job at the time of bidding or providing a price quote. The Owner shall not be responsible for additional cost due to the Contractor's under estimating of the quantity of sod for the original bid area.
19. The Landscape Contractor shall insure adequate vertical drainage in all plant beds, planters, and sod areas. Vertical drilling through any compacted fill to native soil shall be accomplished to insure drainage. If well drained fill is necessary to assure positive drainage, this issue shall be brought up by the Landscape Contractor at time of bidding.
20. The Landscape Contractor shall insure that his work does not interrupt established or projected drainage patterns.
21. The Landscape Contractor shall prune, shape and remove dead foliage/limbs from existing plant material to remain. Confirm with the Landscape Architect or Owner the extent of work required at time of Bidding.
22. Mulch - All plant beds shall be top dressed with 4" shredded hardwood mulch (or approved equal).
23. Transplanted Material - The Landscape Contractor shall be responsible for determining and evaluating which plant materials are suitable for transplanting and shall verify this with the Landscape Architect or Owner. The Landscape Contractor shall take all reasonable, horticulturally acceptable measures to assure the successful transplanting of determined plant materials. The Landscape Contractor shall be responsible for replacing any relocated plant materials which die if such measures are not taken, as determined by the Landscape Architect or Owner. Replacement plants shall be of identical species and size if required.
24. MAINTENANCE PRIOR TO FINAL INSPECTION AND ACCEPTANCE:

   Maintenance shall commence after each plant is planted and the maintenance period shall continue until the job or specific phase of the job is accepted by the Landscape Architect or Owner. Extreme care shall be taken to instruct the Owner or his representatives in general maintenance procedures.

   Plant maintenance shall include watering, pruning, weeding, cultivating, mulching, tightening, and repairing of guys, replacement of sick or dead plants, resetting plants to proper grades or upright positions and restoration of the planting saucer and all other care needed for proper growth of the plants.

   During the maintenance period and up to the date of final acceptance, the Landscape Contractor shall do all seasonal spraying and/or dusting of trees and shrubs. Upon completion of all planting, an inspection for acceptance of work will be held. The Landscape Contractor shall notify the Landscape Architect or Owner for scheduling of the inspection 10 days prior to the anticipated date.

   At the time of the inspection, if all of the materials are acceptable, a written notice will be given by the Landscape Architect or Owner to the Landscape Contractor Stating the date when the Maintenance Period ends.

   GUARANTEE AND REPLACEMENT:

   All plant materials shall be guaranteed for one (1) year from the time of final inspection and interim acceptance shall be alive and in satisfactory growth for each specific kind of plant at the end of the guaranteed period.

   At the end of the guarantee period, any plant required under this contract that is dead or not in satisfactory growth, as determined by the Owner or the Landscape Architect, shall be removed and replaced. Replacement plants shall have an extended guarantee, as noted above, from time of replacement.

   All replacements shall be planted of the same kind and size as specified on the plant list. They shall be the responsibility of the Landscape Contractor.
25. TOPSOIL

   Topsoil shall be natural, friable, fertile, fine loamy soil possessing characteristics of representative topsoil in the vicinity that produces heavy growth. Topsoil shall have a pH range of 5.5 to 7.4, free from subsoil, objectionable weeds, litter, sods, stiff clay, stones larger than 1-inch in diameter, stumps, roots, trash, toxic substances, or any other material which may be harmful to plant growth or hinder planting operations. Top soil shall contain a minimum of three percent organic material.
26. UNSUITABLE SUBSOILS

   Locations containing unsuitable subsoil shall be treated by one or more of the following:

   A. Where unsuitability is deemed by Owner or Owner's Representative to be due to excessive compaction caused by heavy equipment and where natural subsoil is other than AASHTO classification of A6 or A7, loosen such areas with spikes, discing, or other means to loosen soil to condition acceptable to Owner. Loosen soil to minimum depth of 12 inches with additional loosening as required to obtain adequate drainage. Contractor may introduce peat moss, sand, or organic matter into the subsoil to obtain adequate measures shall be considered as incidental, without additional cost to Owner.

   B. Where unsuitability is deemed by Owner or Owner's Representative to be due to presence of boards, mortar, concrete, graded aggregate base, or other construction materials in sub grade and where natural subsoil is other than AASHTO classification of A6 or A7, remove debris and objectionable material. Such remedial measures shall be considered as incidental, without additional cost to Owner.

   C. Where unsuitability is deemed by Owner to be because natural subsoil falls into AASHTO classification of A6 or A7 and contains moisture in excess of 30 percent, then installation of sub drainage system or other means described elsewhere in Specifications shall be used. Where such conditions have not been known or revealed prior to planting time and they have not been recognized in preparation of The Drawings and Specifications, then Owner shall issue pricing order to install proper remedial measures.

   D. Planting beds where existing subsoil is determined by Owner to be unsuitable for plant growth in accordance paragraph Unsuitable Subsoil herein shall be excavated to a depth of 12 inches or as needed to provide adequate drainage. Replace excavated soil with planting soil.

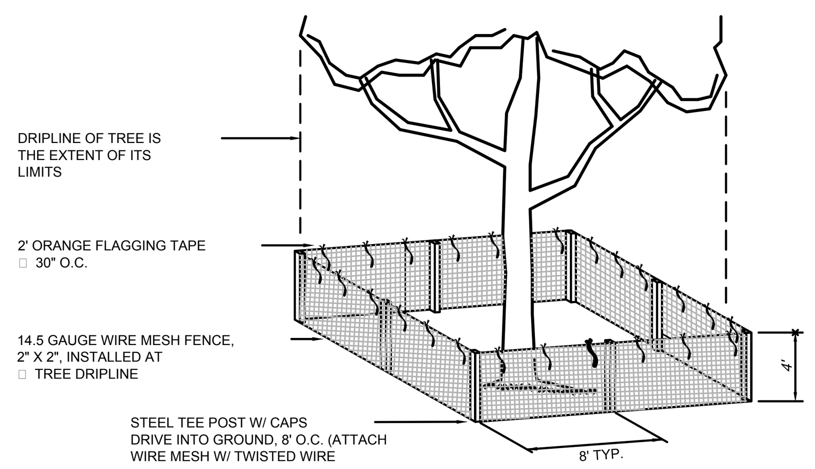

TREE PROTECTION DETAIL

N.T.S.

TREE PROTECTION NOTES:

1. Four (4) foot high solid orange construction fencing shall be installed encompassing the drip line of each tree, or one foot in diameter for each inch of trunk diameter, whichever is greater. When surveyed fencing shall be moved to the edge of the tree protection area (TPA) as indicated on plans and be maintained through completion of construction.
2. Where the TPA occurs within 10 feet of the tree trunk, a trenching device shall be used to sever tree roots. Root raking shall not occur before roots have been cleanly severed.
3. All equipment and/or materials are prohibited within the TPA. Including but not limited to cement wash-out, chemicals, fuel or equipment servicing.
4. Grade changes shall not occur within the TPA. No fill shall be added, removed or stored within the TPA with exception of prescribed potting soil (see item 10).
5. Brush and weeds occuring within the TPA shall be cleared by hand or utilizing only the mower of a light wheeled farm tractor (less than 60 hp). During such activities soil profiles shall not be disturbed.
6. Roto-tilling, disking, root raking or other clearing methods that disturb the soil profile are expressly prohibited.
7. Utility lines and/or irrigation lines shall not occur within the TPA.
8. Saved trees shall be pruned to remove dead and damaged wood, correct structural defects and to provide access and visibility.
9. Pruning shall be completed under direct observation by the Designated Forester of CPH Engineers, Inc. or owner designated ISA certified arborist and be accomplished by an arborist with five years or more experience pruning live oaks to ISA standards. Arborist must obtain approval from the owner prior to commencement of pruning activities. Two week advance notification is required.
10. Landscaping within TPA shall not disturb existing soil profiles. Eight inches of potting soil shall be imported and evenly spread to provide a planting medium within TPA.

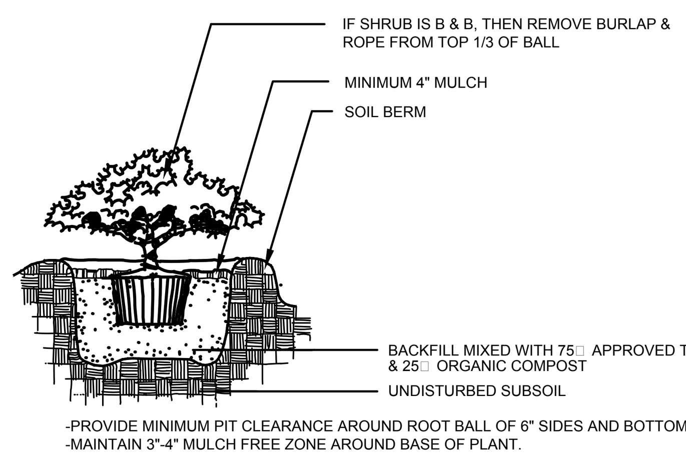

-PROVIDE MINIMUM PIT CLEARANCE AROUND ROOT BALL OF 6" SIDES AND BOTTOM.
-MAINTAIN 3"-4" MULCH FREE ZONE AROUND BASE OF PLANT.

SHRUB PLANTING DETAIL

NTS

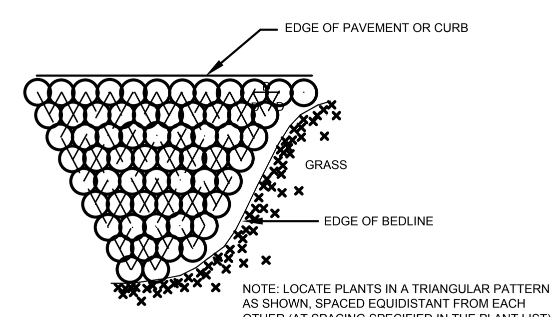

SHRUB/GROUNDCOVER SPACING PLAN

N.T.S.

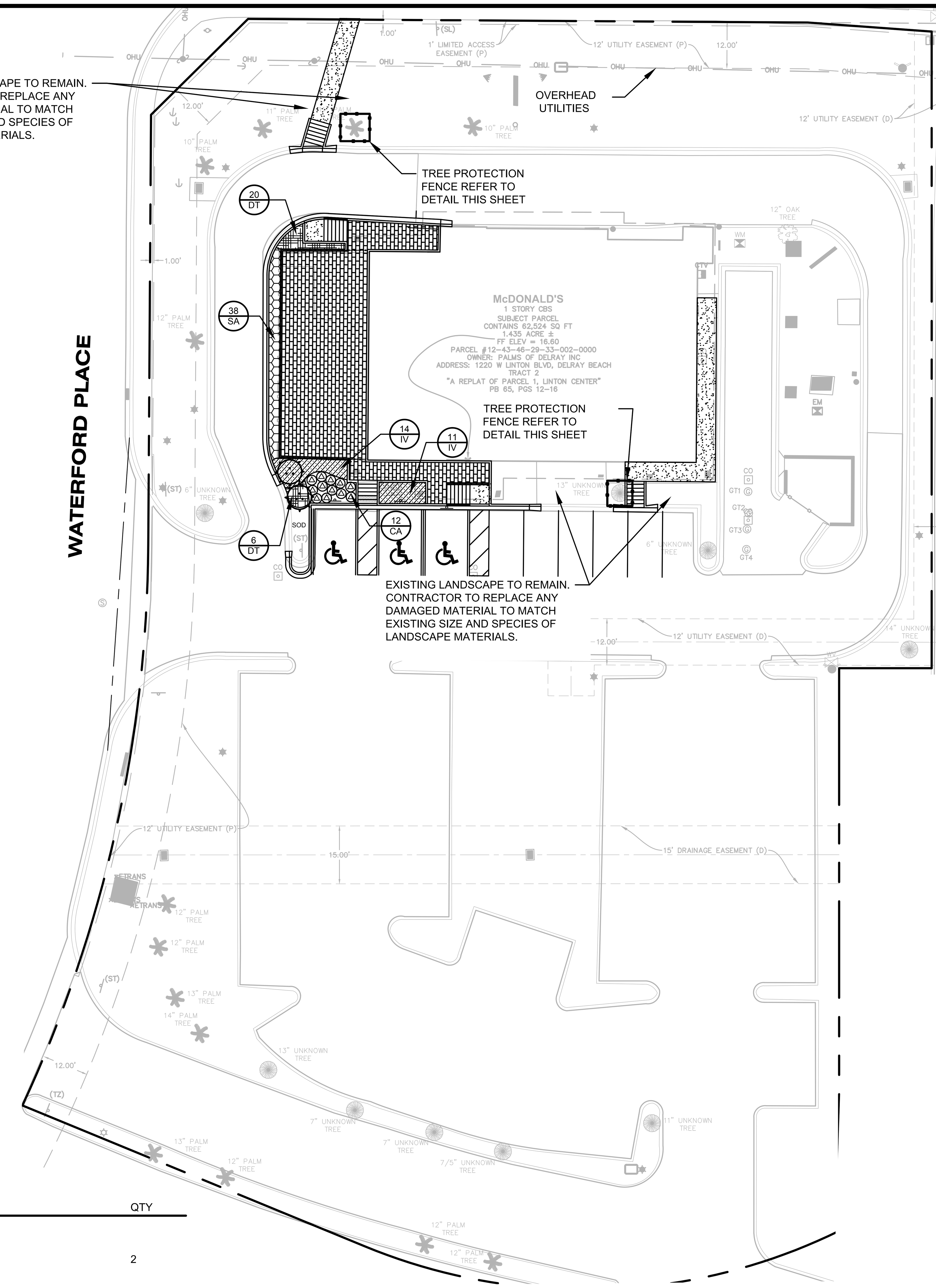

PLANT LIST

SYM.	COMMON NAME	BOTANICAL NAME	DESCRIPTION	QTY
TREES				
PR	SILVER EUROPEAN FAN PALM	CHAMAEROPS HUMILIS CERIFERA	15 GAL., 3' O.A.	2
EX	EXISTING TREES TO REMAIN			
HEDGES / ACCENT				
CA	CRINUM LILY	CRINUM AMERICANUM	7 GAL, 3' H X 30" SPR	12
SHRUBS / GROUNDCOVER				
DT	VARIEGATED BLUEBERRY FLAX	DIANELLA TASMANICA 'VARIEGATA'	1 GAL, 12" H X 4" SPR, 18" OC	26
SA	DWARF SCHEFFLERA	SCHEFFLERA ARBORICOLA 'TRINETTE'	3 GAL., 24" MIN. HT., FULL, 24" O.C.	38
IV	DWARF BURFORD HOLLY	ILEX CORNUTA 'BURFORDII NANA'	3 GAL., 12" MIN. HT., 12" SPRD., 30" O.C.	25
SOD	ST. AUGUSTINE GRASS	STENOTAPHRUM SECUNDATUM	SOLID SOD, CONTRACTOR TO VERIFY QTY.	

NOTE:

PLANT DESCRIPTIONS ARE FOR MINIMUM ACCEPTABLE SPECIFICATIONS. ALL CRITERIA LISTED FOR CONTAINER SIZE, CALIPER, HEIGHT, SPREAD, ETC. MUST BE MET FOR PLANT MATERIAL ACCEPTANCE. FOR EXAMPLE, IF A THREE GALLON SHRUB DOES NOT MEET THE HEIGHT OR SPREAD SPECIFICATION, IT WILL NOT BE ACCEPTED.

IF SPECIFIED PLANTS ARE UNAVAILABLE AT TIME OF CONSTRUCTION, CONTRACTOR MAY REPLACE SPECIFIED PLANTS WITH PLANTS APPROVED BY LANDSCAPE ARCHITECT AND CITY STAFF.

ALL OPEN SPACE AREAS WITHIN THE PROPERTY SHALL BE SODDED UNLESS PAVED, SEEDED AND MULCHED OR PLANTED WITH SHRUBS AND GROUND COVER.

CONTRACTOR TO MODIFY EXISTING IRRIGATION SYSTEM TO INSURE ADEQUATE IRRIGATION FOR ALL NEW PLANT MATERIAL

CONTRACTOR SHALL REPLACE ANY EXISTING SOD OR OTHER PLANT MATERIALS DAMAGED DURING CONSTRUCTION IN AREAS THAT ARE OUTSIDE PROPOSED LANDSCAPE AS SHOWN ON THE PLAN.

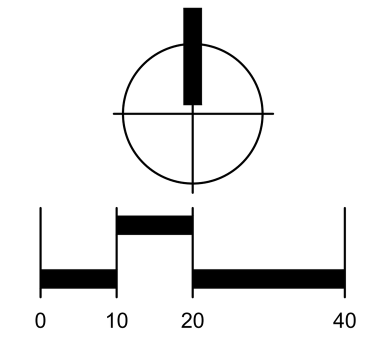

Always call 811 two full business days before you dig
Sunshine811.com
www.sunshine811.com

McDONALD'S PROJECT CODE: 009-1060

cph
www.cphcorp.com
A Full Service A & E Firm
Architects
Engineers
Environmental
Landscape Architects
M / E / P
Planners
Surveyors
Traffic / Transportation

Offices in:
- Florida
- Puerto Rico
- Connecticut
- Maryland

REGISTERED LANDSCAPE ARCHITECT MAXWELL D. SPANN LA 6666780 STATE OF FLORIDA
Maxwell D. Spann, RLA
FL. LA6666780
Feb 03, 2017

No.	Date	Revision	By
1			
2			
3			
4			
5			
6			
7			

Designed by:	ARS
Drawn by:	RES
Checked by:	MDS
Approved by:	MDS
Scale:	AS SHOWN
Date:	APRIL 2016
Job No.:	M29907.MRP

© 2017

Plans Prepared By:
CPH, Inc.
1992 SW 1st. St.
Miami, FL 33135
Ph: 305.274.4805
Licenses:
Eng. C.O.A. No. 3215
Survey L.B. No. 7143
Arch. Lic. No. AA2600926
Lndscp. Lic. No. LC0000298

LANDSCAPE PLAN

McDonald's

LINTON MRP
CITY OF DELRAY BEACH / FLORIDA

Sheet No.

L-1

J:\M29907.MRP\Landscape\DWG\PreliminaryDesign\Plans\M29907-LSP.dwg Feb 03, 2017 - 1:52pm rsmith

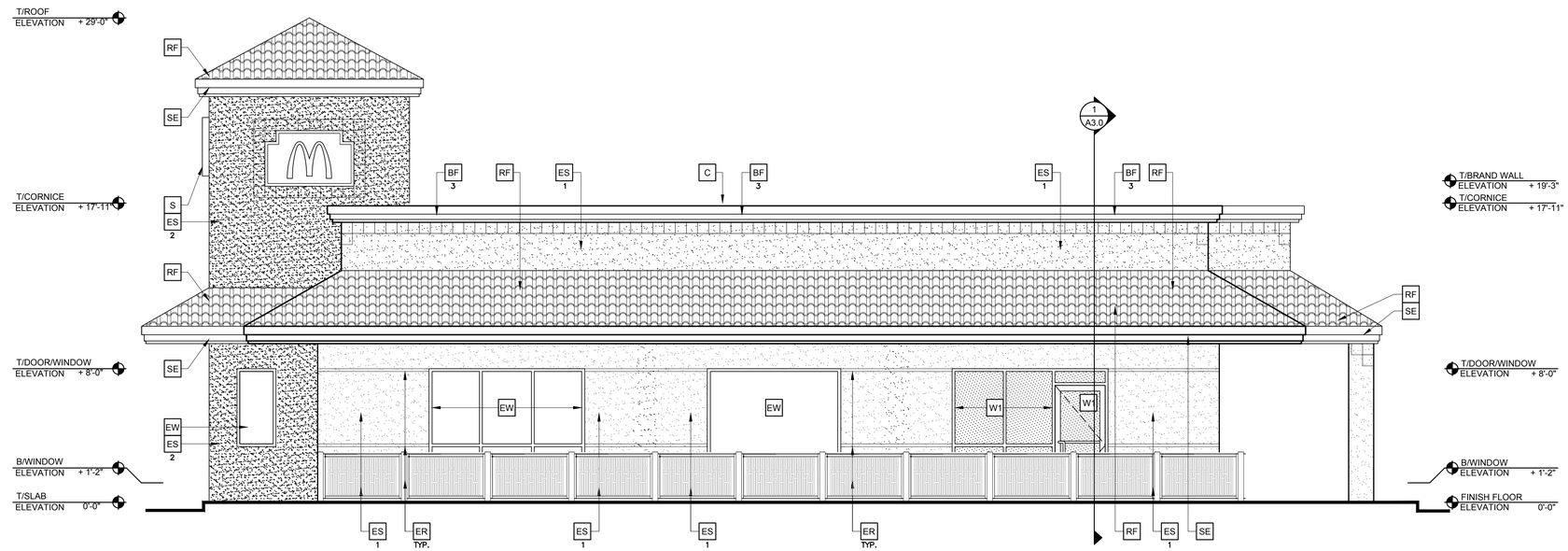

WEST ELEVATION

SCALE: 1/4" =1'-0"

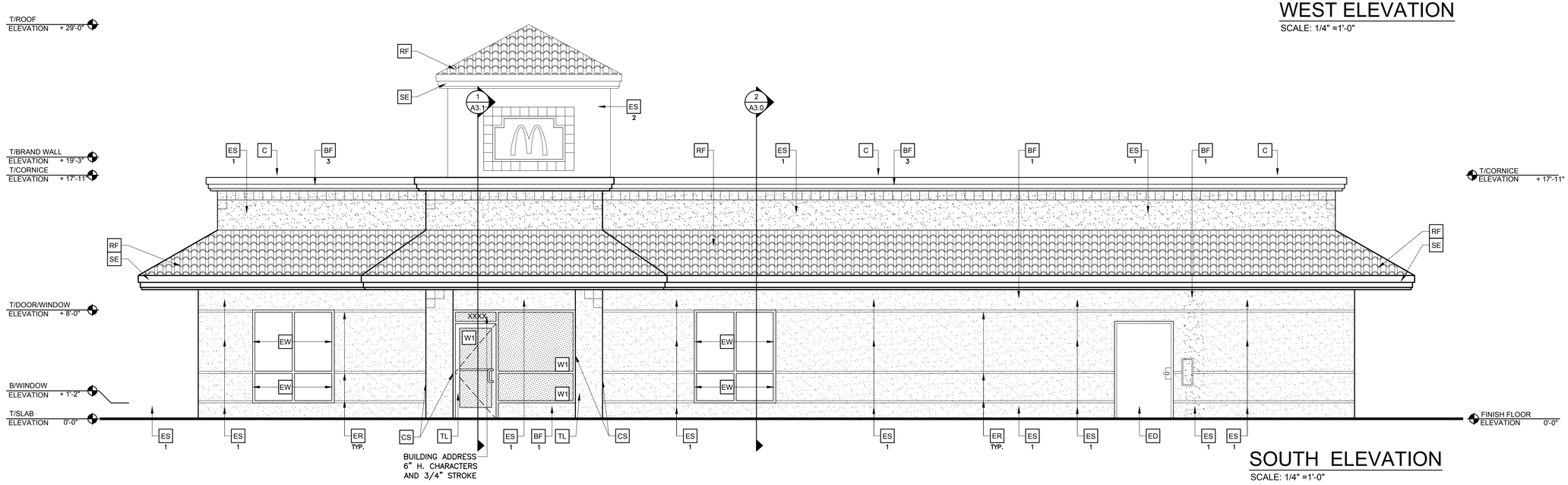

SOUTH ELEVATION

SCALE: 1/4" =1'-0"

COLOR LEGEND (ALL COLORS ARE PER BENJAMIN MOORE PAINTS, U.N.O.)

GRAY SCHEME

BASE BUILDING:	STORM CLOUD GRAY BM-2140-40
BUILDING ACCENT:	IRON MOUNTAIN 2134-30
CORNICE:	WHITE SAND OC-10

KEY NOTES

- BF — NEW STUCCO FINISH; TEXTURE TO MATCH EXISTING COLOR: X = 1 = BUILDING BASE; 2 = BUILDING ACCENT; 3 = CORNICE
- C — METAL COPING - COLOR TO MATCH SURROUNDING MATERIAL
- CC — (RMHC) COIN COLLECTOR - UNIT #WPT DT 2000 CMU CALL 1-888-743-7435 TO ORDER. REFER TO A5.0
- ED — EXISTING HOLLOW METAL DOOR - PAINTED BASE BUILDING COLOR
- EJ — EXISTING STUCCO JOINT TO REMAIN
- ER — EXISTING STUCCO REVEALS
- ES — EXISTING STUCCO FINISH WITH NEW PAINT FINISH COLOR: X = 1 = BUILDING BASE; 2 = BUILDING ACCENT
- EW — EXISTING WINDOW ASSEMBLY
- FB — FILL BOX; XX — CO2 = BULK CO2 FILL BOX (EQPM SCHEDULE ITEM 49.00); BO = BULK OIL FILL BOX (EQPM SCHEDULE ITEM 700.18); CONFIRM USE WITH MCD PROJECT MANAGER
- GD — EXISTING ALUMINUM GUTTER & DOWNSPOUT - PAINTED COLOR: BUILDING BASE
- GR — EXISTING ALUMINUM GUARD RAIL
- MJ — HORIZONTAL MOVEMENT JOINT; CAULK JOINT, COLOR TO MATCH GROUT
- MS — METAL STUD INFILL
- PB — EXISTING PIPE BOLLARD - PAINTED YELLOW
- PT — EXISTING PASS-THRU COIN COLLECTOR
- RF — EXISTING TERRA COTTA BARREL TILE OVER EXISTING MANSARD ROOF FRAMING
- S — McDONALD'S SIGNAGE BY OTHERS - UNDER SEPARATE PERMIT.
- SE — EXISTING SOFFIT TO REMAIN. NEW PAINT COLOR: CORNICE
- SJ — NEW STUCCO JOINT
- W1 — NEW EXTERIOR WINDOW ASSEMBLY - HIGH-IMPACT TEMPERED GLASS - SEE ASSEMBLY NOTES A3.0
- W2 — EXISTING DRIVE-THRU WINDOW; XX — SLIDE DIRECTION: RL = RIGHT TO LEFT, LR = LEFT TO RIGHT
- W3 — NEW DRIVE-THRU WINDOW BY READY ACCESS, 275 SERIES; CONFIRM OPTIONS, AND SIZE WITH MCD PROJECT MANAGER OPTIONS INCLUDE: TRANSOM (SHOWN ON ELEVATION); XX — SLIDE DIRECTION: LR = LEFT TO RIGHT; T = TEMPERED GLAZING; HIGH IMPACT

SIGNAGE SUPPORT NOTE:
UNIBODY FASCIA SIGN WALL SUPPORTS TO BE VERIFIED WITH McDONALD'S AREA CONSTRUCTION MANAGER AND COORDINATED WITH SIGN MANUFACTURER.

REV	DATE	DESCRIPTION	BY
3	04/04/17	REVISED BUILDING COLOR	
2	02/06/17	REVISED BUILDING COLOR	JESS
1	12/13/16	OWNER REVISION	JESS

STATE OF FLORIDA — JOHN A. BAER — 4/04/2017 — REGISTERED ARCHITECT — AR93193

JOHN A. BAER, AIA

Licenses - Arch. Lic. No. AA26002608 - Eng. C.O.A. No. 3215 - Landscape Lic. No. LC0000298 - Survey LB No. 7143

A FULL SERVICE A & E FIRM
Architects, Engineers, Environmental, Landscape Architects, M.E.P., Planners, Surveyors, Traffic / Transportation

PREPARED BY
cph
www.cphcorp.com
500 West Fulton Street, Sanford, Florida 32771, Phone 407 322-4841
© 2016

© 2013 McDonald's USA, LLC

PREPARED FOR:
McDonald's USA, LLC

These drawings and specifications are the confidential and proprietary property of McDonald's USA, LLC and shall not be copied or reproduced without written authorization. The contract documents were prepared for use on this specific site in conjunction with its issue date and are not suitable for use at a different site or at a subsequent time. Use of these documents for reuse on example on another project requires the services of properly licensed architects and engineers. Reproduction of the contract documents for reuse on another project is not authorized.

DRAWN BY	STD ISSUE DATE
JR	4-04-2017
REVIEWED BY	DATE ISSUED
MDG/JAB	5-11-16

TITLE
ARCADE CONVERSION
BASELINE MRP - RETAINED MANSARD

DESCRIPTION
CANOPY - PARAPET VERSION
STOCK STONE WALLS
COLOR SCHEME: KHAKI

SITE ID 009-1060

SITE ADDRESS McDONALD'S LINTON- M29907.MRP
1220 LINTON BLVD, DELRAY BEACH, FL 33445

SHEET NO.
A2.0
EXISTING ELEVATIONS

C:\Users\mgumond\appdata\local\temp\AcPublish_16596\091060_Permit_2016-04-08_Building_13_M29907.MRP_A2.0 Elevations_v1.dwg Apr 04, 2017 - 11:38am mgumond

NOTE: THE SCALE OF THESE PLANS MAY HAVE CHANGED DUE TO REPRODUCTION

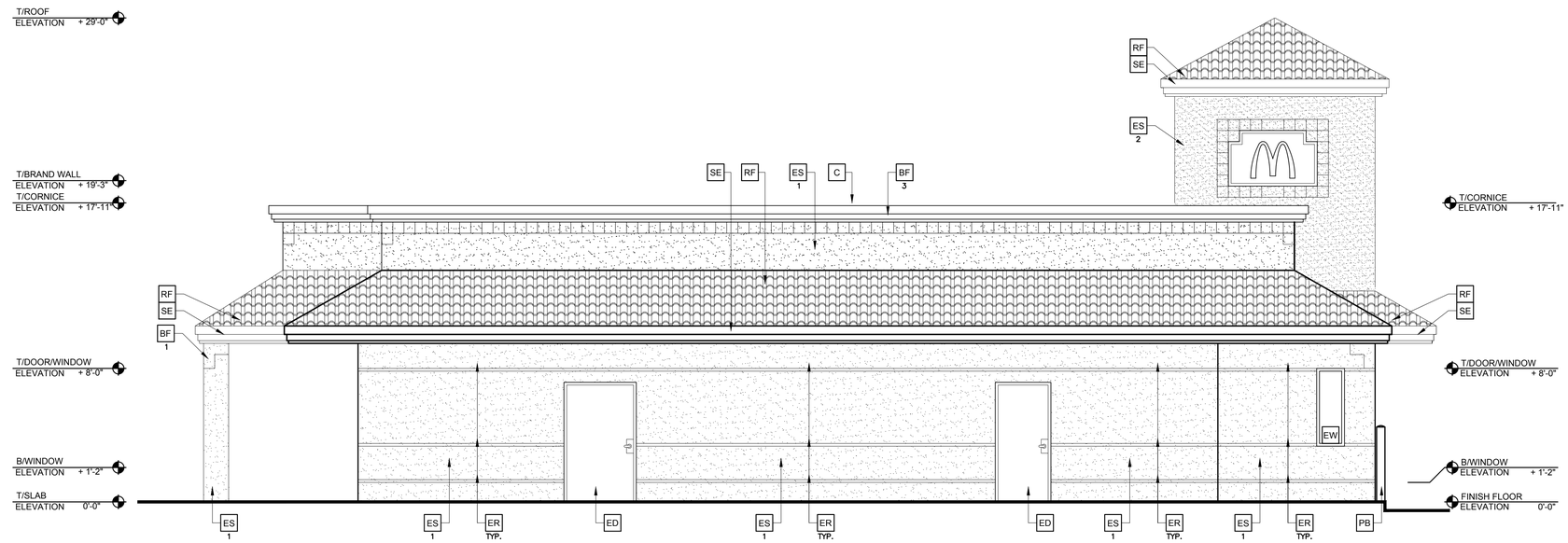

EAST ELEVATION

SCALE: 1/4" =1'-0"

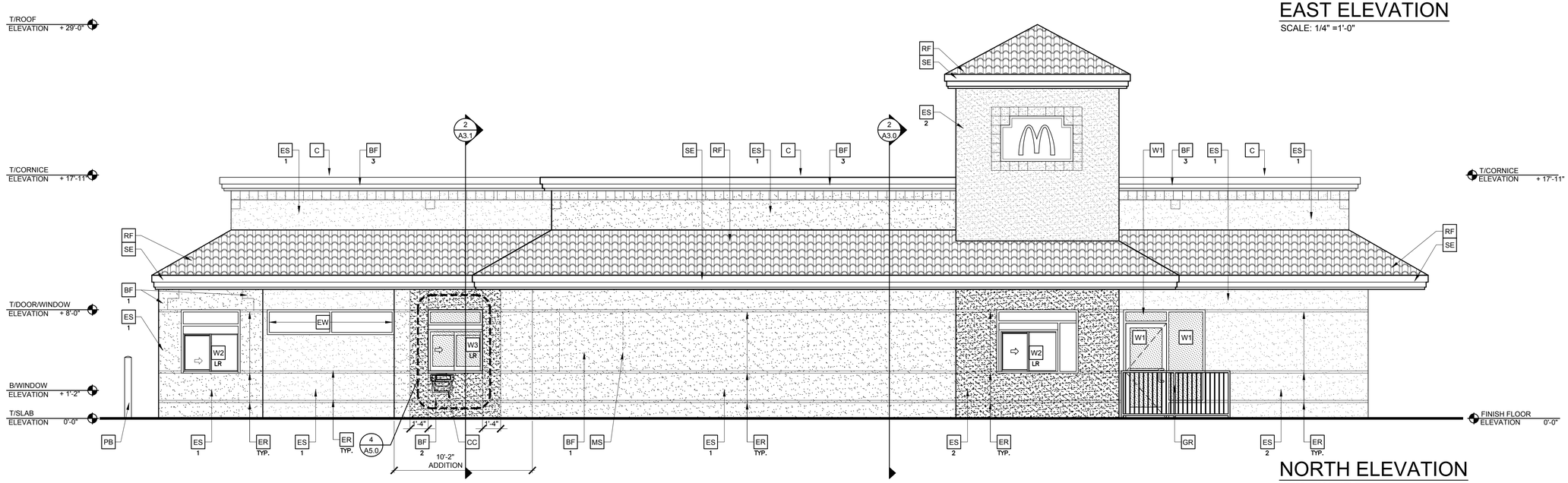

NORTH ELEVATION

SCALE: 1/4" =1'-0"

COLOR LEGEND (ALL COLORS ARE PER BENJAMIN MOORE PAINTS, U.N.O.)

GRAY SCHEME

3

BASE BUILDING:	STORM CLOUD GRAY BM-2140-40
BUILDING ACCENT:	IRON MOUNTAIN 2134-30
CORNICE:	WHITE SAND OC-10

KEY NOTES

- BF (X: 1 = BUILDING BASE, 2 = BUILDING ACCENT, 3 = CORNICE) — NEW STUCCO FINISH; TEXTURE TO MATCH EXISTING COLOR:
- C — METAL COPING - COLOR TO MATCH SURROUNDING MATERIAL
- CC — (RMHC) COIN COLLECTOR - UNIT #WPT DT 2000 CMU CALL 1-888-743-7435 TO ORDER. REFER TO A5.0
- ED — EXISTING HOLLOW METAL DOOR - PAINTED BASE BUILDING COLOR
- EJ — EXISTING STUCCO JOINT TO REMAIN
- ER — EXISTING STUCCO REVEALS
- ES (X: 1 = BUILDING BASE, 2 = BUILDING ACCENT) — EXISTING STUCCO FINISH WITH NEW PAINT FINISH COLOR:
- EW — EXISTING WINDOW ASSEMBLY
- FB — FILL BOX
  - XX — CO2 = BULK CO2 FILL BOX (EQPM SCHEDULE ITEM 49.00); BO = BULK OIL FILL BOX (EQPM SCHEDULE ITEM 700.18); CONFIRM USE WITH MCD PROJECT MANAGER
- GD — EXISTING ALUMINUM GUTTER & DOWNSPOUT - PAINTED COLOR: BUILDING BASE
- GR — EXISTING ALUMINUM GUARD RAIL
- MJ — HORIZONTAL MOVEMENT JOINT; CAULK JOINT, COLOR TO MATCH GROUT
- MS — METAL STUD INFILL
- PB — EXISTING PIPE BOLLARD - PAINTED YELLOW
- PT — EXISTING PASS-THRU COIN COLLECTOR
- RF — EXISTING TERRA COTTA BARREL TILE OVER EXISTING MANSARD ROOF FRAMING
- S — McDONALD'S SIGNAGE BY OTHERS - UNDER SEPARATE PERMIT.
- SE — EXISTING SOFFIT TO REMAIN. NEW PAINT COLOR: CORNICE
- SJ — NEW STUCCO JOINT
- W1 — NEW EXTERIOR WINDOW ASSEMBLY - HIGH-IMPACT TEMPERED GLASS - SEE ASSEMBLY NOTES A3.0
- W2 — EXISTING DRIVE-THRU WINDOW
  - XX — SLIDE DIRECTION: RL = RIGHT TO LEFT; LR = LEFT TO RIGHT
- W3 — NEW DRIVE-THRU WINDOW BY READY ACCESS, 275 SERIES; CONFIRM OPTIONS, AND SIZE WITH MCD PROJECT MANAGER OPTIONS INCLUDE: TRANSOM (SHOWN ON ELEVATION)
  - XX — SLIDE DIRECTION: LR = LEFT TO RIGHT
  - T = TEMPERED GLAZING; HIGH IMPACT

SIGNAGE SUPPORT NOTE:
UNIBODY FASCIA SIGN WALL SUPPORTS TO BE VERIFIED WITH McDONALD'S AREA CONSTRUCTION MANAGER AND COORDINATED WITH SIGN MANUFACTURER.

REV	DATE	DESCRIPTION	BY
3	04/04/17	REVISED BUILDING COLOR	JESS
2	02/06/17	REVISED BUILDING COLOR	JESS
1	12/13/16	OWNER REVISION	

STATE OF FLORIDA — JOHN A. BAER — REGISTERED ARCHITECT — AR93193 — 4/04/2017

JOHN A. BAER, AIA

Licenses – Arch. Lic. No. AA0003605 – Eng. C.O.A. No. 3215 – Landscape Lic. No. LC0000298 – Survey LB No. 7143

A FULL SERVICE A & E FIRM
Architects, Engineers, Environmental, Landscape Architects, M.E.P., Planners, Surveyors, Traffic / Transportation
© 2016

PREPARED BY
cph
www.cphcorp.com
500 West Fulton Street, Sanford, Florida 32771
Phone 407 322-4841

© 2013 McDonald's USA, LLC

PREPARED FOR:
McDonald's USA, LLC

These drawings and specifications are the confidential and proprietary property of McDonald's USA, LLC and shall not be copied or reproduced without written authorization. The contract documents were prepared for use on this specific site in conjunction with its issue date and are not suitable for use at a different site or at a later date. Use of these drawings for reference or example on another project requires the services of properly licensed architects and engineers. Reproduction of the contract documents for reuse on another project is not authorized.

DRAWN BY: JR
STD ISSUE DATE: 4-04-2017
REVIEWED BY: MDG/JAB
DATE ISSUED: 5-11-16

TITLE: ARCADE CONVERSION
BASELINE MRP - RETAINED MANSARD

DESCRIPTION: CANOPY - PARAPET VERSION
STORE NUMBER: 009-1060
COLOR SCHEME: KHAKI

SITE ID: 009-1060
SITE ADDRESS: McDONALD'S LINTON- M29907.MRP
1220 LINTON BLVD, DELRAY BEACH, FL 33445

SHEET NO. A2.1
EXISTING ELEVATIONS

C:\Users\mgumond\appdata\local\temp\AcPublish_16596\091060_Permit_2016-04-08_Building_14_M29907.MRP_A2.1 Elevations_v1.dwg Apr 04, 2017 - 11:37am jsibayan

NOTE: THE SCALE OF THESE PLANS MAY HAVE CHANGED DUE TO REPRODUCTION

RECEIVED BY
MAR 21 2017
City of Delray Beach
Planning & Zoning

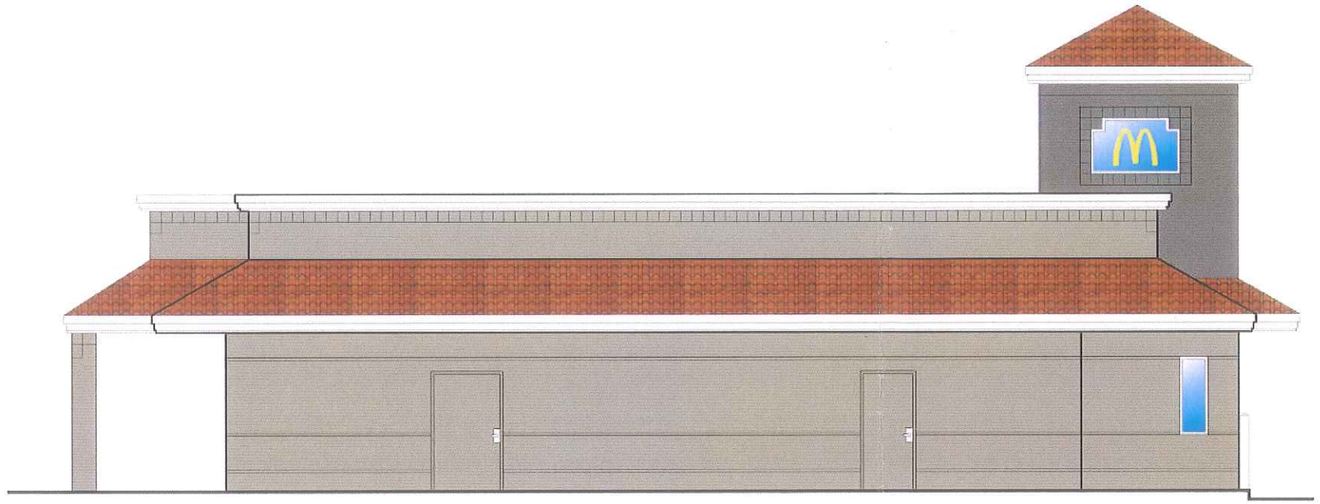

EAST ELEVATION
SCALE: 1/4" = 1'-0"

COLOR & MATERIAL LEGEND

BUILDING BASE (STUCCO)
BENJAMIN MOORE
STORM CLOUD GRAY_BM-2140-40

BUILDING ACCENT (STUCCO)
BENJAMIN MOORE
IRON MOUNTAIN #2134-30

ROOF
EXISTING TERRA COTTA
BARREL TILE

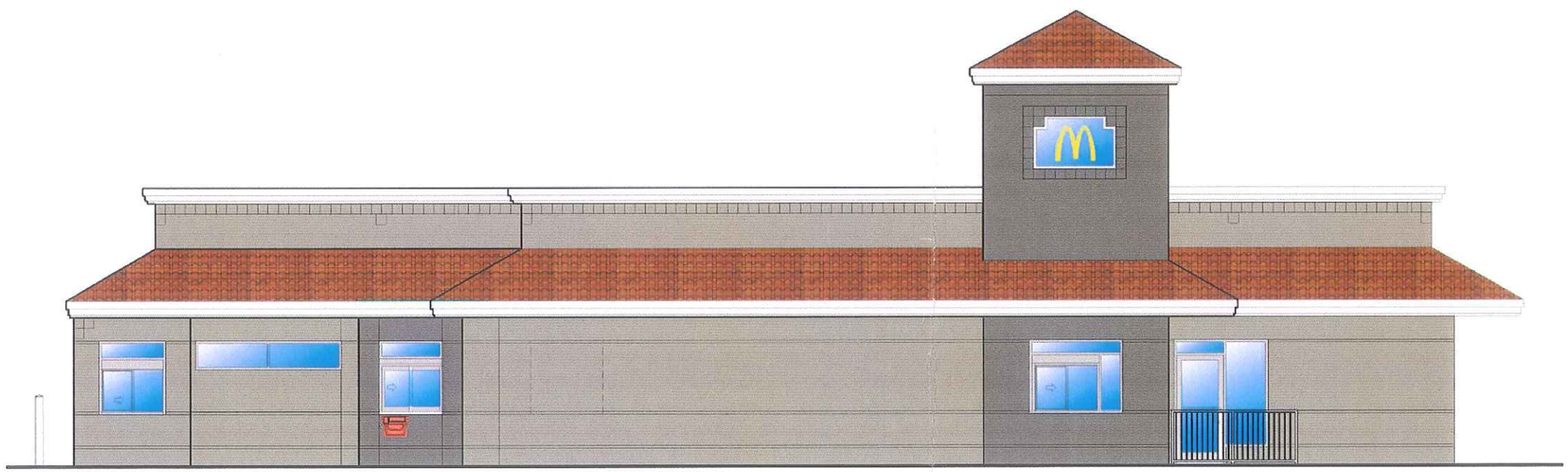

NORTH ELEVATION
SCALE: 1/4" = 1'-0"

LINTON
McDonald's
SITE CODE# 009-1060 JANUARY 18, 2017

cph
www.cphcorp.com
A Full Service A & E Firm
Architects
Engineers
Environmental
Landscape Architects
M / E / P
Planners
Structural
Surveyors
Traffic/Transportation
Offices In:
• Florida
• Puerto Rico
• Connecticut
• Maryland

RECEIVED BY
MAR 21 2017
City of Delray Beach
Planning & Zoning

WEST ELEVATION
SCALE: 1/4" = 1'-0"

COLOR & MATERIAL LEGEND

BUILDING BASE (STUCCO)
BENJAMIN MOORE
STORM CLOUD GRAY_BM-2140-40

BUILDING ACCENT (STUCCO)
BENJAMIN MOORE
IRON MOUNTAIN #2134-30

ROOF
EXISTING TERRA COTTA
BARREL TILE

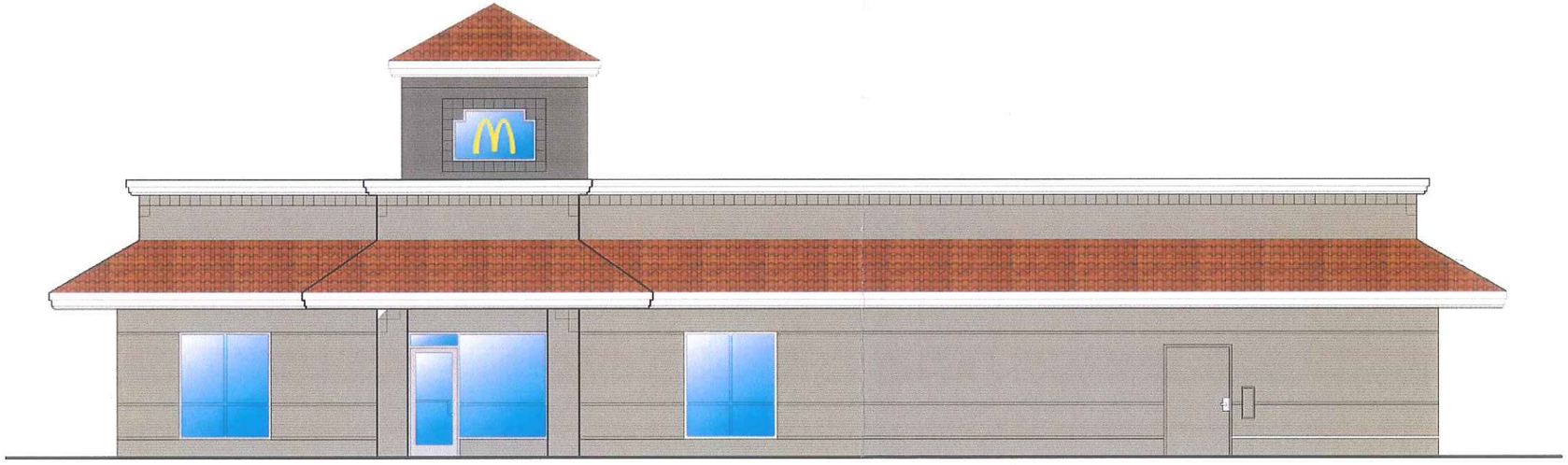

SOUTH ELEVATION
SCALE: 1/4" = 1'-0"

LINTON
McDonald's
SITE CODE# 009-1060 JANUARY 18, 2017

cph
www.cphcorp.com
A Full Service A & E Firm
Architects
Engineers
Environmental
Landscape Architects
M / E / P
Planners
Structural
Surveyors
Traffic/Transportation
Offices In:
• Florida
• Puerto Rico
• Connecticut
• Maryland