HARBOUR'S EDGE
PARKING IMPROVEMENTS

100% CONSTRUCTION DOCUMENTS

PREPARED FOR:
LIFESPACE COMMUNITIES INC.
WEST DES MOINES, IA 50266

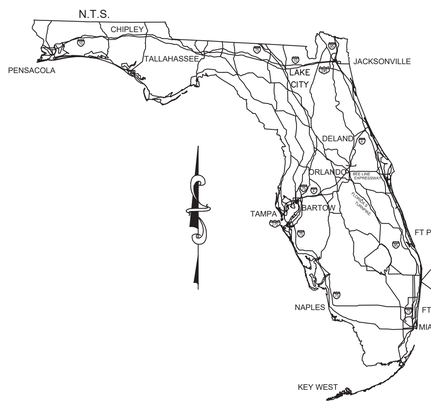

LOCATION MAP

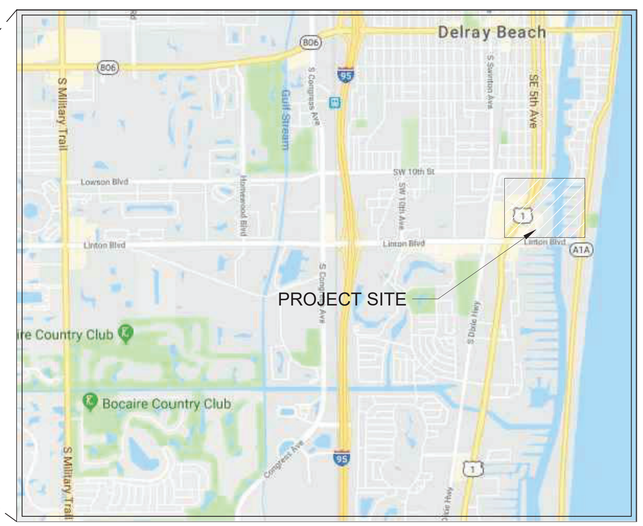

PROJECT LOCATED IN
SECTION 21 / TOWNSHIP 46 SOUTH / RANGE 43 EAST
PALM BEACH COUNTY, FL

SHEET INDEX

T1.0	COVER SHEET
CIVIL	
C1.0	GENERAL NOTES
C2.0-C2.2	SITE DEMOLITION PLAN
C3.0-C3.2	STORMWATER POLLUTION PREVENTION PLAN
C4.0-C4.2	PAVING, GRADING, & DRAINAGE PLAN
C5.0- C5.3	SITE DETAILS
C6.0-C6.2	SIGNING AND PAVEMENT MARKING PLAN
LANDSCAPE ARCHITECTURE	
LP-101	LANDSCAPE PLAN
LP-201	TREE DISPOSITION LIST AND MITIGATION CHART
LP-301	LANDSCAPE DETAILS
LP-302	LANDSCAPE SPECIFICATIONS
IP-101	IRRIGATION PLAN
IP-301	IRRIGATION DETAILS
ELECTRICAL	
E0.1	ELECTRICAL SYMBOLS, NOTES AND SPECIFICATIONS
E1.0	ELECTRICAL SITE PLAN
E2.1	ENLARGED LIGHTING PLANS AND DETAILS
E2.2	ENLARGED PHOTOMETRIC PLANS

PERMIT TRACKING

PERMITTING AGENCY	PERMIT NAME	PERMIT NUMBER	EXPIRATION DATE

VERTICAL DATUM: NORTH AMERICAN VERTICAL DATUM OF 1988 (NAVD88)

HORIZONTAL DATUM: NORTH AMERICAN DATUM OF 1983, FLORIDA STATE PLANES, EAST ZONE, U.S. FEET (NAD83)

811 Know what's below. Call before you dig.

PREPARED BY:
WGI
2035 Vista Parkway, West Palm Beach, FL 33411
Phone No. 866.909.2220 www.wginc.com
Cert No. 6091 - LB No. 7055

CONSULTANTS:

PROJECT TITLE:

HARBOUR'S EDGE
PARKING IMPROVEMENTS
401 EAST LINTON BLVD
DELRAY BEACH, FL 33483

ENGINEER OF RECORD
CHRISTOPHER J. HOLMES, PE
PE# 66344
September 18, 2019

NO:	DATE:	DESCRIPTION:

DRAWN DATE:	2019-07-07
DRAWN BY:	GAT
CHECKED BY:	CJH
PROJECT #:	4224.00

100% CONSTRUCTION PLANS

SHEET #:	TOTAL SHEETS
T1.0	27

GENERAL NOTES

1. REGULATIONS - ALL CONSTRUCTION SHALL BE DONE IN A WORKMAN LIKE MANNER AND SHALL CONFORM TO ALL CITY OF DELRAY BEACH, STATE AND FEDERAL REGULATIONS AND OR CODES INCLUDING BUT NOT LIMITED TO THE CURRENT PALM BEACH COUNTY AND FLORIDA DEPARTMENT OF TRANSPORTATION (FDOT) LATEST REGULATIONS. THE CONTRACTOR SHALL BE RESPONSIBLE FOR OBTAINING ALL PERMITS AND LICENSES TO BEGIN WORK AND PAY ALL REQUIRED FEES ASSOCIATED WITH SAME.

2. STANDARD DETAILS AND SPECIFICATIONS - STATE, COUNTY AND CITY OF DELRAY BEACH CONSTRUCTION DETAILS AND SPECIFICATIONS SHALL BE APPLIED TO THE APPROPRIATE AREAS OF THE PLANS, GENERALLY DIFFERENTIATED BY PROPERTY OWNERSHIP LINES OR INTENT OF THE DESIGN. ANY CONFLICTS BETWEEN GOVERNING STANDARDS SHALL BE BROUGHT TO THE ATTENTION OF THE ENGINEER.

3. DATUM - UNLESS OTHERWISE NOTED, ELEVATIONS SHOWN HEREON REFER TO NORTH AMERICAN VERTICAL DATUM OF 1988 (NAVD 88). HORIZONTAL DATA SHOWN HEREON REFERS TO N.A.D. 83 FLORIDA STATE PLANE EAST ZONE. ANY DISCREPANCY SHALL BE BROUGHT TO THE ATTENTION OF THE ENGINEER BEFORE CONSTRUCTION BEGINS OR RESUMES.

4. CHANGES - ALL CHANGES SHALL BE SUBMITTED IN WRITING AND APPROVED BY THE ENGINEER PRIOR TO CONSTRUCTION.

5. GUARANTEE - THE CONTRACTOR SHALL GUARANTEE ALL WORK AND MATERIAL FOR A PERIOD OF ONE YEAR FROM THE DATE OF PROJECT ACCEPTANCE, DURING WHICH ALL FAULTY CONSTRUCTION AND/OR MATERIAL SHALL BE REPLACED AT THE CONTRACTORS EXPENSE.

6. SHOP DRAWINGS - PRIOR TO CONSTRUCTION, THE CONTRACTOR SHALL SUBMIT SHOP DRAWINGS TO THE ENGINEER FOR REVIEW AND APPROVAL.

7. MAINTENANCE OF TRAFFIC (M.O.T.) - UNLESS OTHERWISE PERMITTED, THE CONTRACTOR SHALL MAINTAIN EXISTING PEDESTRIAN AND VEHICULAR TRAFFIC AND ACCESS AT ALL TIMES DURING CONSTRUCTION AND SHALL PROVIDE THE NECESSARY TEMPORARY PAVEMENT, BARRICADES, LIGHTING, SIGNS, FLAGMEN, ETC. FOR THE SAFETY OF THE PUBLIC. THE CONTRACTOR SHALL SUBMIT M.O.T. AND A.D.A. ACCESS PLANS TO THE ENGINEER FOR REVIEW AND PROPERTY OWNER APPROVAL OF WORK TO BE DONE WITHIN THE PROJECT SITE. M.O.T. SHALL BE IN ACCORDANCE WITH A.D.A., M.U.T.C.D. AND F.D.O.T. INDEX SERIES 600.

8. RECORD DRAWINGS - THE CONTRACTOR SHALL SUBMIT RECORD DRAWINGS TO THE ENGINEER FOR REVIEW AND APPROVAL. RECORD DRAWINGS MUST BE SIGNED AND SEALED BY A PROFESSIONAL SURVEYOR REGISTERED IN THE STATE OF FLORIDA AND BE REFERENCED TO THE DATUM SHOWN IN THE CONSTRUCTION PLANS. ANY UNMARKED UTILITIES ENCOUNTERED DURING CONSTRUCTION SHALL BE INCORPORATED INTO THE RECORD DRAWINGS. ALL UTILITIES MUST BE SHOWN IN THEIR AS-BUILT LOCATION.

9. RESPONSIBILITY - THE CONTRACTOR SHALL BE RESPONSIBLE FOR ALL EXISTING UTILITIES WHETHER SHOWN ON THE PLANS OR NOT. THE CONTRACTOR SHALL VERIFY THE LOCATION, SIZE AND MATERIAL OF ALL UTILITIES PRIOR TO THE COMMENCEMENT OF CONSTRUCTION. ANY DISCREPANCIES SHALL BE BROUGHT TO THE ATTENTION OF THE ENGINEER. THE APPROPRIATE UTILITY COMPANY SHALL BE NOTIFIED PRIOR TO ANY CONSTRUCTION IN OR AROUND THAT UTILITY. CALL "SUNSHINE STATE ONE CALL" AT 1-800-432-4770 PRIOR TO ANY EXCAVATION. THE ENGINEER AND OWNER SHALL BE HELD HARMLESS AGAINST ALL CLAIMS OR DAMAGES.

10. RESTORATION - THE CONTRACTOR SHALL IMMEDIATELY REPAIR AND RESTORE EXISTING SITE FEATURES INCLUDING PAVEMENT, DRIVEWAYS, PIPES, FENCES, TRAFFIC CONTROL DEVICES, MAILBOXES AND PROPERTY CORNERS DAMAGED AS A RESULT OF CONSTRUCTION ACTIVITIES. THE REPAIR AND RESTORATION SHALL CONFIRM TO APPLICABLE STANDARDS AS GOVERNED.

11. OPEN TRENCHES - ALL OPEN TRENCHES AND HOLES SHALL BE PROPERLY MARKED AND BARRICADED TO INSURE THE SAFETY OF VEHICULAR AND PEDESTRIAN TRAFFIC. NO OPEN TRENCHES OR HOLES SHALL BE LEFT OPEN DURING NIGHT TIME HOURS WITHOUT EXPRESSED PERMISSION FROM THE OWNER, ENGINEER AND REGULATING AGENCIES. ALL TRENCHES SHALL COMPLY WITH OSHA TRENCH SAFETY ACT PROVISIONS.

12. CONFLICTS - ANY CONFLICTING INFORMATION BETWEEN REGULATING AGENCIES AND THE CONSTRUCTION DOCUMENTS SHALL BE IMMEDIATELY BROUGHT TO THE ATTENTION OF THE ENGINEER. AFFECTED CONSTRUCTION SHALL NOT COMMENCE OR RESUME UNTIL PERMISSION IS GRANTED BY THE ENGINEER OR OWNER.

13. CONTRACTOR SHALL BE RESPONSIBLE TO COORDINATE WITH FLORIDA POWER AND LIGHT (FPL) ON ANY WORK IN THE VICINITY OF OVERHEAD AND UNDERGROUND POWER LINES.

14. CONTRACTOR SHALL VERIFY PROPER CLEARANCE BELOW EXISTING OVERHEAD POWER LINES PRIOR TO WORKING WITHIN THE VICINITY OF POWER LINES.

15. CONTRACTOR SHALL BE EXTREMELY CAUTIOUS WHEN WORKING NEAR TREES WHICH ARE TO BE SAVED, WHETHER SHOWN ON THE LANDSCAPE PLANS OR DESIGNATED IN THE FIELD. CONTRACTOR SHALL BE RESPONSIBLE FOR REPLACEMENT, IN KIND, OF ANY TREES SPECIFIED TO BE SAVED THAT ARE DAMAGED AS A RESULT OF WORK CONDUCTED.

16. NO CONSTRUCTION SHALL COMMENCE UNTIL ALL REQUIRED PERMITS AND APPROVALS HAVE BEE SECURED AND THE CONTRACTOR IS ISSUED A NOTICE TO PROCEED.

CLEARING AND GRUBBING

1. CLEARING - CLEARING SHALL BE LIMITED TO THE CONSTRUCTION AREA AND/OR AS DIRECTED BY THE ENGINEER OR OWNER AND APPROVED BY THE CITY OF DELRAY BEACH.

2. GRUBBING - ALL STUMPS, ROOTS, BURIED LOGS OR OTHER UNSUITABLE MATERIAL WITHIN THE LIMITS OF PAVEMENT CONSTRUCTION SHALL BE REMOVED TO A DEPTH OF 30" BELOW FINISHED PAVEMENT ELEVATION AND REPLACED WITH CLEAN FILL.

3. DEBRIS REMOVAL - ALL DEBRIS SHALL BE REMOVED FROM THE SITE AND LEGALLY DISPOSED. ANY MATERIAL RETAINED ON-SITE FOR MORE THAN 30 DAYS SHALL BE STORED IN CONTAINERS APPROVED BY THE ENGINEER AND CITY OF DELRAY BEACH.

4. PROTECTION - THE CONTRACTOR SHALL BE RESPONSIBLE TO PROTECT ALL EXISTING BUILDINGS, UTILITIES, STRUCTURES THAT ARE ABOVE OR BELOW GROUND AND SHALL HOLD THE ENGINEER AND OWNER HARMLESS AGAINST ALL CLAIMS OR DAMAGES.

5. LANDSCAPED AREAS - ALL LANDSCAPE PLANTING AREAS SHALL BE FREE OF BASE ROCK AND CONSTRUCTION DEBRIS AND EXCAVATED TO A MINIMUM DEPTH OF 30" OR TO CLEAN, NATIVE SOIL. REFER TO THE LANDSCAPE PLANS (BY OTHERS) FOR ADDITIONAL PLANTING INFORMATION AND DETAILS.

6. MUCK - ANY MUCK ENCOUNTERED WITHIN 10' OF THE PAVEMENT AND BUILDING AREAS SHALL BE REMOVED AND REPLACED WITH CLEAN FILL MATERIAL.

7. HARDPAN - HARDPAN ENCOUNTERED IN THE DETENTION AREA SHALL BE REMOVED AND REPLACED WITH CLEAN, GRANULAR FILL MATERIAL.

PAVING AND DRAINAGE

1. SUBGRADE - SUBGRADE SHALL BE COMPACTED TO 98% MAXIMUM DENSITY IN ACCORDANCE WITH AASHTO T-180 (ASTM-D1557) SPECIFICATIONS. ALL STUMPS, ROOTS, AND OTHER DELETERIOUS MATERIAL ENCOUNTERED SHALL BE REMOVED TO A DEPTH OF 30" BELOW FINISHED ROAD GRADE AND REPLACED WITH CLEAN FILL COMPACTED TO NOT LESS THAN 100% OF MAXIMUM DENSITY. ALL SUCH MATERIAL SHALL BE REMOVED FROM WITHIN 8 FEET OF THE EDGE OF PAVEMENT. STABILIZED SUBGRADE SHALL CONFORM TO SECTION 160 OF FDOT SPECIFICATIONS FOR ROAD AND BRIDGE CONSTRUCTION AND HAVE A MINIMUM LBR OF 40.

2. BASE - APPROVED SHELLROCK AND LIMEROCK SHALL CONFORM TO APPLICABLE PARTS OF SECTIONS 285 OF THE CURRENT FDOT SPECIFICATIONS. BASE COURSE SHALL BE COMPACTED TO 98% OF THE MAXIMUM DENSITY AS DETERMINED BY AASHTO T-180 (ASTM-D1557). PRIME COAT MINIMUM APPLICATION RATE OF 0.10 GAL/S.Y. TACK COAT MINIMUM APPLICATION RATE OF 0.05 GAL/SY.

3. ASPHALT CONCRETE - STRUCTURAL AND SURFACE COURSES SHALL CONFORM TO APPLICABLE SECTIONS 300 THROUGH 341 OF THE CURRENT FDOT SPECIFICATIONS.

4. STRUCTURES - INLETS AND MANHOLES SHALL BE AS SPECIFIED ON THE PLANS AND SHALL BE CONSTRUCTED IN ACCORDANCE WITH APPLICABLE SECTIONS OF THE CURRENT FDOT SPECIFICATIONS. INLET GRATES SHALL BE SECURED IN ACCORDANCE WITH FDOT INDEX NO 201.

5. PIPES - DRAINAGE PIPES SHALL CONFORM WITH THE APPLICABLE SECTIONS OF THE CURRENT FDOT SPECIFICATIONS.

6. REINFORCING STEEL - ALL REINFORCING STEEL SHALL CONFORM TO ASTM A- 615 SPECIFICATIONS.

7. CONCRETE - CONCRETE SHALL DEVELOP A 28-DAY MINIMUM COMPRESSIVE STRENGTH OF 3,000 PSI UNLESS OTHERWISE NOTED ON THE PLANS AND SHALL CONFORM TO THE APPLICABLE SECTIONS OF THE CURRENT FDOT SPECIFICATIONS.

8. PIPE BACKFILL - PIPE BACKFILL SHALL CONFORM TO THE APPLICABLE SECTIONS OF THE CURRENT FDOT SPECIFICATIONS. PIPE BACKFILL SHALL BE PLACED IN 6" LIFTS AND COMPACTED TO NOT LESS THAN 100% MAXIMUM DENSITY AS DEFINED BY AASHTO T-180.

9. TRAFFIC CONTROL DEVICES - ALL TRAFFIC CONTROL DEVICES, PAVEMENT MARKINGS AND SIGNS SHALL BE AS DEFINED IN THE MANUAL ON UNIFORM TRAFFIC CONTROL DEVICES FOR STREETS AND HIGHWAYS (MUTCD), PALM BEACH COUNTY TYPICAL #T-P-18 AND/OR THE CURRENT FDOT SPECIFICATIONS, WHERE APPLICABLE. THERMOPLASTIC MATERIAL SHALL BE USED FOR FINAL PAVEMENT MARKINGS EXCEPT PARKING SPACES. IF PAVER BRICKS ARE USED IN MARKED PAVEMENT, BRICKS OF APPROPRIATE COLOR AND CONTRAST SHALL BE USED IN LIEU OF PAINT OR THERMOPLASTIC MATERIAL. PAINT MAY BE USED FOR TEMPORARY STRIPING.

10. WHERE CONNECTIONS TO AN EXISTING DRAINAGE SYSTEM ARE PROPOSED, SAID EXISTING DRAINAGE STRUCTURES AND LINES SHALL BE CLEANED OF ALL SILT AND OTHER DEBRIS PRIOR TO SAID CONNECTIONS BEING MADE, AND WHERE THE EXISTING DRAINAGE SYSTEM INCLUDES DITCHES, SAID DITCHES SHALL BE CLEARED AND REWORKED, AS NECESSARY, TO RESTORE THEM TO AN APPROVED DESIGN SECTION. DRAINAGE SYSTEMS ARE TO BE CLEANED AND/OR GRADED TO THE POINT OF LEGAL POSITIVE OUTFALL.

11. ALL HANDICAP ACCESSIBLE RAMPS SHALL MEET ALL APPLICABLE LOCAL, STATE, AND FEDERAL ACCESSIBILITY GUIDELINES AND REGULATIONS. ANY MODIFICATIONS SHALL BE APPROVED BY THE ENGINEER OF RECORD. HANDICAP PARKING SIGNS SHALL BE PLACED A) BEHIND THE SIDEWALK OR B) ATTACHED TO BUILDING WALLS IN AREAS WHERE A SIDEWALK AND/OR BUILDING ABUTS THE STALL OR C) OUTSIDE THE TWO (2') FEET OVERHANG AREA WHERE WHEEL STOPS ARE NOT PROVIDED.

FIELD OBSERVATIONS AND TESTING

1. ALL WORK IS OPEN AND SUBJECT TO INSPECTION BY ENGINEER AND THE CITY OF DELRAY BEACH.

2. NOTIFICATION - THE CONTRACTOR SHALL NOTIFY THE ENGINEER, GOVERNMENT AND OTHER PERMITTING AGENCIES 48 HOURS PRIOR TO SCHEDULING FIELD OBSERVATIONS AND SHALL SUPPLY ALL EQUIPMENT NECESSARY TO TEST THE COMPLETED WORK. CALL "SUNSHINE ONE CALL" AT 1-800-432-4770 PRIOR TO ANY EXCAVATION.

3. THE UNDERGROUND CONTRACTOR SHALL SUBMIT ALL RECORD DATA, SIGNED AND SEALED BY A PROFESSIONAL SURVEYOR AND MAPPER REGISTERED IN THE STATE OF FLORIDA, TO THE ENGINEER FOR REVIEW AND APPROVAL PRIOR TO CURB AND PAVEMENT CONSTRUCTION. ANY NECESSARY ADJUSTMENTS AT THIS TIME SHALL BE THE RESPONSIBILITY OF THE CONTRACTOR.

4. DRAINAGE PIPES AND STRUCTURES SHALL BE INSPECTED BY THE ENGINEER PRIOR TO BACKFILLING. ALL DRAINAGE SYSTEMS SHALL BE PUMPED DOWN TO BELOW THE INVERT AND LAMPED AS A REQUIREMENT OF THE FINAL DRAINAGE INSPECTION.

5. ALL TESTS SHALL BE SIGNED AND SEALED BY A PROFESSIONAL ENGINEER REGISTERED IN THE STATE OF FLORIDA AND ARE TO BE PAID FOR BY THE CONTRACTOR.

6. THE BASE ROCK CHEMICAL AND SIEVE ANALYSIS AND THE ASPHALT MIX AND DESIGN CRITERIA SHALL BE SUBMITTED TO THE ENGINEER FOR REVIEW PRIOR TO CONSTRUCTION.

7. PROCTOR AND DENSITY TESTS FOR SUBGRADE AND BASE MATERIAL SHALL BE TAKEN AS DIRECTED BY THE ENGINEER. PAVING DENSITY TESTS SHALL BE TAKEN A MINIMUM OF ONE PER 500 S.Y.

8. DENSITY TEST FOR PIPE TRENCHES SHALL BE TAKEN AT THE PIPE SPRING-LINE AND AT MAXIMUM ONE FOOT (1') LIFTS AS MEASURED FROM THE TOP OF PIPE. THE TESTS SHALL BE TAKEN AT A MAXIMUM SPACING OF EVERY 300 FEET MEASURED FROM THE STRUCTURE OR AT LEAST ONE TEST AT THE CENTER OF THE PIPE SEGMENT BETWEEN TWO STRUCTURES IF LESS THEN 300 FEET. TESTS SHALL BE TAKEN ON ALL SIDES WITHIN FIVE (5') OF EACH STRUCTURE. THE TEST LOCATION AT THE STRUCTURE SHALL BE ON ALTERNATING SIDES OF THE STRUCTURE WITH EACH LIFT TESTED. THE LOCATION AND DEPTH OF ALL TESTS SHALL BE CLEARLY INDICATED IN THE DESCRIPTION AREA ON THE TEST REPORT OR ILLUSTRATED IN A MAP.

9. TESTING - TEST RESULTS SHALL BE SUBMITTED TO THE ENGINEER FOR REVIEW AND APPROVAL. TESTING REQUIREMENTS SHALL INCLUDE, BUT MAY NOT BE LIMITED TO, BACKFILL DENSITY, PIPELINE INTEGRITY (HYDROSTATIC PRESSURE) AND ANY OTHERS REQUIRED BY THE ENGINEER, PBCWUD OR PERMITTING AGENCIES.

SITE ELECTRIC NOTES

1. ALL STREET LIGHTING LOCATED WITHIN PROPERTY WILL BE OWNED AND MAINTAINED BY THE PROPERTY OWNER.

ABBREVIATIONS

BFP	BACKFLOW PREVENTER
BLDG	BUILDING
BOT	BOTTOM OF PIPE
BV	BUTTERFLY VALVE
CAP	CORRUGATED ALUMINUM PIPE
CO	CLEANOUT
CR	CURB RAMP
CS	CONTROL STRUCTURE
DBO	DESIGNED BY OTHERS
DCDA	DOUBLE CHECK DETECTOR ASSEMBLY
DIP	DUCTILE IRON PIPE
EL	ELEVATION
EX	EXISTING
FDC	FIRE DEPARTMENT CONNECTION
FF	FINISHED FLOOR
FH	FIRE HYDRANT
FL	FLANGE
FM	FORCE MAIN
GR	GRATE ELEVATION
GV	GATE VALVE
HC	HANDICAP ACCESSIBLE RAMP
HDPE	HIGH DENSITY POLYETHLENE PIPE
HP	HIGH POINT
I	INLET
INV	INVERT
LME	LAKE MAINTENANCE EASEMENT
MH	MANHOLE
NAD	NORTH AMERICAN DATUM
NGVD	NATIONAL GEODETIC VERTICAL DATUM
PBC	PALM BEACH COUNTY
PBCHD	PALM BEACH COUNTY HEALTH DEPARTMENT
PBCWUD	PALM BEACH COUNTY WATER UTILITIES DEPARTMENT
PVC	POLYVINLY CHLORIDE
P/L	PROPERTY LINE
RCP	REINFORCED CONCRETE PIPE
RED	REDUCER
R/W	RIGHT OF WAY
RPZ	REDUCED PRESSURE ZONE
SW	SIDEWALK
SAN	SANITARY SEWER
SP	SAMPLE POINT
STM	STORM SEWER
SW	SIDEWALK
TOB	TOP OF BANK
TOP	TOP, TOP OF PIPE
TYP	TYPICAL
UE	UTILITY EASEMENT
YD	YARD DRAIN
WM	WATER MAIN

WGI®
2035 Vista Parkway, West Palm Beach, FL 33411
Phone No. 866.909.2220 www.wginc.com
Cert No. 6091 - LB No. 7055

REVISIONS

NO.	DATE	DESCRIPTION	BY

CAD	422400-CV-COV.DWG
JOB NO.	4224.00
DRAWN BY	GAT
CHECK BY	CJH
DATE	7-16-19

ENGINEER OF RECORD
CHRISTOPHER J. HOLMES, PE
PE# 66344

HARBOUR'S EDGE PARKING IMPROVEMENTS

GENERAL NOTES

SHEET:
C1.0

Grace Turner C:\pwworking\wgi\grace.turner\d1516926\422400-CV-COV.dwg ---- Plotted: 9/18/2019 9:07:53 AM Saved: 8/29/2019 8:49:09 AM

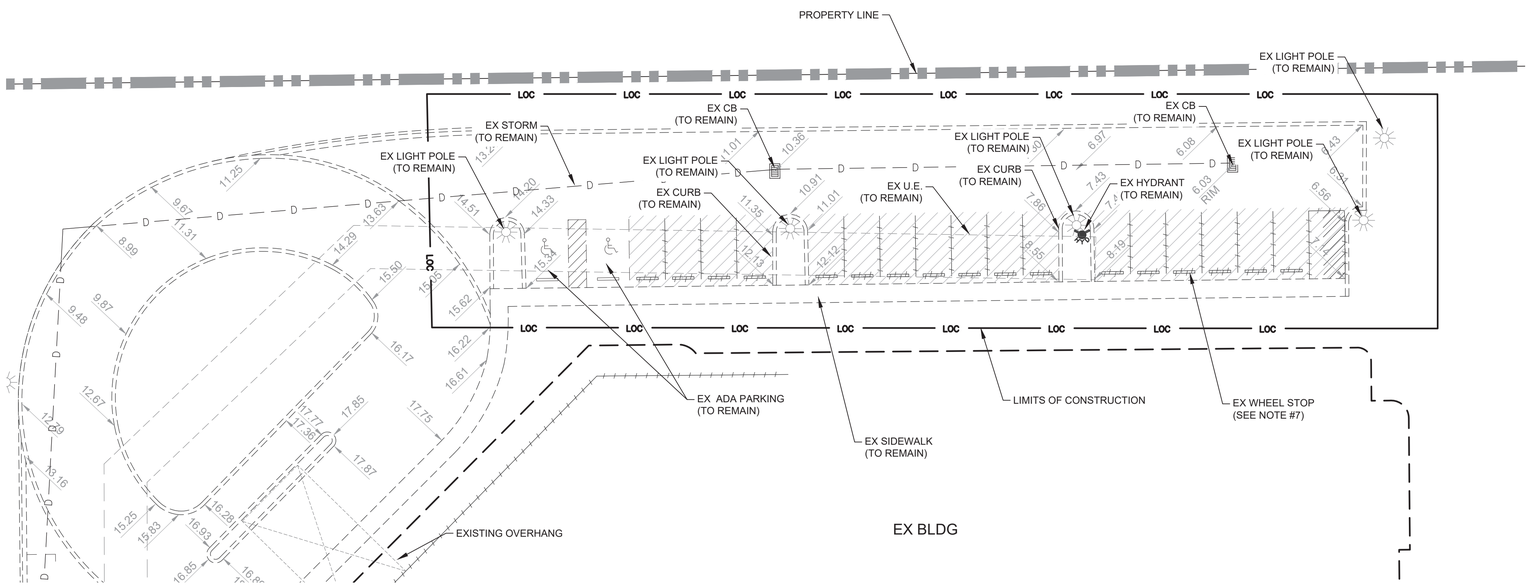

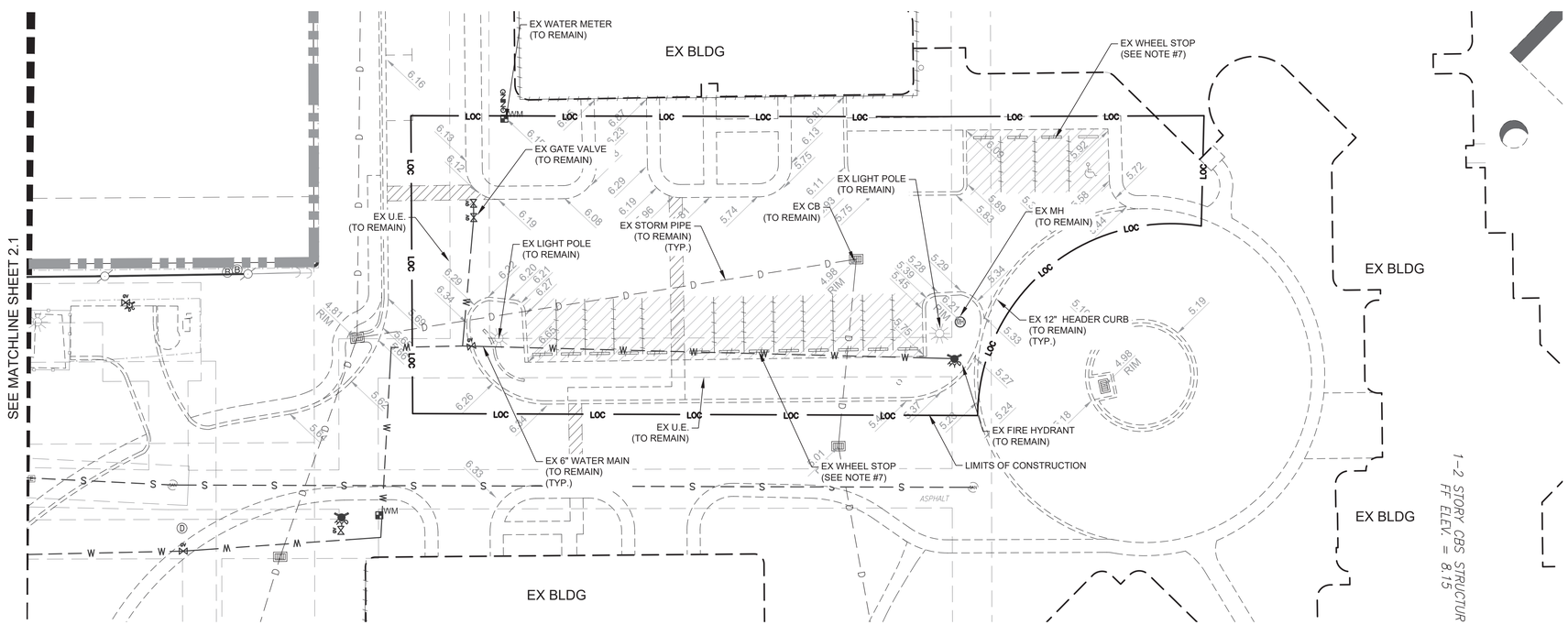

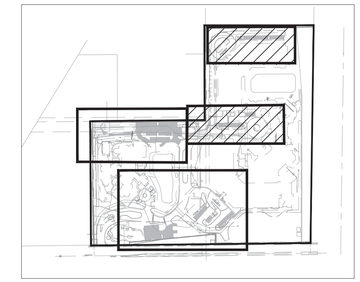

KEY MAP

NTS

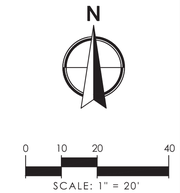

LEGEND

LIMITS OF CONSTRUCTION	LOC
EXISTING CATCH BASIN	
SANITARY MANHOLE	SAN
EXISTING FIRE HYDRANT	
WATER METER / VALVE	
BELL SOUTH	B
EXISTING GROUND ELEVATION	9.23
LIGHT POLE	
TO BE REMOVED	
LIMITS OF CLEARING REMOVE UNLESS OTHER WISE SPECIFIED: ASPHALT, PAVEMENT, CURBING, WHEEL STOPS, UNSUITABLE MATERIAL	
LIMITS OF ASPHALT MILLING & RESURFACING	

NOTE

1. ALL DEMOLITION ACTIVITY TO OCCUR STRICTLY WITHIN LIMITS OF CONSTRUCTION.
2. THE LOCATION OF EXISTING UTILITIES SHOWN ON THESE PLANS HAVE BEEN DETERMINED FROM THE BEST INFORMATION AVAILABLE AND ARE GIVEN FOR THE CONVENIENCE OF THE CONTRACTOR. THE ENGINEER ASSUMES NO RESPONSIBILITY FOR THEIR ACCURACY. PRIOR TO THE START OF ANY DEMOLITION ACTIVITY, THE CONTRACTOR SHALL NOTIFY THE UTILITY COMPANIES FOR ON-SITE LOCATIONS OF EXISTING UTILITIES.
3. ELEVATIONS ARE BASED ON NORTH AMERICAN VERTICAL DATUM OF 1988 (NAVD 88).
4. REFER TO LANDSCAPE PLANS FOR TREE REMOVAL OR RELOCATION INFORMATION.
5. REFER TO ELECTRICAL PLAN FOR SITE ELECTRIC REMOVAL/RELOCATION INFORMATION.
6. ALL LIGHT POLES, FIRE HYDRANTS, AND STORM/SANITARY STRUCTURES ARE TO REMAIN UNLESS OTHERWISE SPECIFIED.
7. CONTRACTOR SHALL REMOVE, PROTECT, AND RE-USE EXISTING CONCRETE WHEEL STOPS WITHIN LIMITS OF ASPHALT MILLING AND RESURFACING. ALL DAMAGED WHEEL STOPS SHALL BE REPLACED.
8. CONTRACTOR SHALL REMOVE, PROTECT, AND RE-INSTALL ADA PARKING SIGN WITHIN LIMITS OF CONSTRUCTION AS NECESSARY.

811 Know what's below. Call before you dig.

WGI
2035 Vista Parkway, West Palm Beach, FL 33411
Phone No. 866.909.2220 www.wgiinc.com
Cert No. 6091 - LB No. 7055

REVISIONS

NO.	DATE	DESCRIPTION	BY

CAD 422400-CV-DEM.DWG	
JOB NO.	4224.00
DRAWN BY	GAT
CHECK BY	CJH
DATE	7-16-19

ENGINEER OF RECORD
CHRISTOPHER J. HOLMES, PE
PE# 66344

HARBOUR'S EDGE PARKING IMPROVEMENTS

SITE DEMOLITION PLAN

SHEET:
C2.0

Grace Turner C:\pwworking\gregraces\d0158506\422400-CV-DEM.dwg — Plotted: 8/19/2019 9:09:09 AM Saved: 8/20/2019 10:45:40 AM

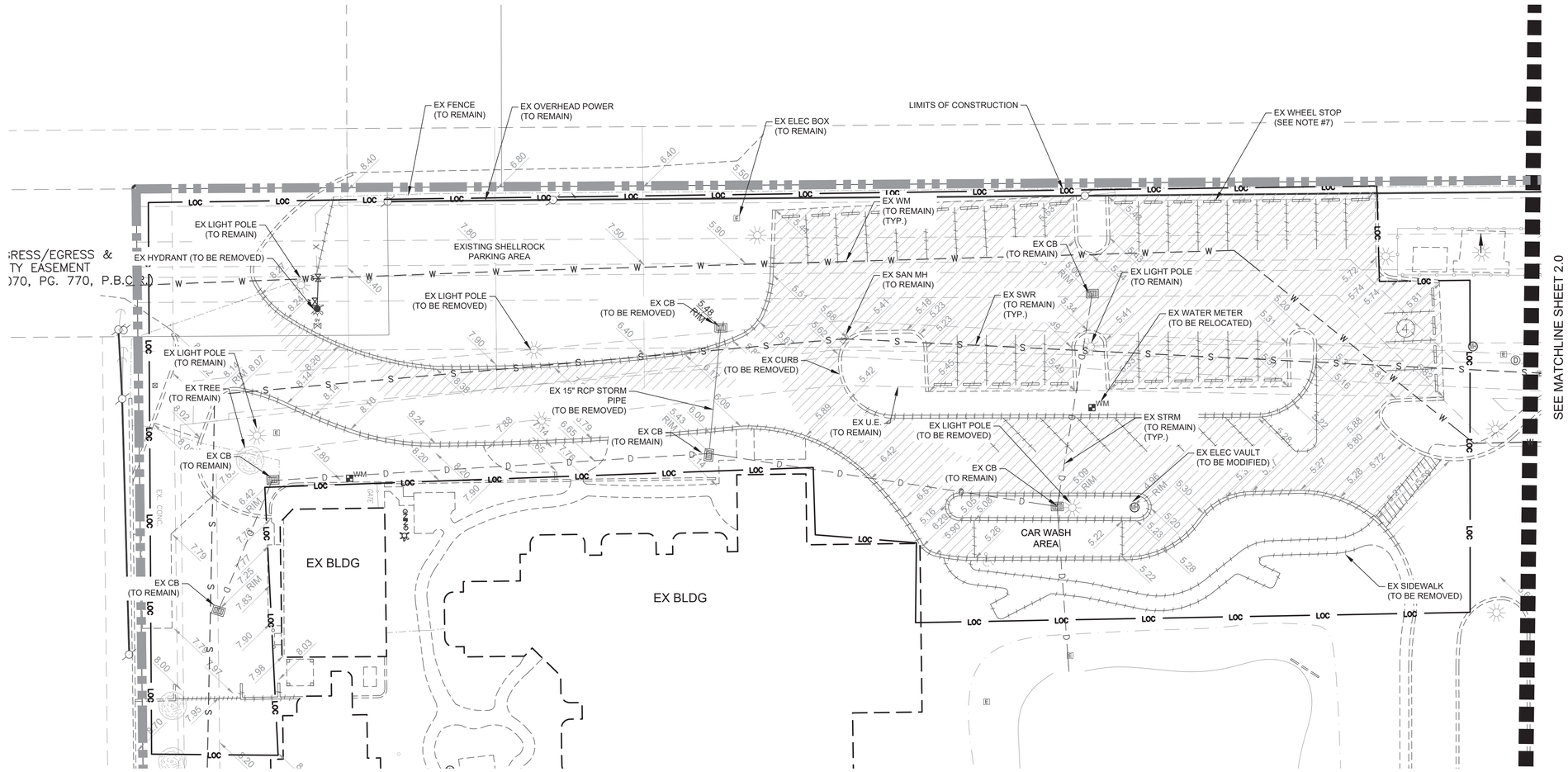

NOTE

1. ALL DEMOLITION ACTIVITY TO OCCUR STRICTLY WITHIN LIMITS OF CONSTRUCTION.
2. THE LOCATION OF EXISTING UTILITIES SHOWN ON THESE PLANS HAVE BEEN DETERMINED FROM THE BEST INFORMATION AVAILABLE AND ARE GIVEN FOR THE CONVENIENCE OF THE CONTRACTOR. THE ENGINEER ASSUMES NO RESPONSIBILITY FOR THEIR ACCURACY. PRIOR TO THE START OF ANY DEMOLITION ACTIVITY, THE CONTRACTOR SHALL NOTIFY THE UTILITY COMPANIES FOR ON-SITE LOCATIONS OF EXISTING UTILITIES.
3. ELEVATIONS ARE BASED ON NORTH AMERICAN VERTICAL DATUM OF 1988 (NAVD 88).
4. REFER TO LANDSCAPE PLANS FOR TREE REMOVAL OR RELOCATION INFORMATION.
5. REFER TO ELECTRICAL PLAN FOR SITE ELECTRIC REMOVAL/RELOCATION INFORMATION.
6. ALL LIGHT POLES, FIRE HYDRANTS, AND STORM/SANITARY STRUCTURES ARE TO REMAIN UNLESS OTHERWISE SPECIFIED.
7. CONTRACTOR SHALL REMOVE, PROTECT, AND RE-USE EXISTING CONCRETE WHEEL STOPS WITHIN LIMITS OF ASPHALT MILLING AND RESURFACING. ALL DAMAGED WHEEL STOPS SHALL BE REPLACED.
8. CONTRACTOR SHALL REMOVE, PROTECT, AND RE-INSTALL ADA PARKING SIGN WITHIN LIMITS OF CONSTRUCTION AS NECESSARY.

LEGEND

LIMITS OF CONSTRUCTION	LOC
EXISTING CATCH BASIN	
SANITARY MANHOLE	SAN
EXISTING FIRE HYDRANT	
WATER METER / VALVE	WM
BELL SOUTH	B
EXISTING GROUND ELEVATION	9.23
LIGHT POLE	
TO BE REMOVED	
LIMITS OF CLEARING REMOVE UNLESS OTHER WISE SPECIFIED: ASPHALT, PAVEMENT, CURBING, WHEEL STOPS, UNSUITABLE MATERIAL	
LIMITS OF ASPHALT MILLING & RESURFACING	

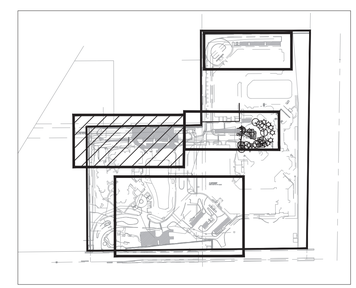

KEY MAP
NTS

811 Know what's below. Call before you dig.

WGI
2035 Vista Parkway, West Palm Beach, FL 33411
Phone No. 866.909.2220 www.wginc.com
Cert No. 6091 - LB No. 7055

NO.	DATE	DESCRIPTION	BY
		REVISIONS	

CAD 422400-CV-DEMD.DWG	
JOB NO.	4224.00
DRAWN BY	GAT
CHECK BY	CJH
DATE	7-16-19

ENGINEER OF RECORD
CHRISTOPHER J. HOLMES, PE
PE# 66344

HARBOUR'S EDGE PARKING IMPROVEMENTS

SITE DEMOLITION PLAN

SHEET:
C2.1

Chris Holmes C:\pwworking\wgi\chris.holmes\d0158\d0242406\C-V-DEM.dwg — Plotted: 8/23/2019 2:42:27 PM Solved: 8/23/2019 10:40:40 AM

NOTE

1. ALL DEMOLITION ACTIVITY TO OCCUR STRICTLY WITHIN LIMITS OF CONSTRUCTION.
2. THE LOCATION OF EXISTING UTILITIES SHOWN ON THESE PLANS HAVE BEEN DETERMINED FROM THE BEST INFORMATION AVAILABLE AND ARE GIVEN FOR THE CONVENIENCE OF THE CONTRACTOR. THE ENGINEER ASSUMES NO RESPONSIBILITY FOR THEIR ACCURACY. PRIOR TO THE START OF ANY DEMOLITION ACTIVITY, THE CONTRACTOR SHALL NOTIFY THE UTILITY COMPANIES FOR ON-SITE LOCATIONS OF EXISTING UTILITIES.
3. ELEVATIONS ARE BASED ON NORTH AMERICAN VERTICAL DATUM OF 1988 (NAVD 88).
4. REFER TO LANDSCAPE PLANS FOR TREE REMOVAL OR RELOCATION INFORMATION.
5. REFER TO ELECTRICAL PLAN FOR SITE ELECTRIC REMOVAL/RELOCATION INFORMATION.
6. ALL LIGHT POLES, FIRE HYDRANTS, AND STORM/SANITARY STRUCTURES ARE TO REMAIN UNLESS OTHERWISE SPECIFIED.
7. CONTRACTOR SHALL REMOVE, PROTECT, AND RE-USE EXISTING CONCRETE WHEEL STOPS WITHIN LIMITS OF ASPHALT MILLING AND RESURFACING. ALL DAMAGED WHEEL STOPS SHALL BE REPLACED.
8. CONTRACTOR SHALL REMOVE, PROTECT, AND RE-INSTALL ADA PARKING SIGN WITHIN LIMITS OF CONSTRUCTION AS NECESSARY.

LEGEND

- LIMITS OF CONSTRUCTION — LOC
- EXISTING CATCH BASIN
- SANITARY MANHOLE (SAN)
- EXISTING FIRE HYDRANT
- WATER METER / VALVE (BV)
- BELL SOUTH (B)
- EXISTING GROUND ELEVATION 9.23
- LIGHT POLE
- TO BE REMOVED
- LIMITS OF CLEARING REMOVE UNLESS OTHER WISE SPECIFIED: ASPHALT, PAVEMENT, CURBING, WHEEL STOPS, UNSUITABLE MATERIAL
- LIMITS OF ASPHALT MILLING & RESURFACING

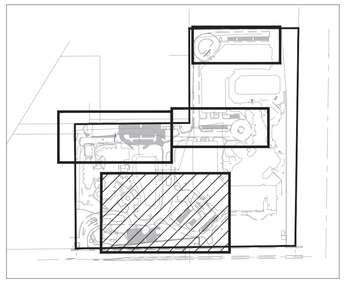

KEY MAP

NTS

N

0 10 20 40

SCALE: 1" = 20'

811 Know what's below. Call before you dig.

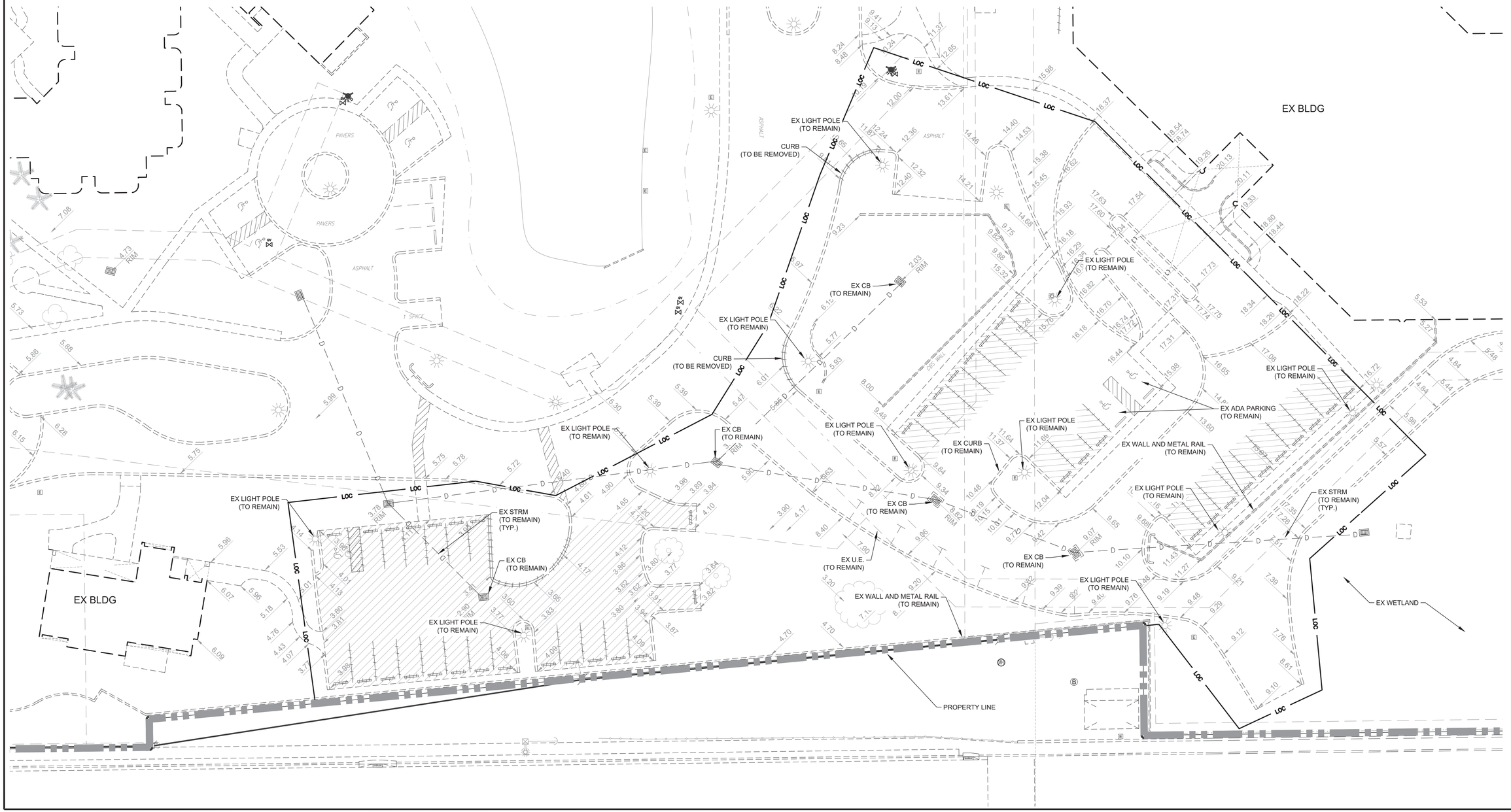

WGL
2035 Vista Parkway, West Palm Beach, FL 33411
Phone No. 866.909.2220 www.wglinc.com
Cert No. 6091 - LB No. 7055

NO.	DATE	DESCRIPTION	BY
		REVISIONS	

CAD 4224OCV-DEMDWG	
JOB NO.	4224.00
DRAWN BY	GAT
CHECK BY	CJH
DATE	7-16-19

ENGINEER OF RECORD
CHRISTOPHER J. HOLMES, PE
PE# 66344

HARBOUR'S EDGE PARKING IMPROVEMENTS

SITE DEMOLITION PLAN

SHEET:
C2.2

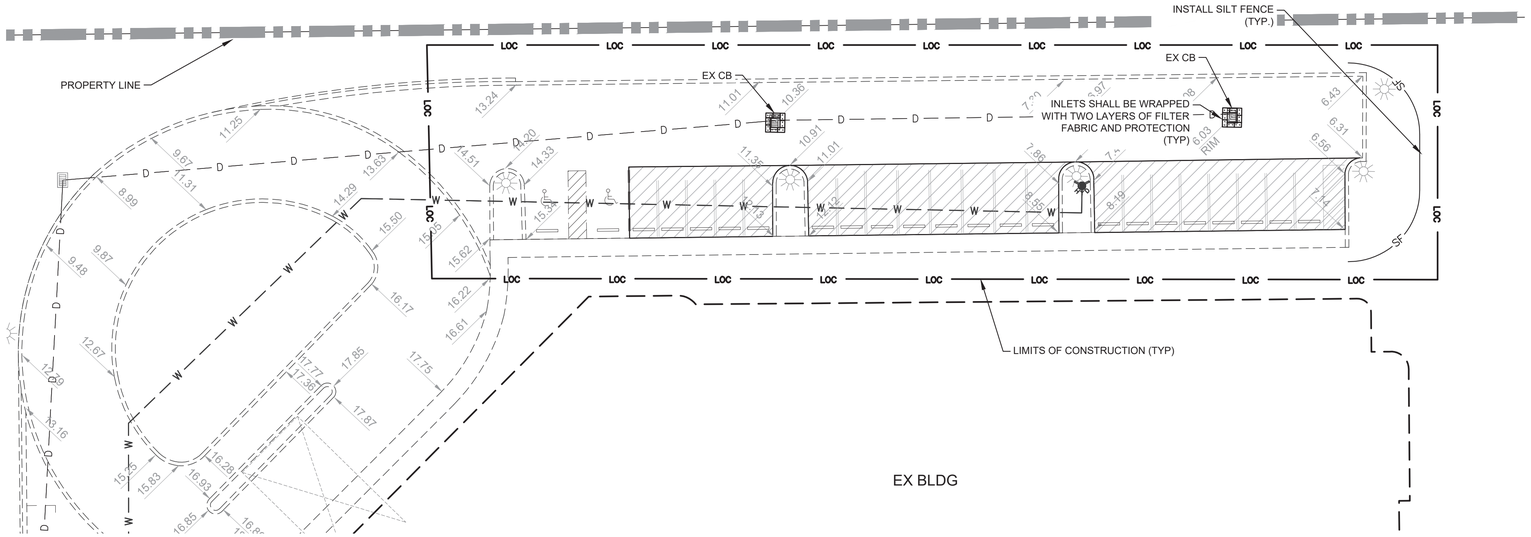

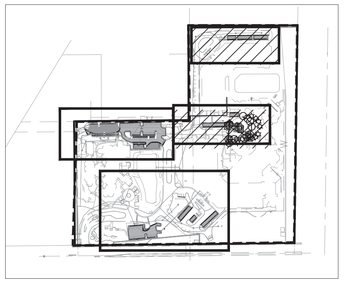

KEY MAP

NTS

N

0 10 20 40

SCALE: 1" = 20'

LEGEND

LIMITS OF CONSTRUCTION	LOC
CONCRETE PAVEMENT	
ASPHALT PAVEMENT	
LIMITS OF ASPHALT MILLING & RESURFACING	
PROPOSED WATER MAIN	W
PROPOSED DRAINAGE PIPE	D
EXISTING DRAINAGE PIPE	D
DRAINAGE STRUCTURE	
EXISTING LIGHT POLE	
	SF
INLET PROTECTION	
EXISTING DRAINAGE STRUCTURE	

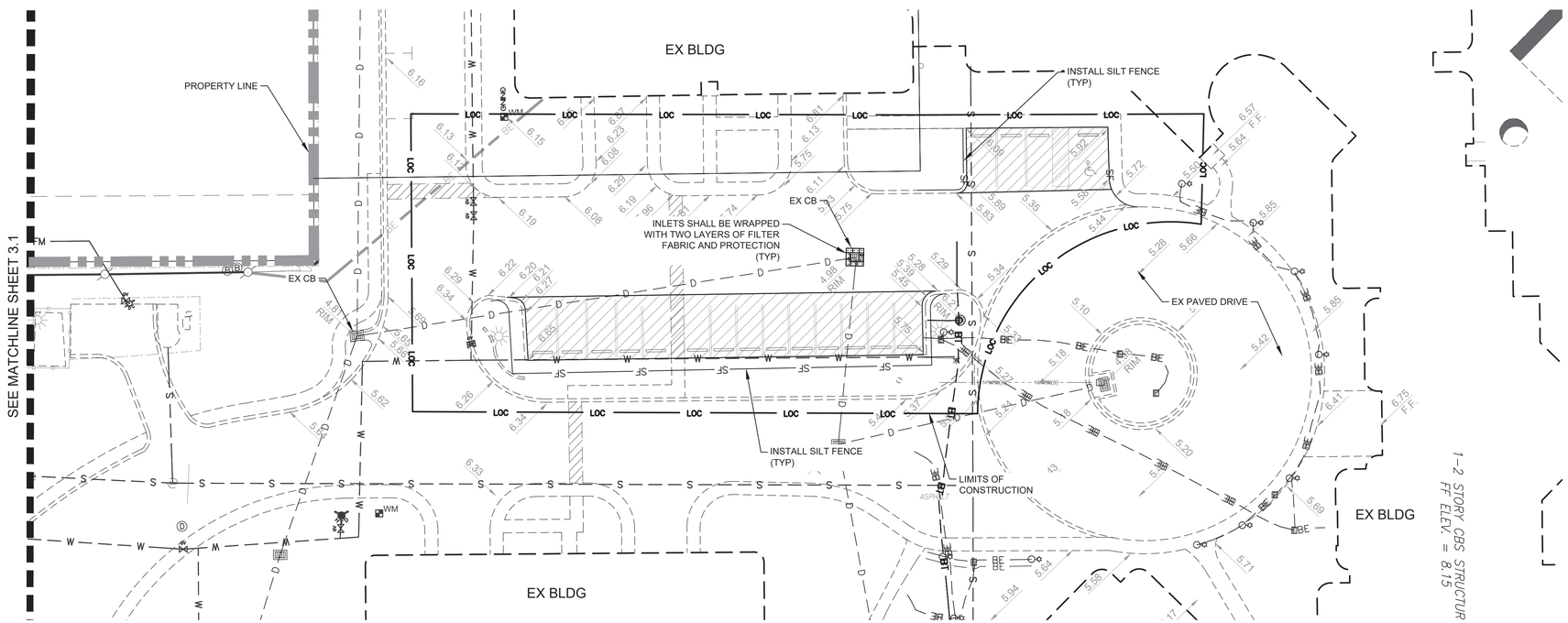

NOTE

1. SWPPP CONTROLS ARE SHOWN IN CONCEPTUAL LOCATIONS AND MAY BE SYMBOLIC IN SIZE DUE TO THE SCALE OF THE DRAWING, ACTUAL CONDITIONS AND LOCATION OF CONSTRUCTION ACCESS POINTS. CONTROLS SHALL BE INSTALLED ACCORDING TO THE DETAILS AND SPECIFICATIONS AND AS DIRECTED BY THE COUNTY OR ENGINEER.
2. PORTABLE TOILETS, FUEL STATIONS, AND OTHER SOURCES OF POTENTIAL POLLUTION SHALL HAVE BERMS CONSTRUCTED AROUND THEM TO PREVENT DIRECT SURFACE FLOW INTO STORM SEWERS AND LAKES.
3. DO NOT CONSTRUCT SILT FENCES ACROSS PERMANENT FLOWING WATER COURSES. SILT FENCE TO BE AT UPLAND LOCATIONS AND TURBIDITY BARRIERS USED AT PERMANENT BODIES OF WATER.
4. REFER TO SHEET C5.0 AND C5.1 FOR SWPPP DETAILS.

WGI®
2035 Vista Parkway, West Palm Beach, FL 33411
Phone No. 866.909.2220 www.wginc.com
Cert No. 6091 - LB No. 7055

NO.	DATE	DESCRIPTION	BY

REVISIONS

CAD 4224\00-CV-SWPP.DWG	
JOB NO.	4224.00
DRAWN BY	GAT
CHECK BY	CJH
DATE	7-16-19

ENGINEER OF RECORD
CHRISTOPHER J. HOLMES, PE
PE# 66344

HARBOUR'S EDGE PARKING IMPROVEMENTS

STORMWATER POLLUTION PREVENTION PLAN

SHEET:

C3.0

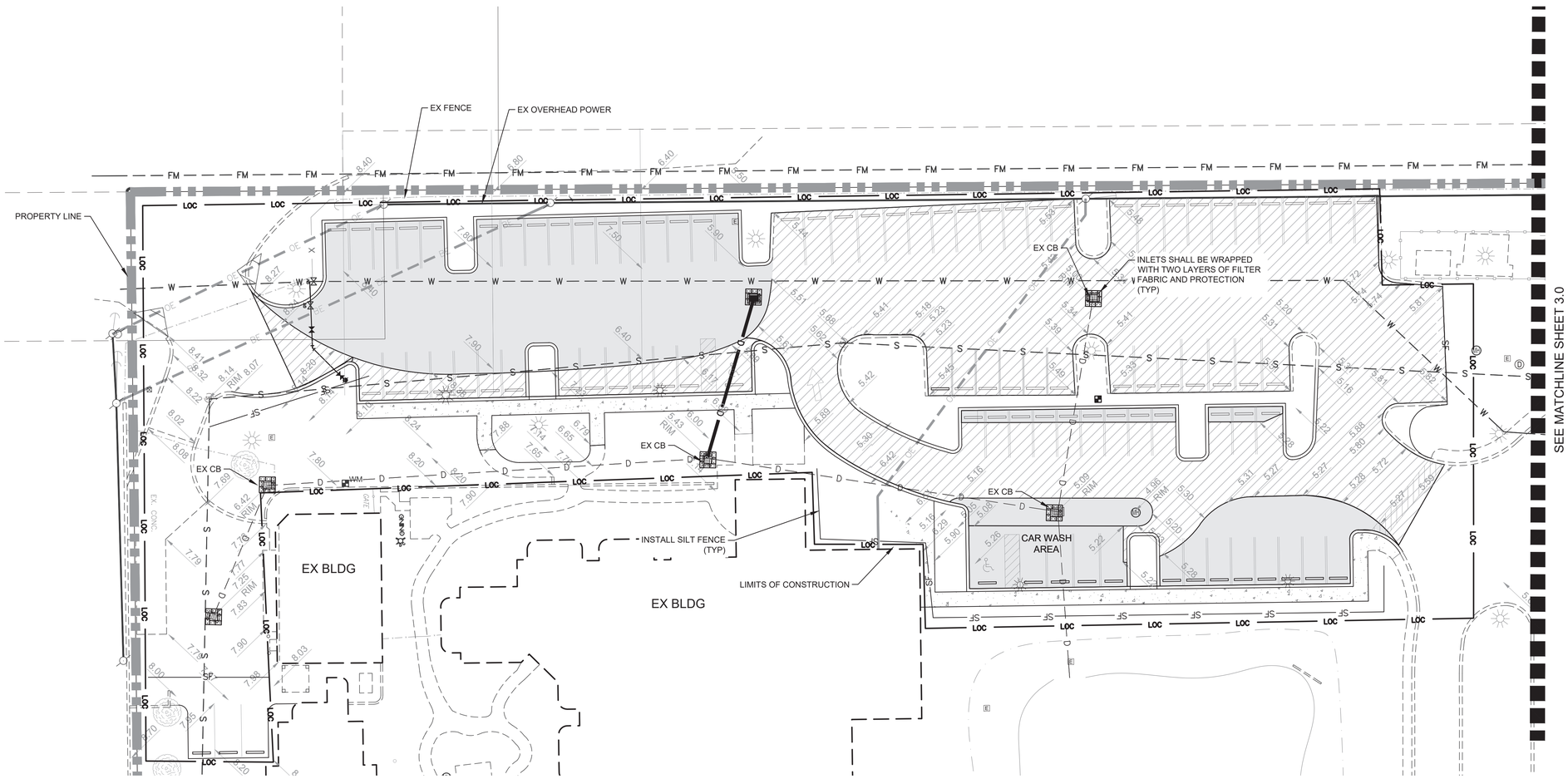

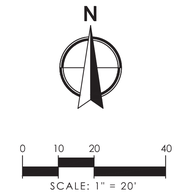

LEGEND

LIMITS OF CONSTRUCTION	LOC
CONCRETE PAVEMENT	
ASPHALT PAVEMENT	
LIMITS OF ASPHALT MILLING & RESURFACING	
PROPOSED WATER MAIN	W
PROPOSED DRAINAGE PIPE	D
EXISTING DRAINAGE PIPE	D
DRAINAGE STRUCTURE	
EXISTING LIGHT POLE	
INLET PROTECTION	SF
EXISTING DRAINAGE STRUCTURE	

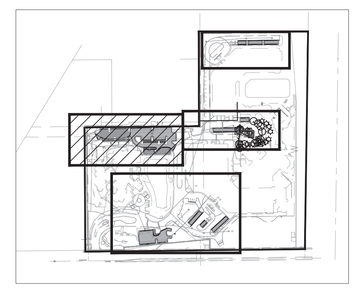

KEY MAP
NTS

NOTE

1. SWPPP CONTROLS ARE SHOWN IN CONCEPTUAL LOCATIONS AND MAY BE SYMBOLIC IN SIZE DUE TO THE SCALE OF THE DRAWING, ACTUAL CONDITIONS AND LOCATION OF CONSTRUCTION ACCESS POINTS. CONTROLS SHALL BE INSTALLED ACCORDING TO THE DETAILS AND SPECIFICATIONS AND AS DIRECTED BY THE COUNTY OR ENGINEER.
2. PORTABLE TOILETS, FUEL STATIONS, AND OTHER SOURCES OF POTENTIAL POLLUTION SHALL HAVE BERMS CONSTRUCTED AROUND THEM TO PREVENT DIRECT SURFACE FLOW INTO STORM SEWERS AND LAKES.
3. DO NOT CONSTRUCT SILT FENCES ACROSS PERMANENT FLOWING WATER COURSES. SILT FENCE TO BE AT UPLAND LOCATIONS AND TURBIDITY BARRIERS USED AT PERMANENT BODIES OF WATER.
4. REFER TO SHEET C5.0 AND C5.1 FOR SWPPP DETAILS.

WGI
2035 Vista Parkway, West Palm Beach, FL 33411
Phone No. 866.909.2220 www.wgiinc.com
Cert No. 6091 - LB No. 7055

NO.	DATE	DESCRIPTION	BY
		REVISIONS	

CAD 4224/00-CV-SWPP.DWG	
JOB NO.	4224.00
DRAWN BY	GAT
CHECK BY	CJH
DATE	7-16-19

ENGINEER OF RECORD
CHRISTOPHER J. HOLMES, PE
PE# 66344

HARBOUR'S EDGE PARKING IMPROVEMENTS

STORMWATER POLLUTION PREVENTION PLAN

SHEET:
C3.1

Chris Holmes C:\pwworking\gridinfo\chholmes\d0150026\4224\00-C3-SWPP.dwg — Plotted: 8/24/2019 10:24:16 AM Saved: 8/18/2019 9:10:23 AM

NOTE

1. SWPPP CONTROLS ARE SHOWN IN CONCEPTUAL LOCATIONS AND MAY BE SYMBOLIC IN SIZE DUE TO THE SCALE OF THE DRAWING, ACTUAL CONDITIONS AND LOCATION OF CONSTRUCTION ACCESS POINTS. CONTROLS SHALL BE INSTALLED ACCORDING TO THE DETAILS AND SPECIFICATIONS AND AS DIRECTED BY THE COUNTY OR ENGINEER.
2. PORTABLE TOILETS, FUEL STATIONS, AND OTHER SOURCES OF POTENTIAL POLLUTION SHALL HAVE BERMS CONSTRUCTED AROUND THEM TO PREVENT DIRECT SURFACE FLOW INTO STORM SEWERS AND LAKES.
3. DO NOT CONSTRUCT SILT FENCES ACROSS PERMANENT FLOWING WATER COURSES. SILT FENCE TO BE AT UPLAND LOCATIONS AND TURBIDITY BARRIERS USED AT PERMANENT BODIES OF WATER.
4. REFER TO SHEET C5.0 AND C5.1 FOR SWPPP DETAILS.

LEGEND

- LIMITS OF CONSTRUCTION — LOC —
- CONCRETE PAVEMENT
- ASPHALT PAVEMENT
- LIMITS OF ASPHALT MILLING & RESURFACING
- PROPOSED WATER MAIN — W —
- PROPOSED DRAINAGE PIPE
- EXISTING DRAINAGE PIPE — — — D — —
- DRAINAGE STRUCTURE
- EXISTING LIGHT POLE
- — SF —
- INLET PROTECTION
- EXISTING DRAINAGE STRUCTURE

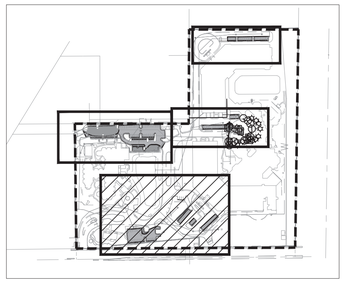

KEY MAP
NTS

N

0 10 20 40
SCALE: 1" = 20'

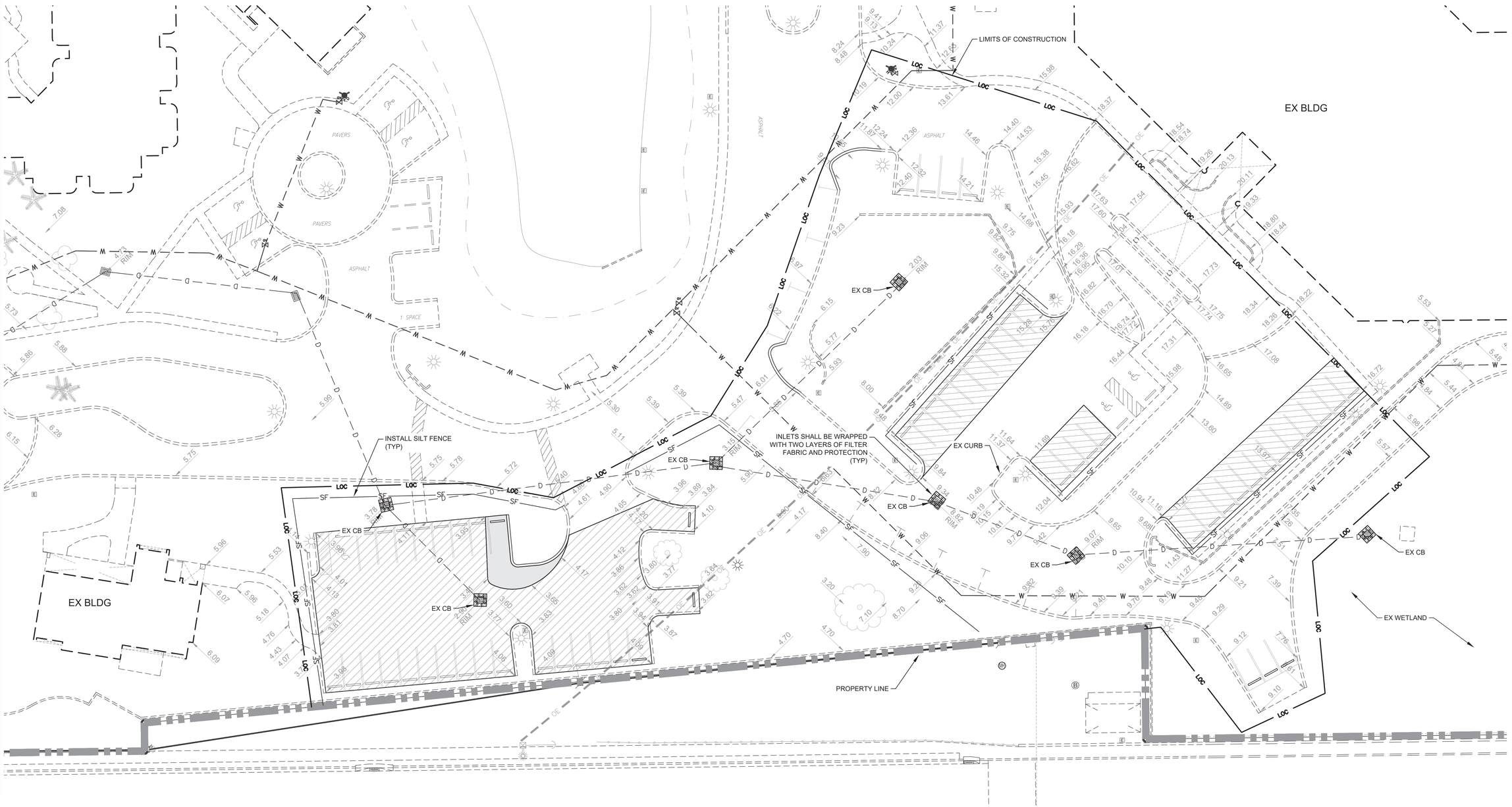

WGI
2035 Vista Parkway, West Palm Beach, FL 33411
Phone No. 866.909.2220 www.wginc.com
Cert No. 6691 - LB No. 7055

NO.	DATE	DESCRIPTION	BY
		REVISIONS	

CAD 4224X0-CV-SWPP.DWG	
JOB NO.	4224.00
DRAWN BY	GAT
CHECK BY	CJH
DATE	7-16-19

ENGINEER OF RECORD
CHRISTOPHER J. HOLMES, PE
PE# 66344

HARBOUR'S EDGE PARKING IMPROVEMENTS

STORMWATER POLLUTION PREVENTION PLAN

SHEET:
C3.2

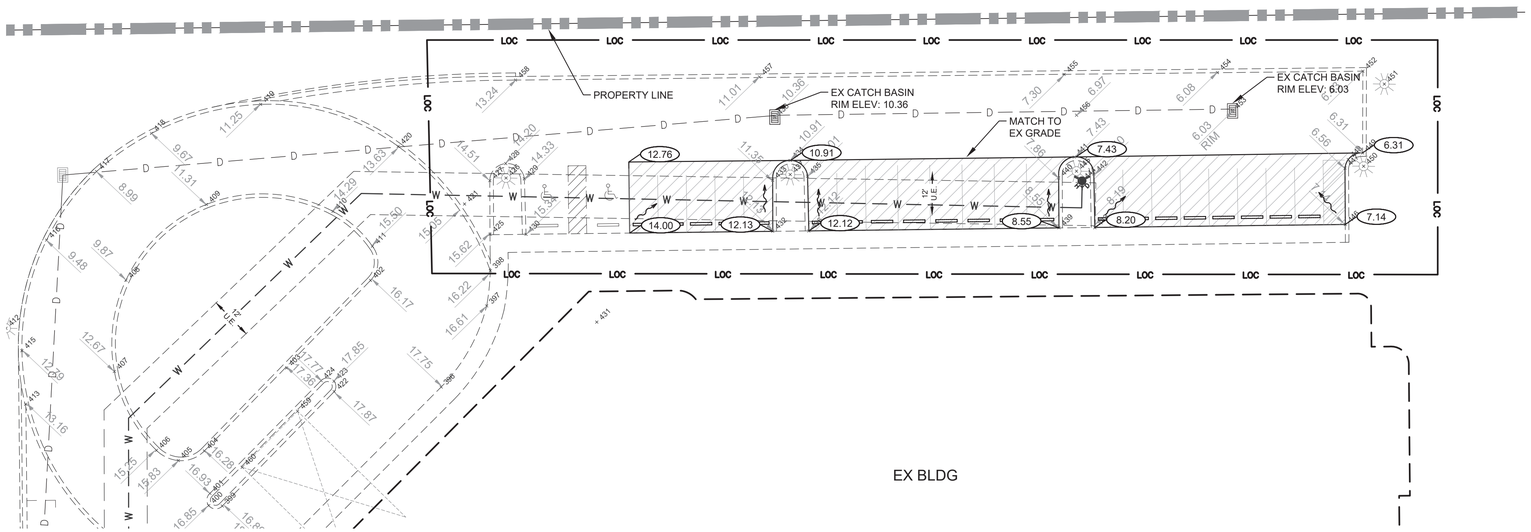

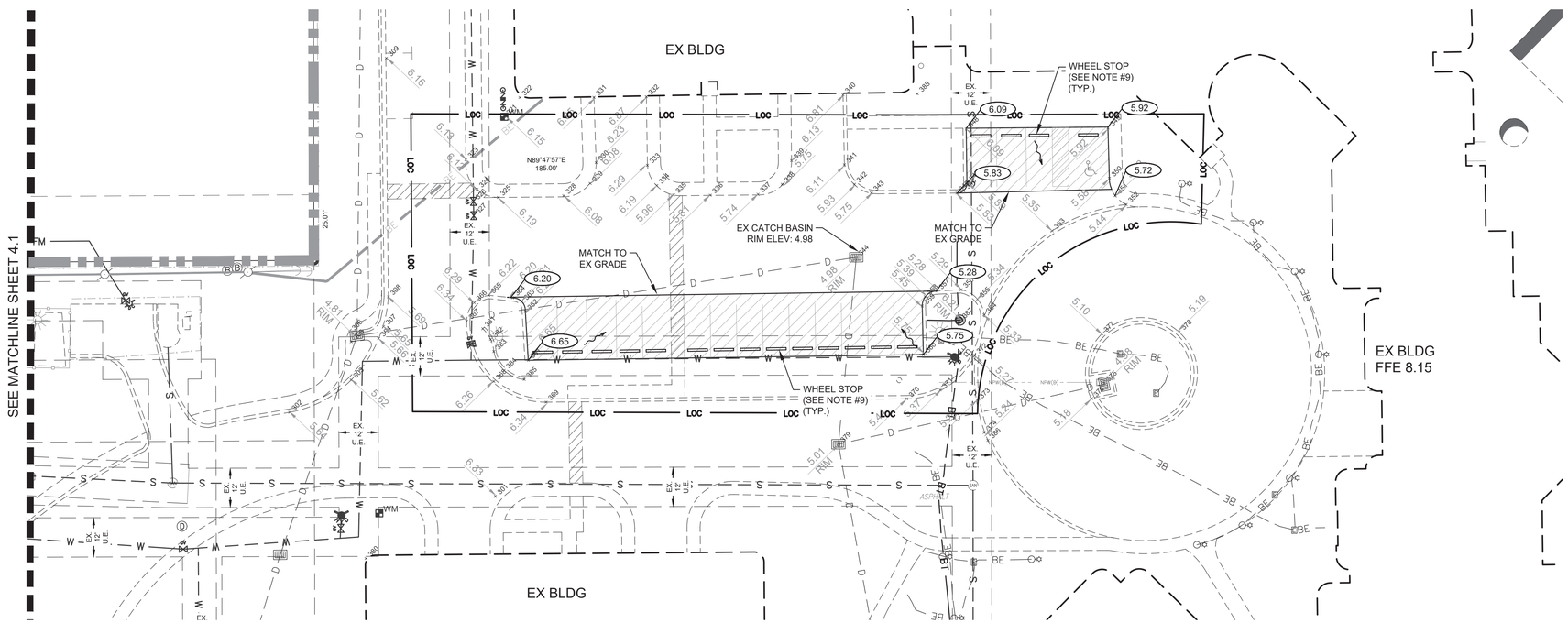

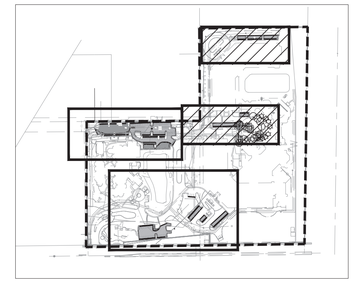

KEY MAP

NTS

N

0 10 20 40

SCALE: 1" = 20'

LEGEND

LIMITS OF CONSTRUCTION	LOC
CONCRETE PAVEMENT	
PROPOSED ASPHALT PAVEMENT	
LIMITS OF ASPHALT MILLING & RESURFACING	
PROPOSED WATER MAIN	W
PROPOSED DRAINAGE PIPE	D
EXISTING DRAINAGE PIPE	D
DRAINAGE STRUCTURE	
FINISHED GROUND ELEVATION	9.23
EXISTING GROUND ELEVATION	9.23
FLOW DIRECTION	
EXISTING CATCH BASIN	
EXISTING SANITARY MANHOLE	SAN
EXISTING FIRE HYDRANT	
EXISTING WATER METER / VALVE	
EXISTING BELL SOUTH	B
EXISTING LIGHT POLE	
EXISTING WATER MAIN	W
EXISTING SEWER	S

NOTE

1. ALL ELEVATIONS ARE BASED ON NORTH ATLANTIC VERTICAL DATUM OF 1988 (NAVD 88).
2. RIM ELEVATIONS ARE BASED ON PROPOSED FINISH GRADES. ADJUSTMENTS MAY BE NECESSARY DUE TO FIELD CONDITIONS. ADJUSTMENTS ARE TO BE MADE BY THE CONTRACTOR WHEN THE BASE COURSE IS IN PLACE OR THE GRADING IS COMPLETE. COST OF ADJUSTING RIMS IS TO BE INCLUDED IN THE BASE BID.
3. 5% MAX. LONGITUDINAL SLOPE AND 2% MAX. CROSS SLOPE ON ALL SIDEWALKS.
4. CONCRETE SIDEWALK SHALL SLOPE AWAY FROM BUILDING.
5. REFER TO STRUCTURAL PLANS FOR CONCRETE PAD DETAILS.
6. REFER TO PLUMBING PLANS FOR WATER AND SEWER CONNECTION INFORMATION.
7. CONTRACTOR SHALL FIELD VERIFY LOCATIONS AND ELEVATIONS OF EXISTING UTILITIES PRIOR SHOP DRAWING APPROVAL.
8. CONTRACTOR SHALL REFERS TO CITY OF DELRAY BEACH DETAIL PW 2.1 (SEE SHEET C5.1) FOR VERTICAL AND HORIZONTAL PIPE SEPARATION.
9. CONTRACTOR SHALL REMOVE, PROTECT, AND RE-USE EXISTING CONCRETE WHEEL STOPS WITHIN LIMITS OF ASPHALT MILLING AND RESURFACING. ALL DAMAGED WHEEL STOPS SHALL BE REPLACED.
10. ANY TREES OR SHRUBS PLACED WITHIN WATER, SEWER OR DRAINAGE EASEMENTS SHALL CONFORM TO THE CIT OF DELRAY BEACH STANDARD DETAILS; LD-1.1 & LD1.2 REFER TO LANDSCAPE PLANS FOR DETAILS.

ABBREVIATIONS

W.E.	WATER EASEMENT
U.E.	UTILITY EASEMENT

WGI
2035 Vista Parkway, West Palm Beach, FL 33411
Phone No. 866.909.2220 www.wginc.com
Cert No. 6091 - LB No. 7055

NO.	DATE	DESCRIPTION	BY

REVISIONS

CAD 4224\00-CV-PGD.DWG	
JOB NO.	4224.00
DRAWN BY	GAT
CHECK BY	CJH
DATE	7-16-19

ENGINEER OF RECORD
CHRISTOPHER J. HOLMES, PE
PE# 66344

HARBOUR'S EDGE PARKING IMPROVEMENTS

PAVING, GRADING, & DRAINAGE PLAN

SHEET:
C4.0

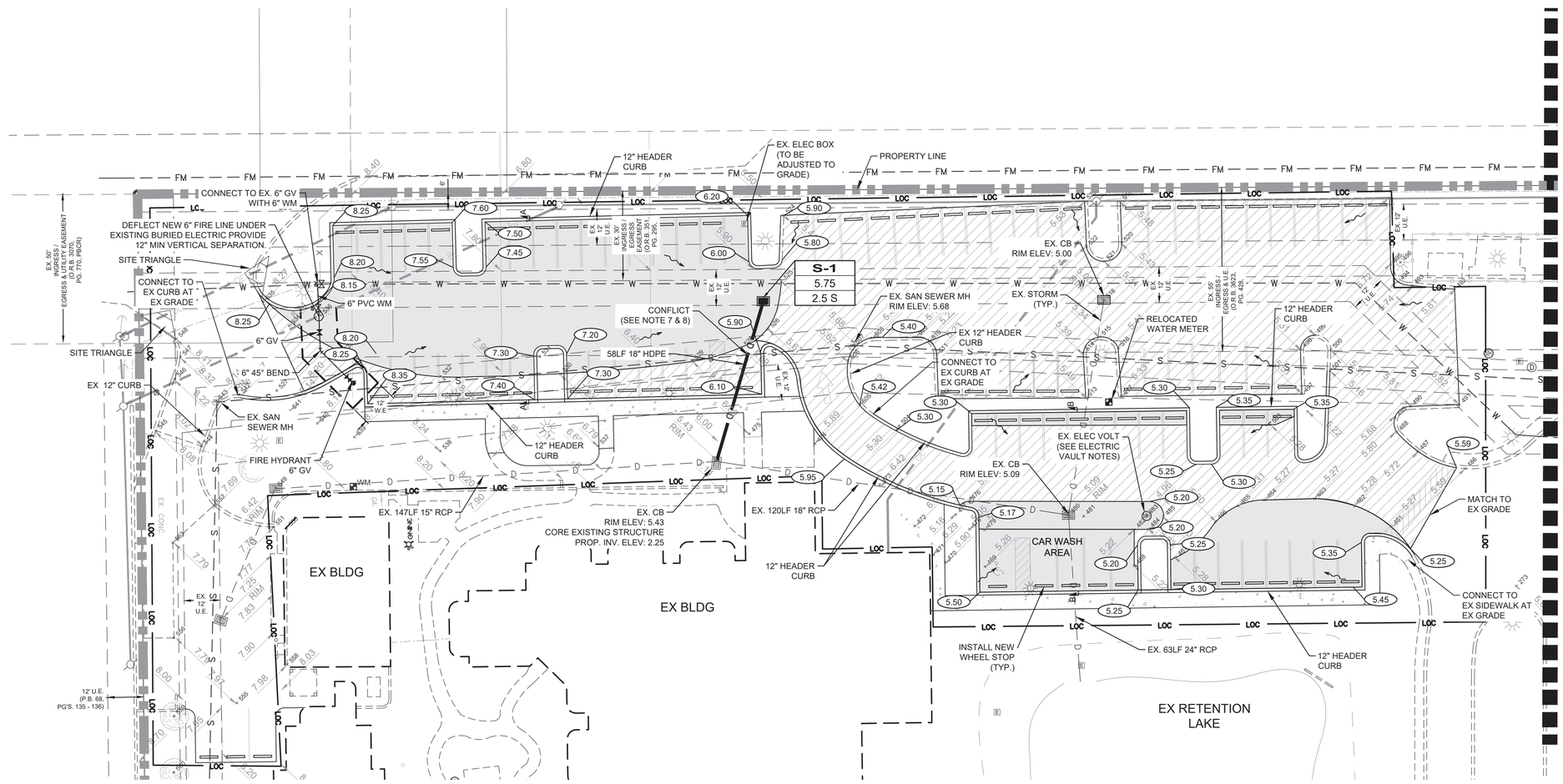

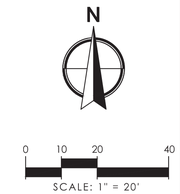

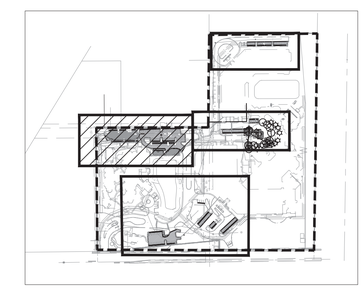

KEY MAP
NTS

ELECTRIC VAULT NOTE

1. CONTRACTOR SHALL MODIFY EXISTING ELECTRICAL VAULT LID WITH TRAFFIC RATED FRAME AND LID
2. ALL ELECTRIC CONDUIT AND WIRES WITHIN ELECTRIC VAULT SHELL REMAIN.

ABBREVIATIONS

W.E. WATER EASEMENT

U.E. UTILITY EASEMENT

NOTE

1. ALL ELEVATIONS ARE BASED ON NORTH ATLANTIC VERTICAL DATUM OF 1988 (NAVD 88).
2. RIM ELEVATIONS ARE BASED ON PROPOSED FINISH GRADES. ADJUSTMENTS MAY BE NECESSARY DUE TO FIELD CONDITIONS. ADJUSTMENTS ARE TO BE MADE BY THE CONTRACTOR WHEN THE BASE COURSE IS IN PLACE OR THE GRADING IS COMPLETE. COST OF ADJUSTING RIMS IS TO BE INCLUDED IN THE BASE BID.
3. 5% MAX. LONGITUDINAL SLOPE AND 2% MAX. CROSS SLOPE ON ALL SIDEWALKS.
4. CONCRETE SIDEWALK SHALL SLOPE AWAY FROM BUILDING.
5. REFER TO STRUCTURAL PLANS FOR CONCRETE PAD DETAILS.
6. REFER TO PLUMBING PLANS FOR WATER AND SEWER CONNECTION INFORMATION.
7. CONTRACTOR SHALL FIELD VERIFY LOCATIONS AND ELEVATIONS OF EXISTING UTILITIES PRIOR TO SHOP DRAWING APPROVAL.
8. CONTRACTOR SHALL REFERS TO CITY OF DELRAY BEACH DETAIL PW 2.1 (SEE SHEET C5.1) FOR VERTICAL AND HORIZONTAL PIPE SEPARATION.
9. CONTRACTOR SHALL REMOVE, PROTECT, AND RE-USE EXISTING CONCRETE WHEEL STOPS WITHIN LIMITS OF ASPHALT MILLING AND RESURFACING. ALL DAMAGED WHEEL STOPS SHALL BE REPLACED.
10. ANY TREES OR SHRUBS PLACED WITHIN WATER, SEWER OR DRAINAGE EASEMENTS SHALL CONFORM TO THE CIT OF DELRAY BEACH STANDARD DETAILS; LD-1.1 & LD1.2 REFER TO LANDSCAPE PLANS FOR DETAILS.

LEGEND

LIMITS OF CONSTRUCTION	LOC
CONCRETE PAVEMENT	
PROPOSED ASPHALT PAVEMENT	
LIMITS OF ASPHALT MILLING & RESURFACING	
PROPOSED WATER MAIN	W
PROPOSED DRAINAGE PIPE	D
EXISTING DRAINAGE PIPE	D
DRAINAGE STRUCTURE	
FINISHED GROUND ELEVATION	9.23
EXISTING GROUND ELEVATION	9.23
FLOW DIRECTION	
EXISTING CATCH BASIN	
EXISTING SANITARY MANHOLE	SAN
EXISTING FIRE HYDRANT	
EXISTING WATER METER / VALVE	WV
EXISTING BELL SOUTH	B
EXISTING LIGHT POLE	
EXISTING WATER MAIN	W
EXISTING SEWER	S

WGI
2035 Vista Parkway, West Palm Beach, FL 33411
Phone No. 866.909.2220 www.wgiinc.com
Cert No. 6091 - LB No. 7055

NO.	DATE	DESCRIPTION	BY
		REVISIONS	

CAD 4224\00-CV-PGD.DWG	
JOB NO.	4224.00
DRAWN BY	GAT
CHECK BY	CJH
DATE	7-16-19

ENGINEER OF RECORD
CHRISTOPHER J. HOLMES, PE
PE# 66344

HARBOUR'S EDGE PARKING IMPROVEMENTS

PAVING, GRADING, & DRAINAGE PLAN

SHEET:
C4.1

Chris Holmes C:\pwworking\gdc\chris.holmes\d1516\6024\4224\00-CV-PGD.dwg — Plotted: 9/23/2019 2:14:59 PM Solved: 9/18/2019 9:10:47 AM

ABBREVIATIONS

W.E. WATER EASEMENT

U.E. UTILITY EASEMENT

NOTE

1. ALL ELEVATIONS ARE BASED ON NORTH ATLANTIC VERTICAL DATUM OF 1988 (NAVD 88).
2. RIM ELEVATIONS ARE BASED ON PROPOSED FINISH GRADES. ADJUSTMENTS MAY BE NECESSARY DUE TO FIELD CONDITIONS. ADJUSTMENTS ARE TO BE MADE BY THE CONTRACTOR WHEN THE BASE COURSE IS IN PLACE OR THE GRADING IS COMPLETE. COST OF ADJUSTING RIMS IS TO BE INCLUDED IN THE BASE BID.
3. 5% MAX. LONGITUDINAL SLOPE AND 2% MAX. CROSS SLOPE ON ALL SIDEWALKS.
4. CONCRETE SIDEWALK SHALL SLOPE AWAY FROM BUILDING.
5. REFER TO STRUCTURAL PLANS FOR CONCRETE PAD DETAILS.
6. REFER TO PLUMBING PLANS FOR WATER AND SEWER CONNECTION INFORMATION.
7. CONTRACTOR SHALL FIELD VERIFY LOCATIONS AND ELEVATIONS OF EXISTING UTILITIES PRIOR TO SHOP DRAWING APPROVAL.
8. CONTRACTOR SHALL REFERS TO CITY OF DELRAY BEACH DETAIL PW 2.1 (SEE SHEET C5.1) FOR VERTICAL AND HORIZONTAL PIPE SEPARATION.
9. CONTRACTOR SHALL REMOVE, PROTECT, AND RE-USE EXISTING CONCRETE WHEEL STOPS WITHIN LIMITS OF ASPHALT MILLING AND RESURFACING. ALL DAMAGED WHEEL STOPS SHALL BE REPLACED.
10. ANY TREES OR SHRUBS PLACED WITHIN WATER, SEWER OR DRAINAGE EASEMENTS SHALL CONFORM TO THE CIT OF DELRAY BEACH STANDARD DETAILS; LD-1.1 & LD1.2 REFER TO LANDSCAPE PLANS FOR DETAILS.

LEGEND

LIMITS OF CONSTRUCTION — LOC —

CONCRETE PAVEMENT

ASPHALT PAVEMENT

LIMITS OF ASPHALT MILLING & RESURFACING

PROPOSED WATER MAIN — W —

PROPOSED DRAINAGE PIPE — D —

EXISTING DRAINAGE PIPE — — — D — — —

DRAINAGE STRUCTURE

FINISHED GROUND ELEVATION 9.23

EXISTING GROUND ELEVATION 9.23

FLOW DIRECTION

EXISTING CATCH BASIN

EXISTING SANITARY MANHOLE SAN

EXISTING FIRE HYDRANT

EXISTING WATER METER / VALVE WM

EXISTING BELL SOUTH B

EXISTING LIGHT POLE

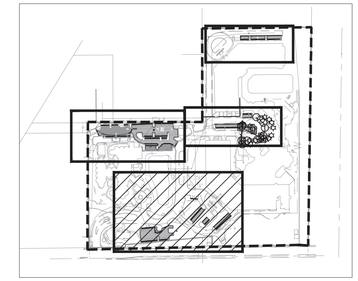

KEY MAP

NTS

N

0 10 20 40

SCALE: 1" = 20'

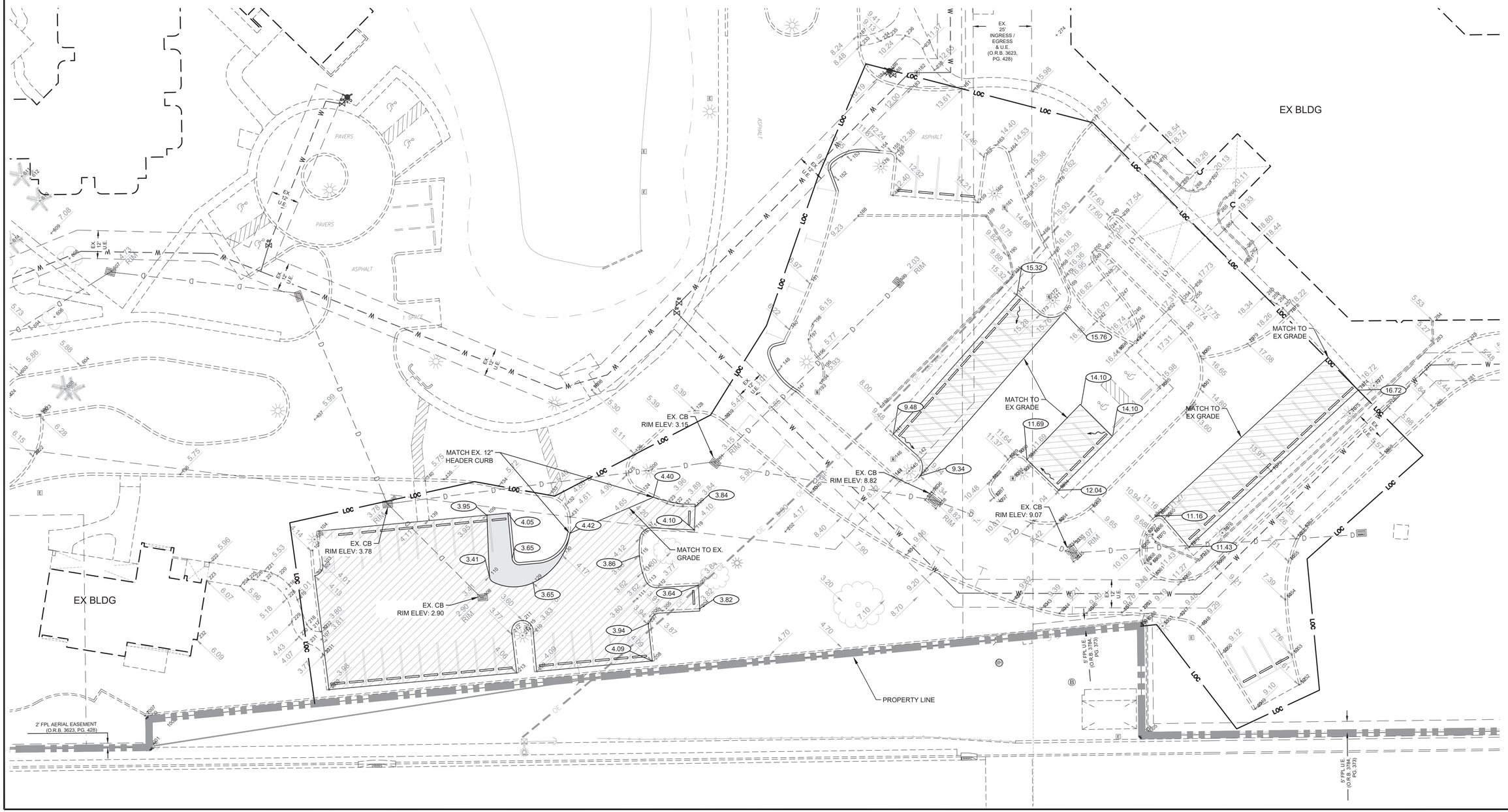

WGL
2035 Vista Parkway, West Palm Beach, FL 33411
Phone No. 866.909.2220 www.wglinc.com
Cert No. 6091 - LB No. 7055

NO.	DATE	DESCRIPTION	BY

REVISIONS

CAD 4224X00-CVPGD.DWG	
JOB NO.	4224.00
DRAWN BY	GAT
CHECK BY	CJH
DATE	7-16-19

ENGINEER OF RECORD
CHRISTOPHER J. HOLMES, PE
PE# 66344

HARBOUR'S EDGE PARKING IMPROVEMENTS

PAVING, GRADING, & DRAINAGE PLAN

SHEET:

C4.2

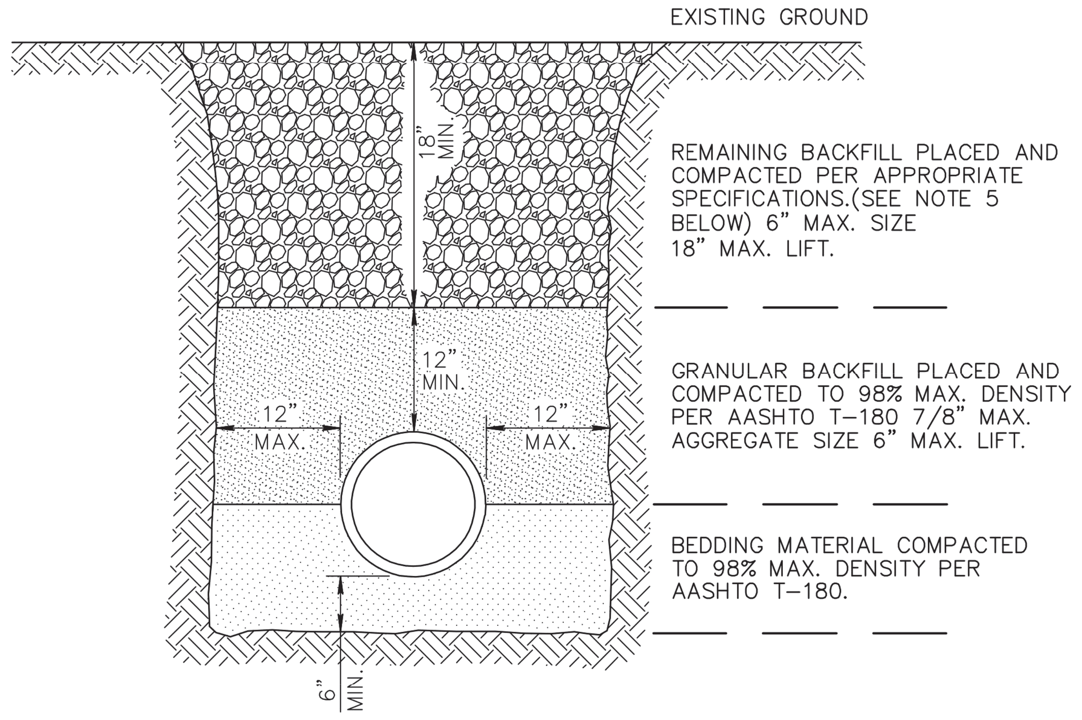

NOTES:

1. UNSUITABLE IN-SITU MATERIALS SUCH AS MUCK, DEBRIS AND LARGE ROCKS SHALL BE REMOVED; BEDDING MATERIAL AND BACKFILL CONSISTING OF WASHED AND GRADED LIMEROCK 3/8" -7/8" SIZING.
2. THE PIPE AND/OR STRUCTURE SHALL BE FULLY SUPPORTED FOR ITS ENTIRE LENGTH WITH APPROPRIATE COMPACTION UNDER THE PIPE HAUNCHES.
3. THE PIPE AND/OR STRUCTURE SHALL BE PLACED IN A DRY TRENCH.
4. BACKFILL SHALL BE FREE OF UNSUITABLE MATERIAL SUCH AS LARGE ROCK, MUCK, AND DEBRIS.
5. COMPACT BACKFILL TO 98% DENSITY UNDER PAVEMENT AND TO 95% DENSITY ELSEWHERE.(AASHTO T-180)
6. COMPACTION AND DENSITY TESTS SHALL BE COMPLETED DURING BACKFILL OPERATIONS, CONTRACTORS NOT FOLLOWING THIS PROCEDURE, FOR WHATEVER REASONS, SHALL BE REQUIRED TO RE-EXCAVATE THE AREA IN QUESTION, DOWN TO THE BEDDING MATERIAL, THEN BACKFILL FOLLOWING THE ABOVE PROCEDURES.

CITY of DELRAY BEACH
ENVIRONMENTAL SERVICES DEPARTMENT
434 SOUTH SWINTON AVENUE, DELRAY BEACH, FLORIDA 33444
TYPICAL BACKFILL DETAIL
DATE: 06-05-08
GU 2.1

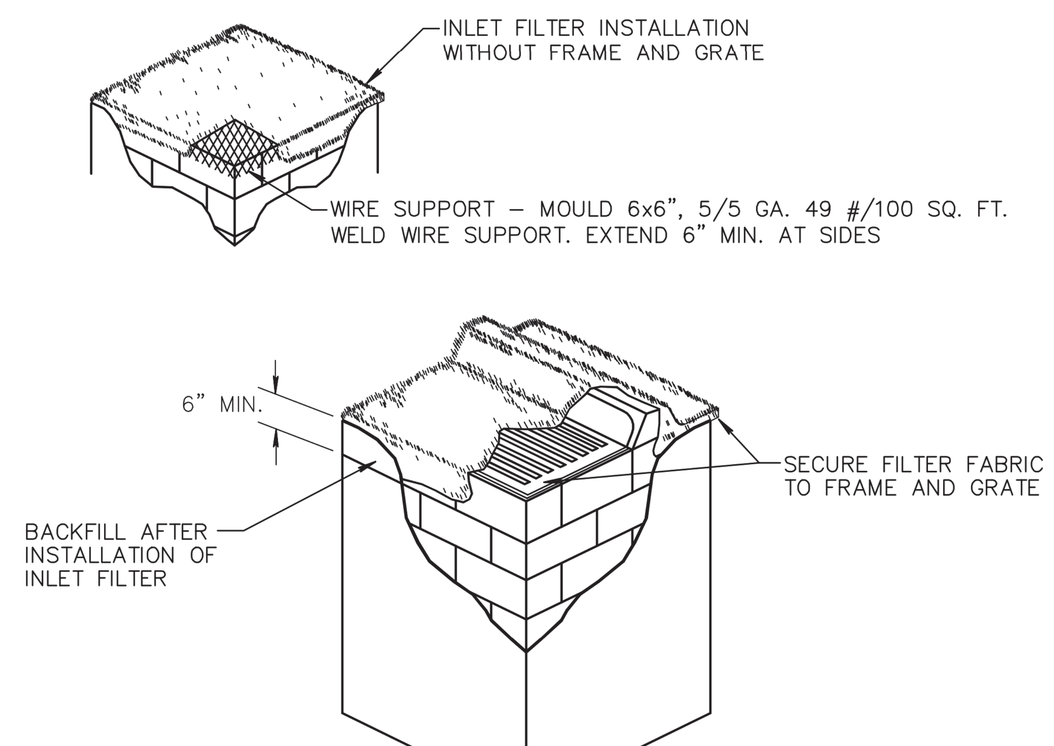

NOT TO SCALE

NOTES:

1. CONTRACTOR IS TO CLEAN INLET FILTER AFTER EVERY STORM.
2. CONTRACTOR TO REMOVE FABRIC JUST PRIOR TO PAVING.

A SEDIMENT TRAP WILL BE EXCAVATED BEHIND THE CURB AT THE INLET. THE BASIN SHALL BE AT LEAST 12 TO 14 INCHES IN DEPTH, APPROXIMATELY 36 INCHES IN WIDTH, AND APPROXIMATELY 7 TO 10 FEET IN LENGTH PARALLEL TO THE CURB.

STORM WATER WILL REACH THE SEDIMENT TRAP VIA CURB CUTS ADJACENT TO EACH SIDE OF THE INLET STRUCTURE. THESE OPENINGS SHALL BE AT LEAST 12 INCHES IN LENGTH. STORM WATER MAY ALSO REACH THE BASIN VIA OVERLAND FLOW LAND AREA BEHIND THE CURB. THE CURB CUTS SHALL BE REPAIRED WHEN THE SEDIMENT TRAP IS REMOVED.

CITY of DELRAY BEACH
ENVIRONMENTAL SERVICES DEPARTMENT
434 SOUTH SWINTON AVENUE, DELRAY BEACH, FLORIDA 33444
INLET FILTER DETAIL
DATE: 11-21-00
D 8.1

1. THE INTENT OF EROSION CONTROL MEASURES INDICATED GRAPHICALLY ON PLANS IS TO PROVIDE A BARRIER TO CONTAIN SILT AND SEDIMENT ON THE PROJECT SITE. THIS REPRESENTATION IS PROVIDED FOR THE CONVENIENCE OF THE CONTRACTOR. THE TEST OF EROSION CONTROL EFFECTIVENESS IS NOT TO BE DETERMINED BY ADHERENCE TO THE REPRESENT SET FORTH ON THE DRAWINGS AND SPECIFICATIONS, BUT BY MEETING THE REGULATIONS SET FORTH BY THE AUTHORITY HAVING JURSDICTION OVER WATER QUALITY CONTROL AND OTHER SEDIMENTATION RESTRICTION REQUIREMENTS IN THE REGION.
2. APPROVED EROSION AND SEDIMENT CONTROL MEASURES SHALL BE INSTALLED PRIOR TO ANY CLEARING GRADING, EXCAVATION, FILLING, OR OTHER LAND DISTURBANCE ACTIVITIES, EXCEPT THOSE OPERATIONS NEEDED TO INSTALL SUCH MEASURES.
3. INSPECTION OF ALL EROSION CONTROL MEASURES SHALL BE CONDUCTED WEEKLY, OR AFTER EACH RAINFALL EVENT. REPAIR, AND/OR REPLACEMENT OF SUCH MEASURES SHALL BE MADE PROMPTY, AS NEEDED.
4. KEEP DUST WITHIN TOLERABLE LIMITS BY SPRINKLING OR OTHER ACCEPTABLE MEANS.
5. ADDITIONAL EROSION AND SEDIMENT CONTROL MEASURES MAY BE REQUIRED IF DEEMED NECESSARY BY ONSITE INSPECTION.
6. FAILURE TO PROPERLY INSTALL AND MAINTAIN EROSION CONTROL PRACTICES SHALL RESULT IN CONSTRUCTION BEING HALTED.
7. DRAINAGE INLETS SHALL BE PROTECTED BY FILTER AND GRADED ROCK AS PER INLET PROTECTION DETAIL.
8. ANY ACCESS ROUTES TO SITE SHALL BE BASED WITH CRUSHED STONE, WHERE PRACTICAL.
9. EROSION CONTROL MEASURES ARE TO BE MAINTAINED UNTIL PERMANENT GROUND COVER IS ESTABLISHED.
10. WHENEVER FEASIBLE, NATURAL VEGETATION SHALL BE RETAINED AND PROTECTED.
11. ALL WORK IS TO BE IN COMPLIANCE WITH THE RULES AND REGULATIONS SET FORTH BY THE STATE OF FLORIDA, DEPARTMENT OF ENVIRONMENTAL PROTECTION AND THE CITY OF DELRAY BEACH.
12. DISCHARGE FROM DEWATERING OPERATIONS SHALL BE RETAINED ONSITE IN A CONTAINMENT AREA.

CITY of DELRAY BEACH
ENVIRONMENTAL SERVICES DEPARTMENT
434 SOUTH SWINTON AVENUE, DELRAY BEACH, FLORIDA 33444
EROSION CONTROL NOTES DETAIL
DATE: 03-24-08
D 9.1

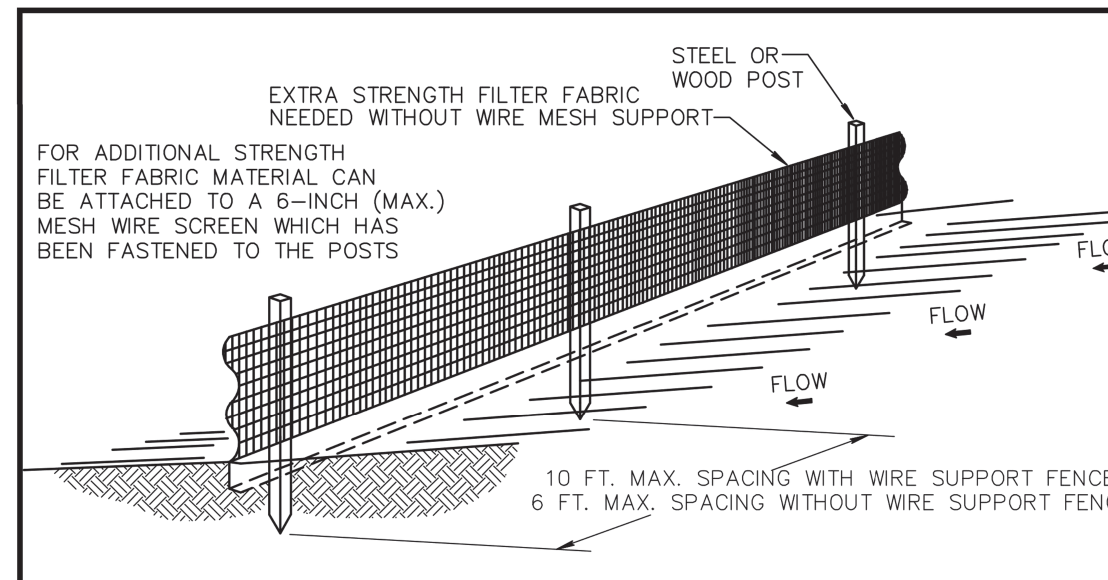

NOTES:

1. THE HEIGHT OF A SILT FENCE SHALL NOT EXCEED 36 INCHES (90 CM).
2. THE FILTER FABRIC SHALL BE PURCHASED IN A CONTINUOUS ROLL CUT TO THE LENGTH OF THE BARRIER TO AVOID THE USE OF JOINTS.
3. POSTS SHALL BE SPACED A MAXIMUM OF 10 FEET (3 M) APART AT THE BARRIER LOCATION AND DRIVEN SECURELY INTO THE GROUND A MINIMUM OF 12 INCHES (30 CM). WHEN EXTRA STRENGTH FABRIC IS USED WITHOUT THE WIRE SUPPORT FENCE, POST SPACING SHALL NOT EXCEED 6 FEET (1.8 M).
4. A TRENCH SHALL BE EXCAVATED APPROXIMATELY 4 INCHES (10 CM) WIDE AND 4 INCHES (10 CM) DEEP ALONG THE LINE OF POSTS AND UPSLOPE FROM THE BARRIER.
5. WHEN STANDARD STRENGTH FILTER FABRIC IS USED, A WIRE MESH SUPPORT FENCE SHALL BE FASTENED SECURELY TO THE UPSLOPE SIDE OF THE POSTS USING HEAVY DUTY WIRE STAPLES AT LEAST 1 INCH (25 MM) LONG, TIE WIRES, OR HOG RINGS. THE WIRE SHALL EXTEND INTO THE TRENCH A MINIMUM OF 2 INCHES (5 CM) AND SHALL NOT EXTEND MORE THAN 36 INCHES (90 CM) ABOVE THE ORIGINAL GROUND SURFACE.
6. THE STANDARD STRENGTH FILTER FABRIC SHALL BE STAPLED OR WIRED TO THE FENCE, AND 8 INCHES (20 CM) OF THE FABRIC SHALL BE EXTENDED INTO THE TRENCH. THE FABRIC SHALL NOT EXTEND MORE THAN 36 INCHES (90 CM) ABOVE THE ORIGIONAL GROUND SURFACE.
7. THE TRENCH SHALL BE BACKFILLED AND THE SOIL COMPACTED OVER THE FILTER FABRIC.
8. ALL PROJECTS REQUIRE SUBMITTAL OF POLLUTION PREVENTION PLAN (PPP).
9. ALL PROJECTS 1 AC. OR MORE MUST SUBMIT NOTICE OF INTENT (NOI) TO FDEP.

CITY of DELRAY BEACH
ENVIRONMENTAL SERVICES DEPARTMENT
434 SOUTH SWINTON AVENUE, DELRAY BEACH, FLORIDA 33444
SILT FENCE INSTALLATION DETAIL (Sheet 1 of 2)
DATE: 01-02-01
D 9.1a

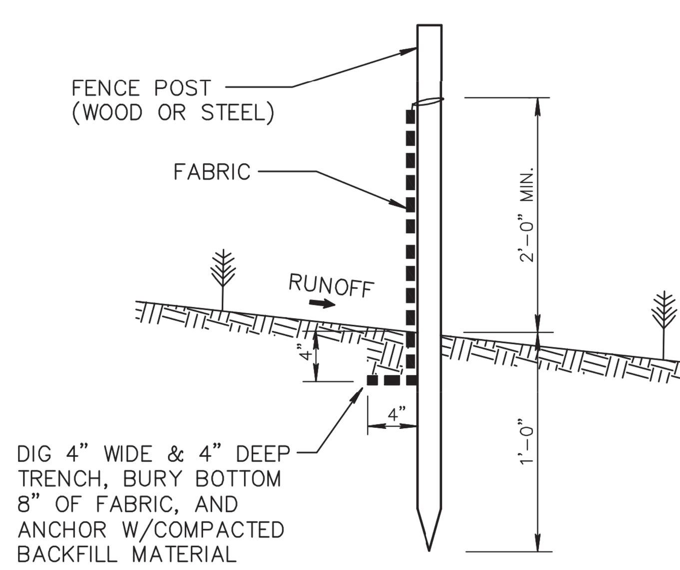

SILT FENCE SECTION
NOT TO SCALE

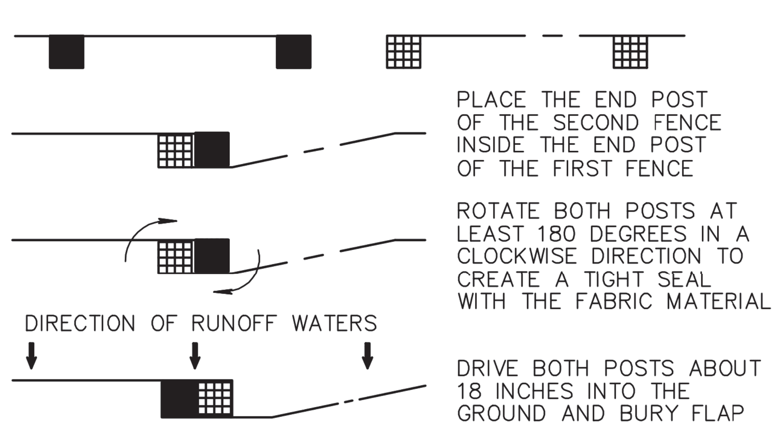

ATTACHING TWO SILT FENCES
NOT TO SCALE

CITY of DELRAY BEACH
ENVIRONMENTAL SERVICES DEPARTMENT
434 SOUTH SWINTON AVENUE, DELRAY BEACH, FLORIDA 33444
SILT FENCE INSTALLATION DETAIL (Sheet 2 of 2)
DATE: 01-02-01
D 9.1b

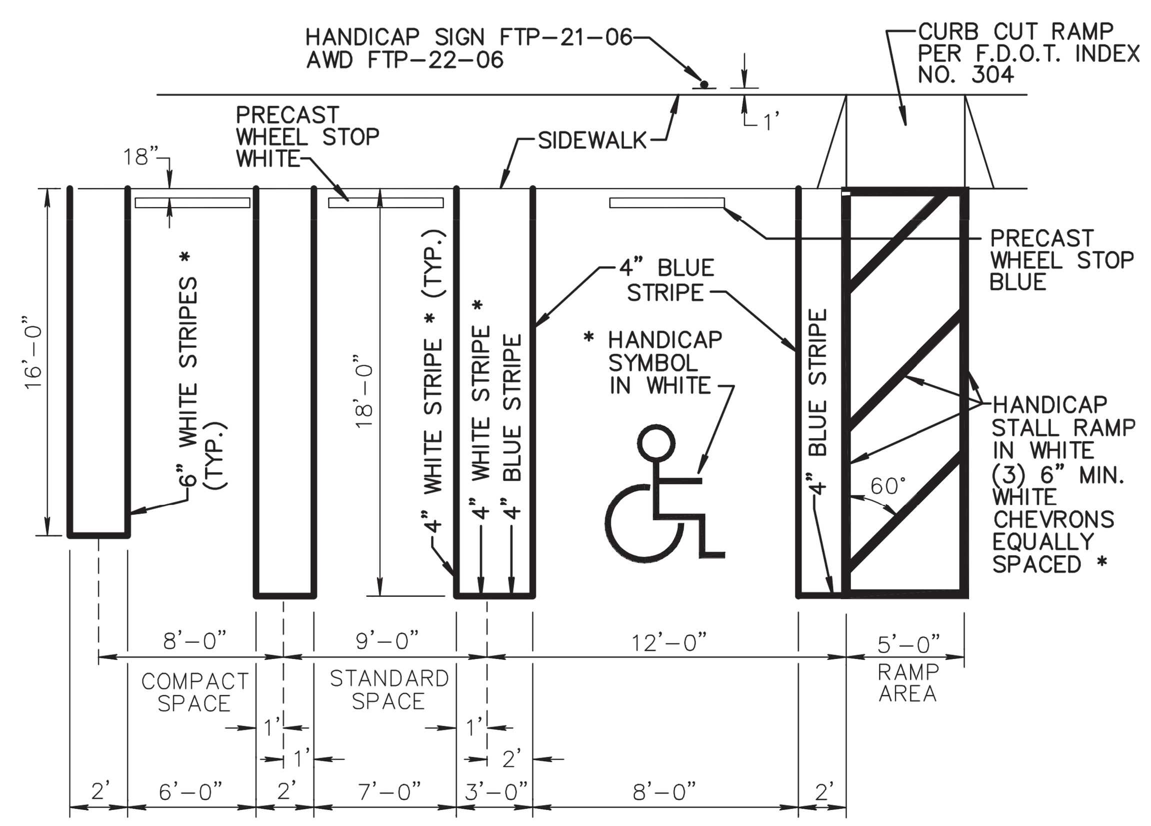

PARKING STALL DIMENSIONS:

STANDARD	9'x 18'
COMPACT	8'x 16'
HANDICAP	12'x 18' PLUS 5' RAMP AREA

* NOTES:

1. ON LIGHT COLORED SURFACE I.E. CONCRETE ALL HANDICAP MARKINGS SHALL BE BLUE AND STANDARD PARKING STRIPING SHALL BE 3" WHITE WITH 1" BLACK BORDER.
2. ALL STRIPPING WITHIN PUBLIC RIGHT-OF-WAY SHALL BE 6 INCHES.
3. ALL MEASUREMENTS ARE FROM CENTER LINE.
4. ALL COMPACT SPACES MUST HAVE "COMPACT" STENCILED WITH BLACK PAINT ON WHEEL STOP.
5. BLUE STRIPE & H/C SYMBOL AND WALKWAY ON CONCRETE
6. 24" STOP BAR BETWEEN ALL PARKING LOTS AND PUBLIC R/W SHALL BE THERMOPLASTIC AND PER FDOT SPECIFICATIONS AND STOP SIGN R1-1

CITY of DELRAY BEACH
ENVIRONMENTAL SERVICES DEPARTMENT
434 SOUTH SWINTON AVENUE, DELRAY BEACH, FLORIDA 33444
TYPICAL PARKING SPACES (1 OF 3)
DATE: 07-02-2014
RT 4.2a

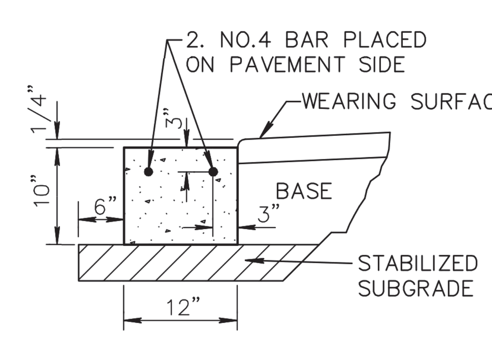

CONCRETE
HEADER CURB
NOT TO SCALE

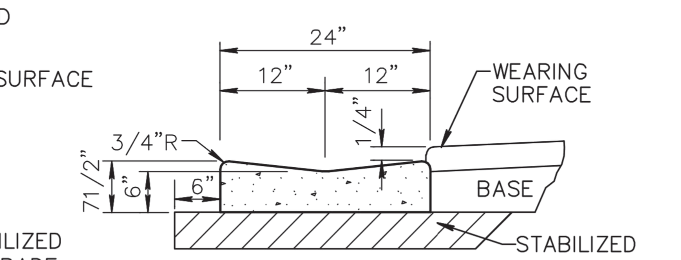

VALLEY GUTTER
NOT TO SCALE

NOTE: SAWCUTS REQUIRED AT 10' CENTERS.

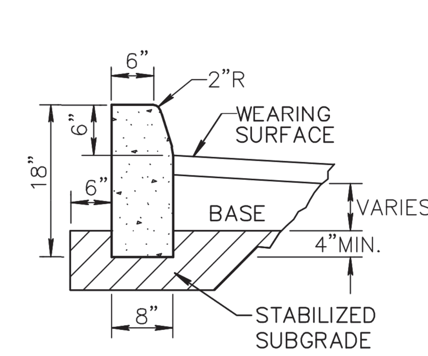

F.D.O.T. TYPE "D"

CONCRETE CURB
NOT TO SCALE

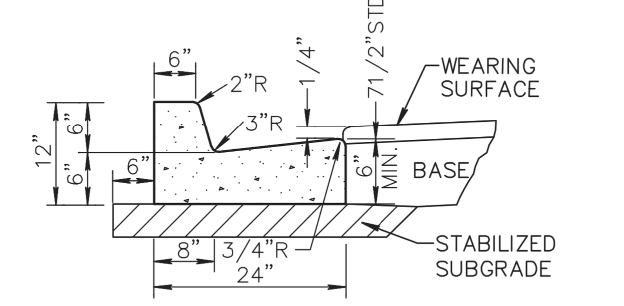

NOTE: WHEN USED ON HIGH SIDE OF ROADWAYS, CROSS SLOPE OF THE GUTTER SHALL MATCH THE CROSS SLOPE OF THE ADJACENT PAVEMENT AND THE THICKNESS OF THE LIP SHALL BE 6" MIN.

F.D.O.T. TYPE "F"

CONCRETE
CURB AND GUTTER
NOT TO SCALE

NOTES: 1. ROADWAY SUBGRADE SHALL IN ALL CASES EXTEND BELOW CURBING.
2. SAWCUTS AT 10' CENTERS SHALL BE MADE WITHIN 24 HOURS OF CONCRETE PLACEMENT.

CITY of DELRAY BEACH
ENVIRONMENTAL SERVICES DEPARTMENT
434 SOUTH SWINTON AVENUE, DELRAY BEACH, FLORIDA 33444
CURB AND GUTTER SECTIONS
DATE: 04-08-08
RT 6.1

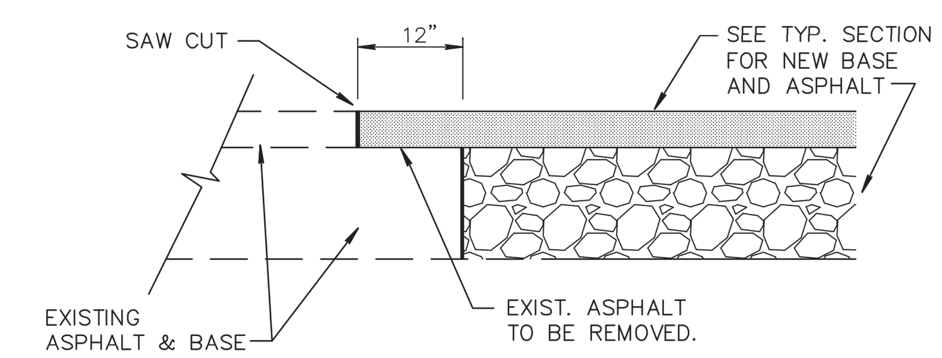

NEW CONSTRUCTION PAVEMENT JOINT

NOTE:

THIS METHOD OF PAVEMENT JOINT SHALL BE USED FOR ANY APPLICATION OR CONSTRUCTION WHERE PROPOSED PAVEMENT AND BASE WILL BE CONNECTED TO EXISTING PAVEMENT AND BASE.

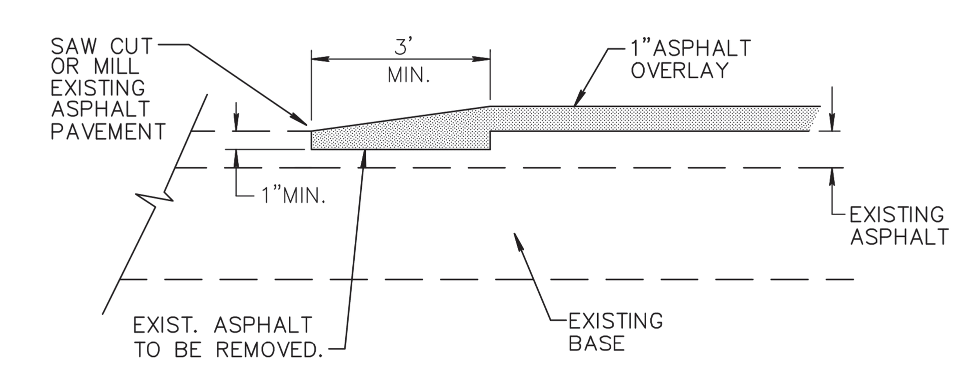

NEW OVERLAY PAVEMENT JOINT

NOTE:

THIS METHOD OF PAVEMENT JOINT SHALL BE USED FOR ANY APPLICATION OR CONSTRUCTION WHERE PROPOSED PAVEMENT WILL BE CONNECTED TO EXISTING PAVEMENT.

CITY of DELRAY BEACH
ENVIRONMENTAL SERVICES DEPARTMENT
434 SOUTH SWINTON AVENUE, DELRAY BEACH, FLORIDA 33444
PAVEMENT JOINT
DATE: 12-30-2002
RT 7.1

WGI®
2035 Vista Parkway, West Palm Beach, FL 33411
Phone No. 866.909.2220 www.wginc.com
Cert No. 6091 - LB No. 7055

REVISIONS

NO.	DATE	DESCRIPTION	BY

CAD	422400-CV-PDD.DWG
JOB NO.	4224.00
DRAWN BY	GAT
CHECK BY	CJH
DATE	7-16-19

ENGINEER OF RECORD
CHRISTOPHER J. HOLMES, PE
PE# 66344

HARBOUR'S EDGE
PARKING IMPROVEMENTS

SITE DETAILS

SHEET:
C5.0

Grace Turner C:\pwworking\wgi\grace.turner\d1516926\422400-CV-PDD.dwg ---- Plotted: 9/18/2019 9:08:47 AM Saved: 8/27/2019 3:12:23 PM

PAVEMENT MARKING SPECIFICATIONS

All Pavement markings to be installed per these typicals, plans and specifications, and as directed by the City Engineer and shall conform to the requirements of F.D.O.T. and the manual on uniform traffic control devices, (MUTCD).

PERMANENT MARKINGS

Installation:
- All markings shall be installed by the extruded method.
- Markings shall be free of weaves, bows, drips, drags, and other degrading items.
- Chalk shall be used for all layout markings

Materials:
- All materials shall be alkyd or hydrocarbon thermoplastic meeting all FDOT specifications.

Thickness:
- All markings shall be installed to yield 90 mils of material measured above the pavement surface.

Spheres:
- Reflective glass sheres are to be applied to all stripes and markings per FDOT specifications.

Alternate Material:
- STAYMARK marking tape, or equivalent may be used, as approved or directed by the City Engineer.

Layout:
- Layout shall be made using marking chalk.
- It is recommended that marking layout be inspected by the City Engineer prior to the placement of final markings.

TEMPORARY MARKINGS

Temporary markings may be used only as specified in this section, or as approved or directed by the City Engineer.

Final Pavement Surface:
- Only foil backed marking tape is allowed.
- All tape shall be totally removed concurrent with permanent marking placement.

Other Pavement Surfaces:
- Intermediate pavement surfaces may be marked with FDOT approved materials, designs, and specifications.

CITY of DELRAY BEACH
ENVIRONMENTAL SERVICES DEPARTMENT
434 SOUTH SWINTON AVENUE, DELRAY BEACH, FLORIDA 33444

PAVEMENT MARKING SPECIFICATIONS (SHEET 1 OF 2)

DATE: 12-30-2002

RT 8.1a

ALL PAVEMENT MARKINGS

All paved surfaces shall be properly marked prior to the hours of darkness.

RAISED PAVEMENT MARKERS

- R.P.M.s shall be installed on all lane lines and centerlines, spaced at 20' or 40'.
- R.P.M.s shall be a 4 x 4 type class "B" marker meeting F.D.O.T. specifications and shall be approved by the City Engineer prior to use.
- R.P.M.'s shall be installed using alkyd thermoplastic on asphalt and epoxy on concrete.

OTHER NOTES

- All Materials within right-of-way shall be thermoplastic and per F.D.O.T. specifications.
- Pavement marking within private parking lots may be painted according to F.D.O.T. specifications, except for all stop bars adjacent to public rifgt-of-way.

CITY of DELRAY BEACH
ENVIRONMENTAL SERVICES DEPARTMENT
434 SOUTH SWINTON AVENUE, DELRAY BEACH, FLORIDA 33444

PAVEMENT MARKING SPECIFICATIONS (SHEET 2 OF 2)

DATE: 08-04-2011

RT 8.1b

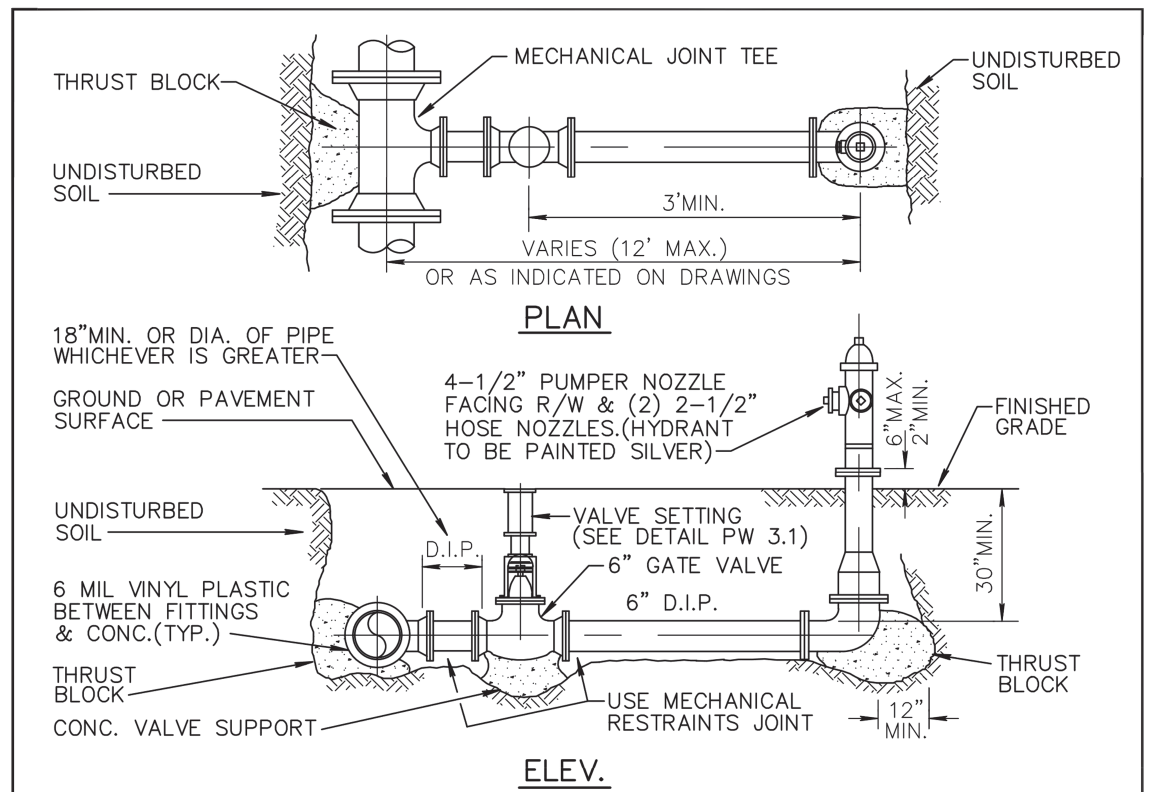

NOTES:

1. HYDRANT SHALL BE INSTALLED PLUMB AND TRUE IN UNOBSTRUCTED LOCATION. (7.5' CLEARANCE ON THREE SIDES, 4' CLEARANCE AT REAR, WITH 3' ACCESS LANE)
2. NO BARREL EXTENSION SHALL BE PERMITTED WITHOUT PRIOR CONSENT OF CITY ENGINEER.
3. VALVE SHALL BE PLACED ADJACENT TO MAIN, TIED TO TEE.
4. ANCHOR TEES AND FITTINGS ARE PERMITTED.
5. HYDRANT SHALL BE MUELLER CENTURION, AMERICAN B-84B, CLOW MEDALLION OR KENNEDY K81A WITH TRAFFIC BREAKAWAY FLANGE AND 5-1/4" VALVE.
6. HYDRANTS SHALL NOT ENCROACH IN SIDEWALKS, ROADWAYS, OR BIKE PATHS.
7. ON RUNS LONGER THAN 20 FEET A SECOND VALVE IS REQUIRED AT THE HYDRANT.
8. ALL HYDRANT INSTALLATION SHALL BE IN ACCORDANCE WITH CITY OF DELRAY BEACH FIRE PREVENTION CODE SEC. 96.05.
9. IN CERTAIN SITUATIONS, PROTECTIVE BOLLARDS MAY BE REQUIRED AS DIRECTED BY THE ENGINEERING DEPT. (SEE BOLLARD DETAIL PW 5.2)
10. FIRE HYDRANTS INSTALLED BUT NOT YET IN SERVICE SHALL BE COVERED WITH A BURLAP, OR PLASTIC SACK, OR HAVE OUT OF SERVICE RING IN PLACE.
11. ALL HYDRANT LEADS GREATER THAN 20-FEET MUST HAVE AUTOMATIC FLUSHER INSTALLED AT HYDRANT END (HYDROGUARD HG-1 STANDARD).

CITY of DELRAY BEACH
ENVIRONMENTAL SERVICES DEPARTMENT
434 SOUTH SWINTON AVENUE, DELRAY BEACH, FLORIDA 33444

TYPICAL FIRE HYDRANT INSTALLATION

DATE: 06-27-2014

PW 5.1

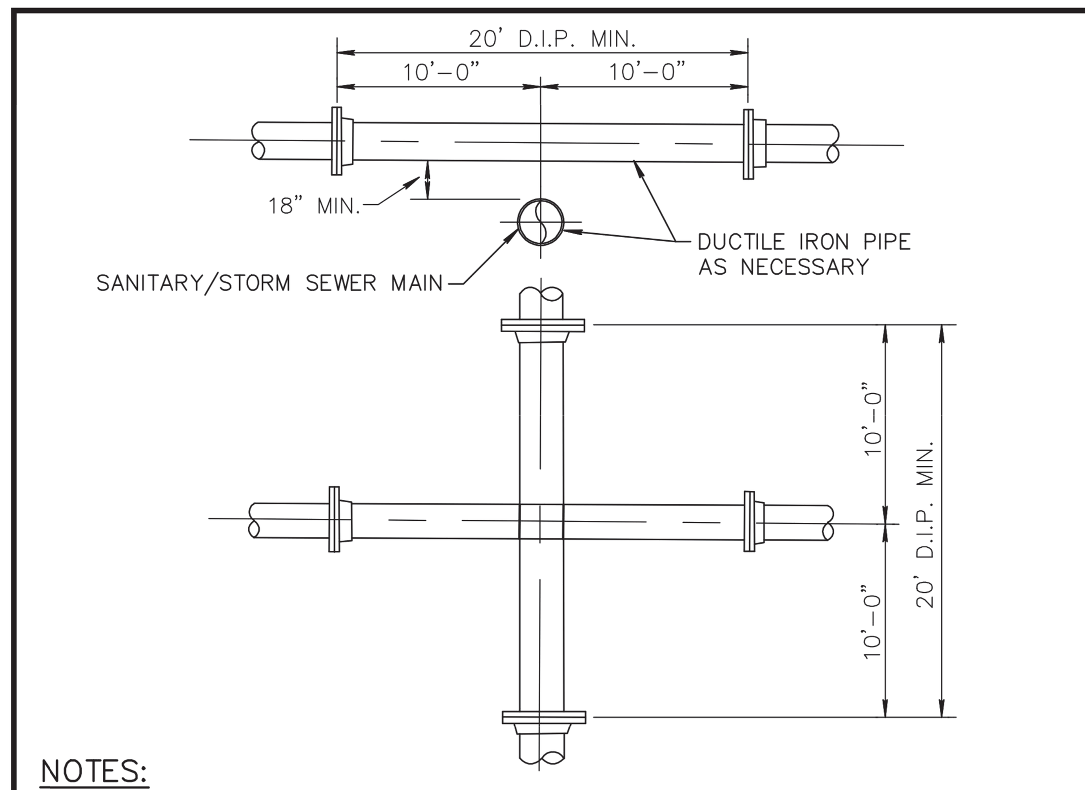

NOTES:

1. STORM AND SANITARY SEWERS CROSSING UNDER WATER MAINS SHALL BE LAID TO PROVIDE A MINIMUM VERTICAL DISTANCE OF 18 INCHES BETWEEN THE INVERT OF THE UPPER PIPE AND THE CROWN OF THE LOWER PIPE. WHERE THIS MINIMUM SEPARATION CANNOT BE MAINTAINED. THE CROSSING SHALL BE ARRANGED SO THAT THE SEWER PIPE JOINTS AND WATER MAIN JOINTS ARE EQUIDISTANT FROM POINT OF CROSSING WITH NO LESS THAN (10) FEET BETWEEN ANY TWO JOINTS AND BOTH PIPES SHALL BE D.I.P., AND THE MINIMUM VERTICAL SEPARATION SHALL BE 6 INCHES. WHERE THERE IS NO ALTERNATIVE TO SEWER PIPES CROSSING OVER A WATER MAIN, THE CRITERIA FOR MINIMUM 18" VERTICAL SEPARATION BETWEEN LINES AND JOINT ARRANGEMENT, AS STARTED ABOVE, SHALL BE REQUIRED AND BOTH PIPES SHALL BE CLASS 52 D.I.P. IRRESPECTIVE OF SEPARATION. D.I.P. IS NOT REQUIRED FOR STORM SEWERS.
2. MAINTAIN (10) FEET HORIZONTAL DISTANCE BETWEEN WATER MAIN AND STORM OR SANITARY SEWER MAIN, AS A MINIMUM.
3. FORCE MAIN CROSSING WATER MAIN SHALL BE LAID TO PROVIDE A MINIMUM VERTICAL DISTANCE OF 18 INCHES BETWEEN THE OUTSIDE OF THE FORCE MAIN AND THE OUTSIDE OF THE WATER MAIN WITH WATER MAIN CROSSING OVER FORCE MAIN.
4. SEWER SERVICE LATERALS SHALL CROSS UNDER WATERMAINS WITH A MINIMUM VERTICAL SEPARATION OF EIGHTEEN (18) INCHES. IF EIGHTEEN (18) INCHES VERTICAL SEPARATION CANNOT BE MAINTAINED, THEN THE WATERMAIN SHALL BE D.I.P. AND THE SANITARY LATERAL C-900 SDR18 OR BETTER AND THE MINIMUM SEPARATION SHALL BE SIX (6) INCHES.
5. WHEN IT IS NOT POSSIBLE FOR THE WATER MAIN TO CROSS OVER THE SEWER SERVICE LATERAL A MINIMUM VERTICAL SEPARATION OF AT LEAST TWELVE (12) INCHES MUST BE MAINTAINED. THE WATERMAIN SHALL BE D.I.P. AND THE SEWER LATERAL SHALL BE C-900 SDR-18 OR BETER.

CITY of DELRAY BEACH
ENVIRONMENTAL SERVICES DEPARTMENT
434 SOUTH SWINTON AVENUE, DELRAY BEACH, FLORIDA 33444

WATER MAIN & SEWER CONFLICT

DATE: 02-19-08

PW 2.1

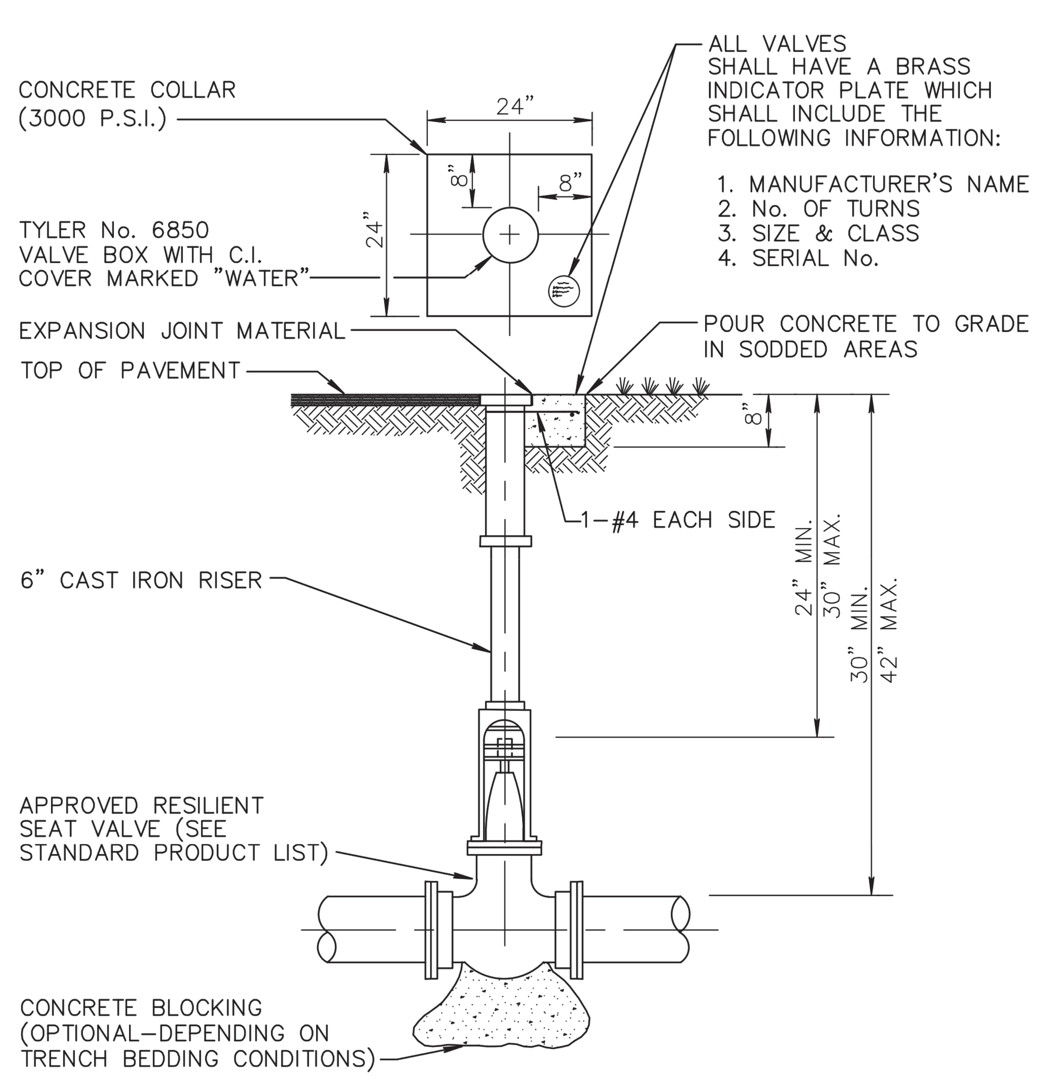

NOTES:

1. WHEN VALVE IS DEEPER THAN 30" AN EXTENSION WITH UNIVERSAL JOINT SHALL BE REQUIRED TO BRING OPERATING NUT 24"-30" BELOW FINISHED GRADE EXTENSION BOLTS & NUTS SHALL BE 316 STAINLESS STEEL. A 316 STAINLESS STEEL CENTERING PLATE SHALL ALSO BE REQUIRED.
2. AT DEAD END OR WHERE MAIN LINES CHANGE DIRECTION, VALVES SHALL BE RESTRAINED USING MECHANICAL JOINT RESTRAINTS, TIERODS, OR OTHER APPROVED RESTRAINT.

CITY of DELRAY BEACH
ENVIRONMENTAL SERVICES DEPARTMENT
434 SOUTH SWINTON AVENUE, DELRAY BEACH, FLORIDA 33444

TYPICAL GATE VALVE DETAIL 4" THRU 12"

DATE: 06-27-14

PW 3.1

INLET TYPE	DIMENSIONS		GRATE TYPE	MAX. PIPE SIZE	
	A	B		WALL A	WALL B
'C'	2'-0"	3'-1"	U.S. FOUNDRY No. 6212	15" R.C.P.	24" R.C.P.
'E'	3'-0"	4'-5"	U.S. FOUNDRY No. 6290	24" R.C.P.	36" R.C.P.

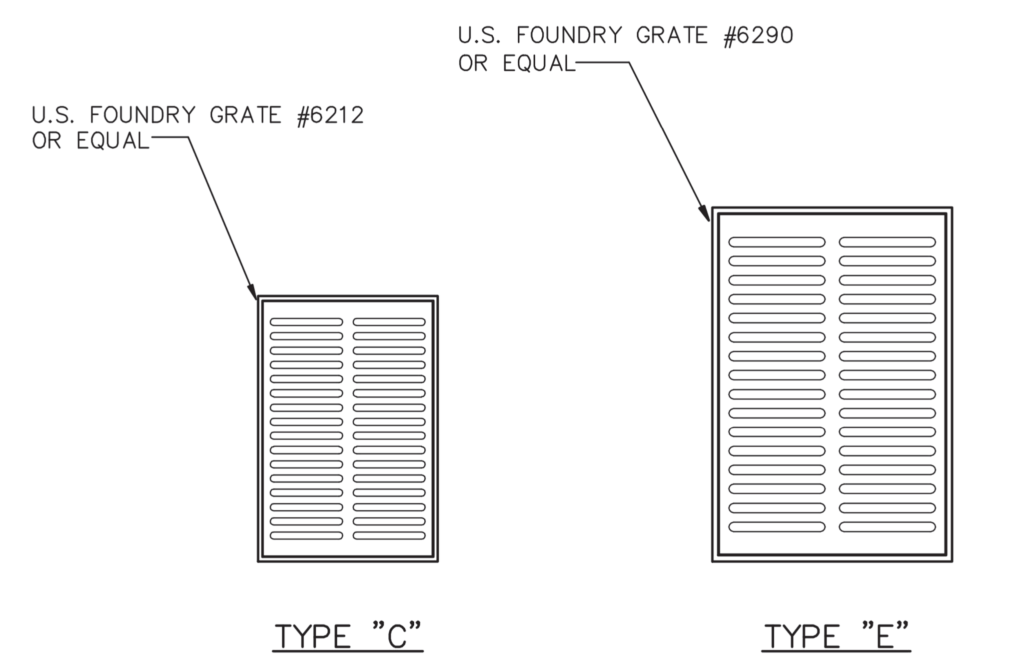

NOTES:

1. ALL GRATES SHALL BE SUITABLE FOR H-20 LOADING (HIGHWAY TRAFFIC LOADS)
2. WHEN INSTALLED IN PAVEMENT OR WITHIN 6' OF PAVEMENT USE U.S.F. 4160-6210

CITY of DELRAY BEACH
ENVIRONMENTAL SERVICES DEPARTMENT
434 SOUTH SWINTON AVENUE, DELRAY BEACH, FLORIDA 33444

TYPE C & E INLET GRATE DETAIL

DATE: 01-30-2006

D 6.1

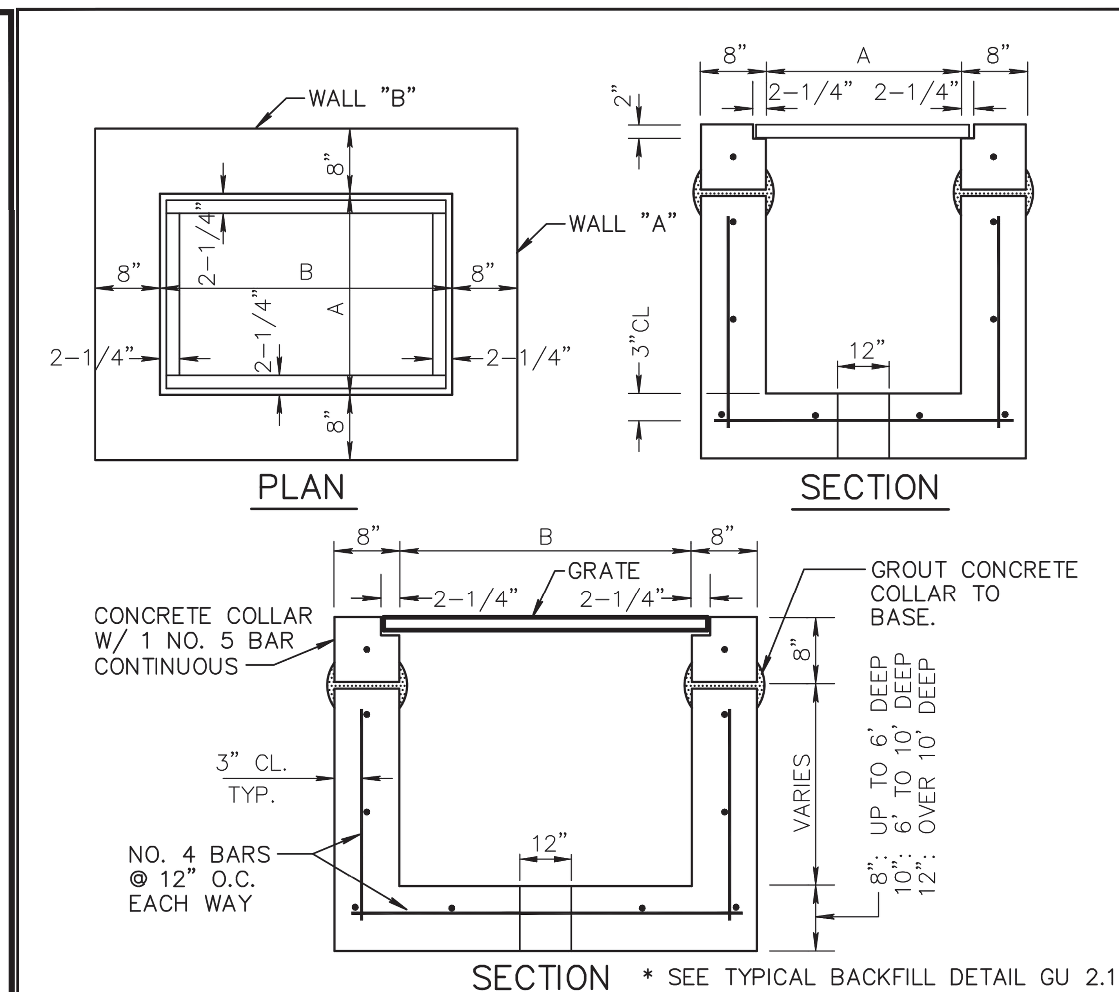

* SEE TYPICAL BACKFILL DETAIL GU 2.1

INLET TYPE	DIMENSIONS		GRATE TYPE	MAX. PIPE SIZE	
	A	B		WALL A	WALL B
'C'	2'0"	3'1"	U.S. FOUNDRY NO. 6212	15" R.C.P.	24" R.C.P.
'E'	3'0"	4'6"	U.S. FOUNDRY NO. 6290	24" R.C.P.	36" R.C.P.

NOTES:

1. INLET TO BE PRECAST WITH CLASS 'A' 4000 P.S.I. CONCRETE.
2. ALL EXPOSED CORNERS AND EDGES TO BE CHAMFERED 3/4".
3. 12" DIA. WEEP HOLE REQUIRED ON ALL STRUCTURES WHICH HAVE A BOTTOM ELEVATION ABOVE THE WATER TABLE EXCEPT IN WELLFIELDS.
4. 18" SUMP REQUIRED IN ALL DRAINAGE STRUCTURES.
5. SEE BEDDING DETAIL D 3.1
6. ALL STRUCTURES TO BE 4 SIDED ANGLE SHOULDERS.

CITY of DELRAY BEACH
ENVIRONMENTAL SERVICES DEPARTMENT
434 SOUTH SWINTON AVENUE, DELRAY BEACH, FLORIDA 33444

TYPE C & E INLET DETAIL

DATE: 06-27-2014

D 7.1

WGI®
2035 Vista Parkway, West Palm Beach, FL 33411
Phone No. 866.909.2220 www.wginc.com
Cert No. 6091 - LB No. 7055

NO.	DATE	DESCRIPTION	BY
REVISIONS			

CAD	422400-CV-PDD.DWG
JOB NO.	4224.00
DRAWN BY	GAT
CHECK BY	CJH
DATE	7-16-19

ENGINEER OF RECORD
CHRISTOPHER J. HOLMES, PE
PE# 66344

HARBOUR'S EDGE PARKING IMPROVEMENTS

SITE DETAILS

SHEET:
C5.1

Grace Turner C:\pwworking\wgi\grace.turner\d1516926\422400-CV-PDD.dwg ---- Plotted: 9/18/2019 9:08:54 AM Saved: 8/27/2019 3:12:23 PM

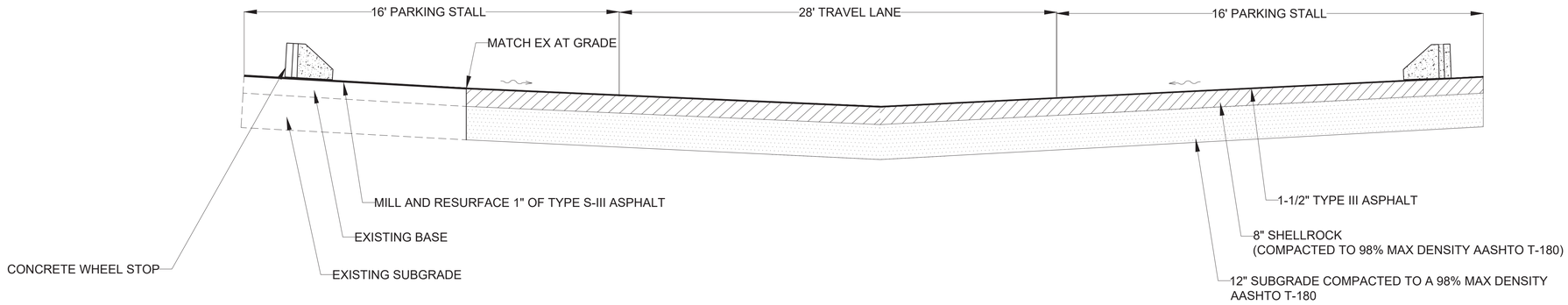

SECTION A-A

SCALE: NONE

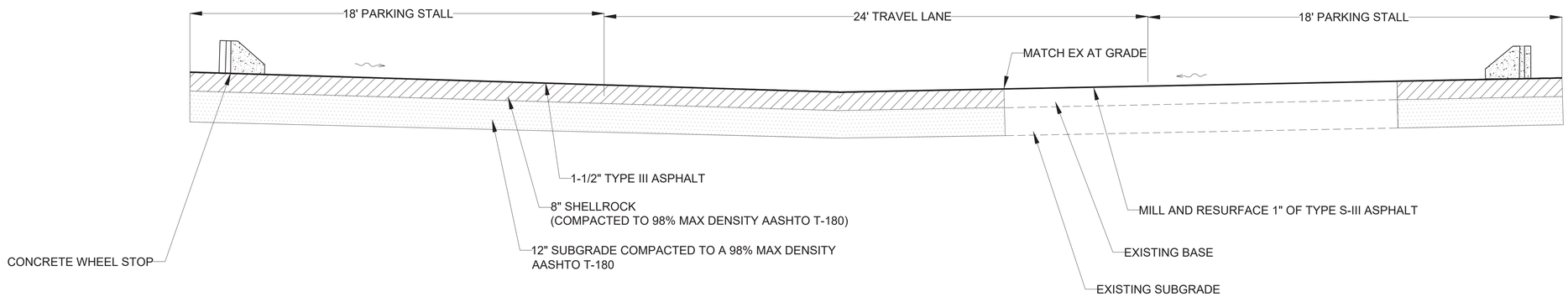

SECTION B-B

SCALE: NONE

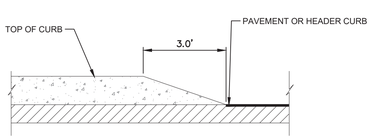

3' CURB TRANSITION

SCALE: NONE

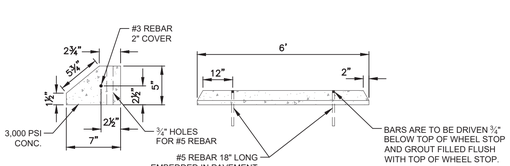

CONCRETE WHEEL STOP

SCALE: NONE

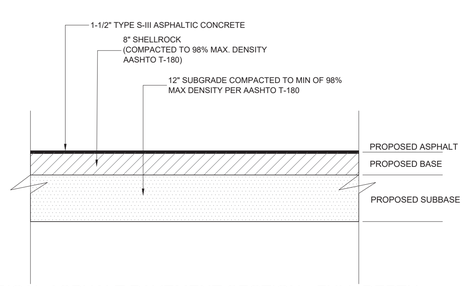

TYPICAL ASPHALT PAVEMENT SECTION - FULL DEPTH

SCALE: NONE

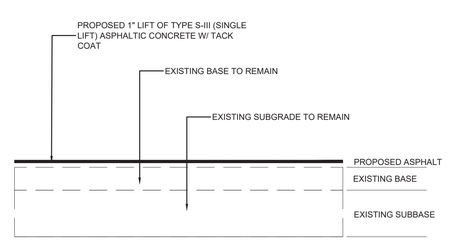

TYPICAL ASPHALT PAVEMENT SECTION - MILLING & RESURFACING

SCALE: NONE

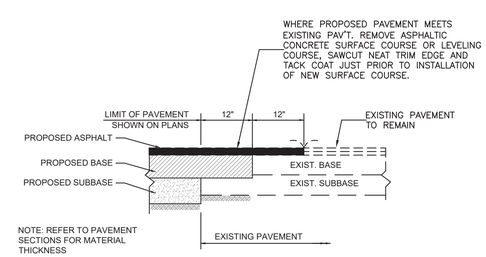

NEW PAVEMENT SECTION TO EXISTING PAVEMENT TRANSITION

SCALE: NONE

WGL®
2035 Vista Parkway, West Palm Beach, FL 33411
Phone No. 866.909.2220 www.wglinc.com
Cert No. 6091 - LB No. 7055

NO.	DATE	DESCRIPTION	BY

REVISIONS

CAD 422400-CV-PDD.DWG	
JOB NO.	4224.00
DRAWN BY	GAT
CHECK BY	CJH
DATE	7-16-19

ENGINEER OF RECORD
CHRISTOPHER J. HOLMES, PE
PE# 66344

HARBOUR'S EDGE
PARKING IMPROVEMENTS

SITE DETAILS

SHEET:
C5.2

Grace Turner C:\pwworking\grgrace\turner\d0158506\422400-CV-PDD.dwg — Plotted: 8/19/2019 9:09:02 AM Saved: 8/27/2019 3:12:23 PM

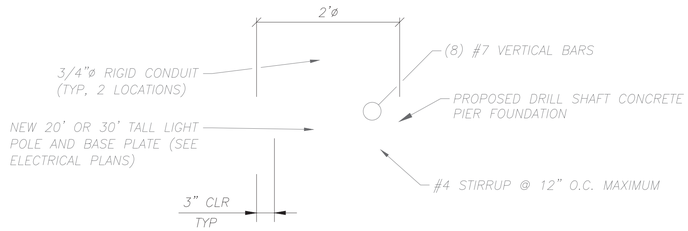

1 / C5-3 PROPOSED PIER FOUNDATION PLAN

1 0.5 0 1
GRAPHIC SCALE IN FEET

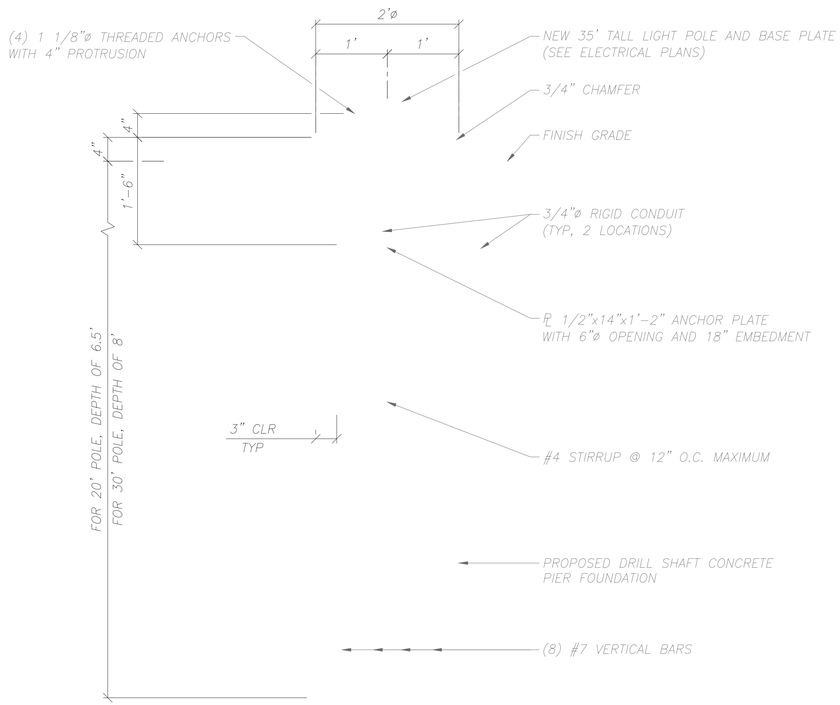

2 / C5-3 PROPOSED PIER FOUNDATION SECTION

1 0.5 0 1
GRAPHIC SCALE IN FEET

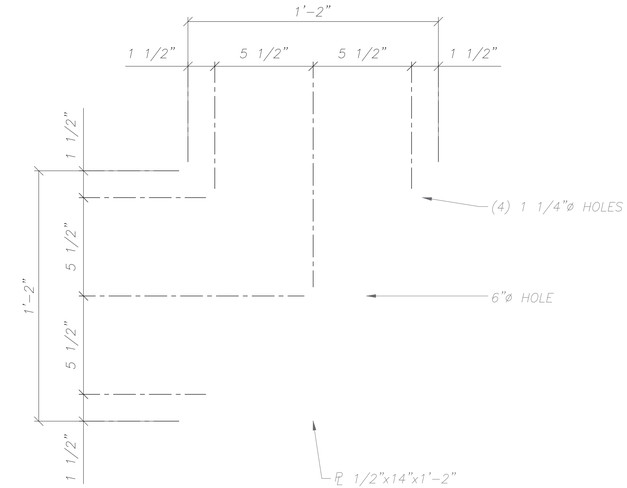

3 / C5-3 PROPOSED ANCHOR PLATE DETAIL

NOT TO SCALE

WIND LOAD CRITERIA:

WIND DESIGN PER ASCE 7-10
$VEL_{(ULT)}$ =170 MPH (3-SEC GUST)
$VEL_{(ASD)}$ =132 MPH (3-SEC GUST)

RISK CATEGORY II
EXPOSURE C

POLE
A_P = 20.6 SF
Kzt = 1.0
Kd = 0.85
G = 0.85
Cf = 1.5
qz = 58.4 PSF
$F_P = qzGCfA_P$ = 99.3 x (AREA OF LAMP/POLE) LBS

LAMP
A_L = 1.2 SF
Kz = 0.945
Kd = 0.85
G = 0.85
Cf = 1.80
qz = 63.8 PSF
$F_L = qzGCfA_L$ = 117 PSF

SOIL BEARING PRESSURES:
FOUNDATIONS ARE DESIGNED IN ACCORDANCE WITH THE FLORIDA BUILDING CODE 2017 CHAPTER 18 USING TABLE 1806 PRESUMPTIVE SOIL BEARING LOAD VALUES – MATERIAL CLASS 4

WGL®
2035 Vista Parkway, West Palm Beach, FL 33411
Phone No. 866.909.2220 www.wglnc.com
Cert No. 6091 - LB No. 7055

NO.	DATE	DESCRIPTION	BY
REVISIONS			

CAD 4224OO-CV-PPOD.DWG	
JOB NO.	4224.00
DRAWN BY	DAM
CHECK BY	JRB
DATE	7-16-19

ENGINEER OF RECORD
CHRISTOPHER J. HOLMES, PE
PE# 66344

HARBOUR'S EDGE
PARKING IMPROVEMENTS

SITE DETAILS

SHEET:
C5-3

Grace Turner C:\pwworking\wgl\grace.turner\d1516608\4224OO-CV-PPOD.dwg — Plotted: 9/18/2019 9:09:04 AM Saved: 8/27/2019 3:12:23 PM

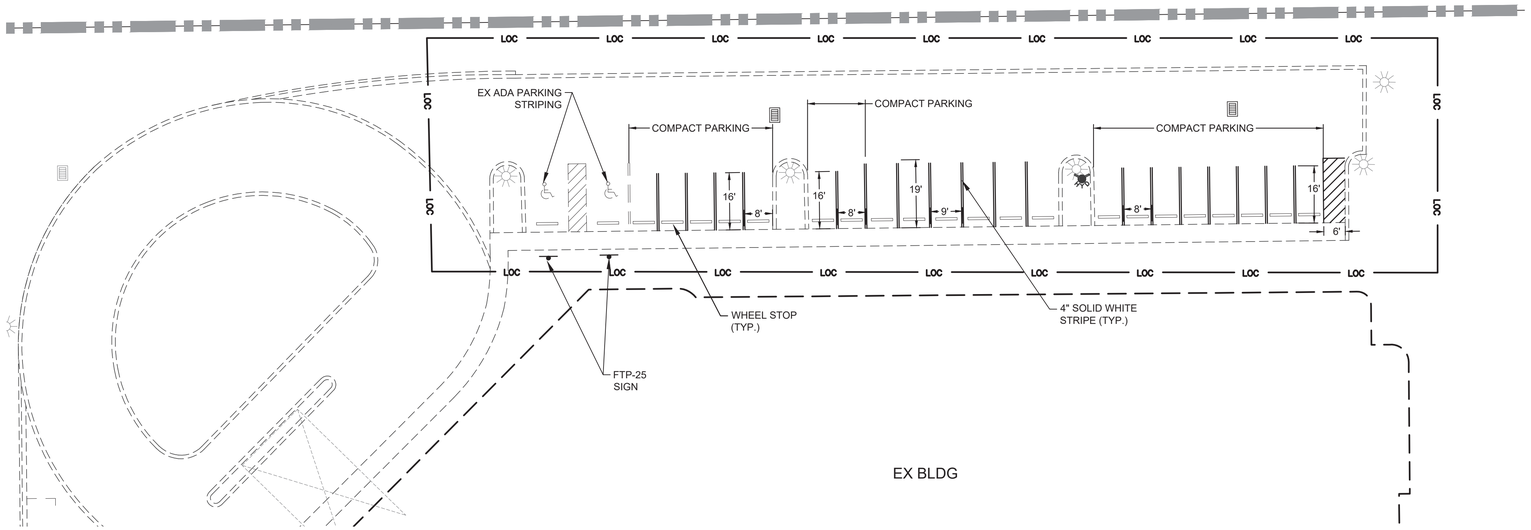

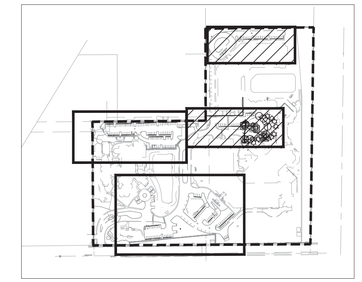

KEY MAP

NTS

N

0 10 20 40

SCALE: 1" = 20'

LEGEND

LIMITS OF CONSTRUCTION —— LOC ——

CONCRETE PAVEMENT

PAVEMENT AND MARKING NOTES

1. PAVEMENT MARKINGS - ALL PAVEMENT MARKINGS SHALL BE IN ACCORDANCE WITH THE MANUAL OF UNIFORM TRAFFIC CONTROL DEVICES FOR STREETS AND HIGHWAYS & PALM BEACH COUNTY TYPICAL NO. T-P-13.
2. CONFLICTING AND/OR MISLEADING PAVEMENT MARKINGS SHALL BE REMOVED BY WATER BLASTING. ALL EXISTING PAVEMENT MARKINGS SHALL BE REPLACED UPON COMPLETION OF THE PROJECT.
3. PAVEMENT MARKINGS SHOULD BE PLACED AS SHOWN IN THE TRAFFIC DESIGN STANDARDS.
4. ALL PAVEMENT MARKINGS AND STRIPING EXCLUDING PARKING STALLS, SHALL BE INSTALLED WITH THERMOPLASTIC MATERIALS.
5. CONTRACTOR SHALL PROVIDE NEW OR RELOCATED ADA PARKING SIGN (FTP.25) AT ALL NEW AND EXISTING ADA PARKING SPACES WITHIN LIMITS OF CONSTRUCTION.
6. ALL WHEEL STOPS FOR COMPACT SPACES SHALL BE MARKED AS "COMPACT CAR ONLY"

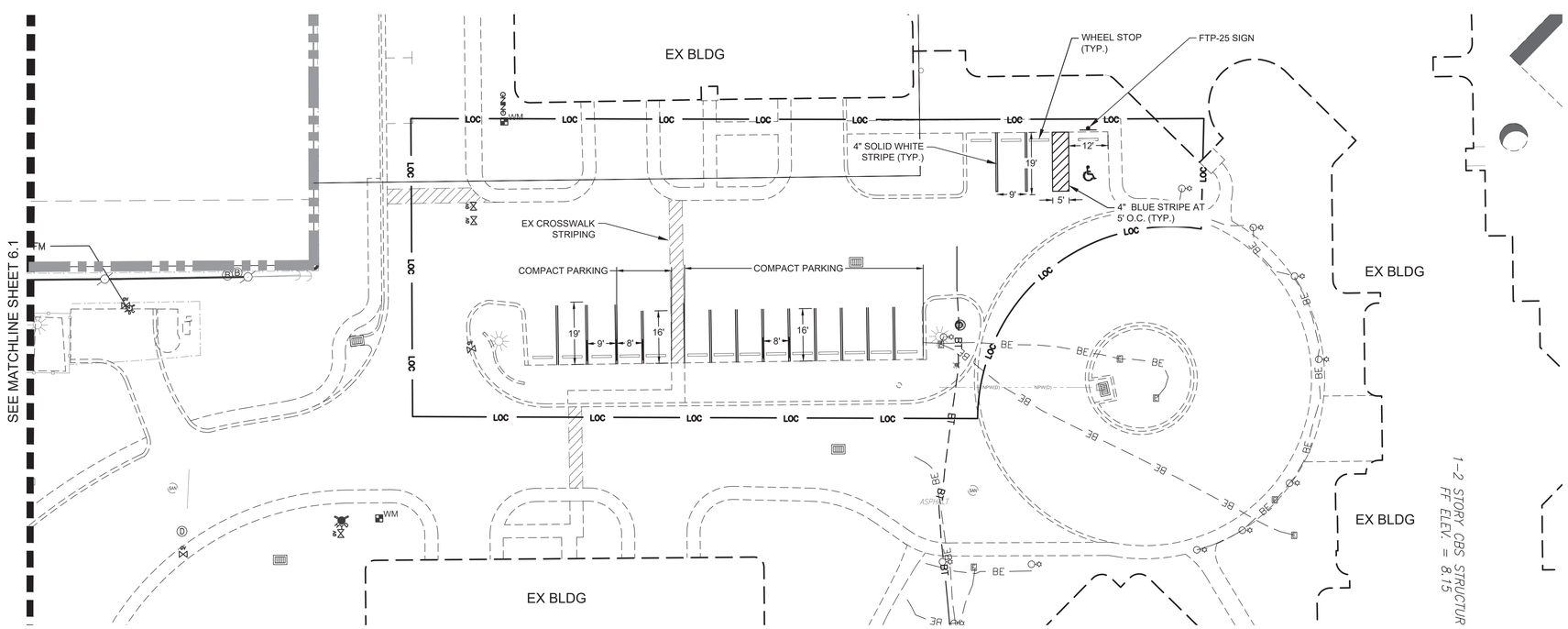

SIGN LEGEND

DESIGNATIONS USED IN THE PLANS TO INDICATE THE TYPE OF SIGN TO BE INSTALLED ARE:

1. R1-1 STOP SIGN

2. FTP-25 ADA PARKING SIGN

3. R5-1 DO NOT ENTER SIGN

WGI
2035 Vista Parkway, West Palm Beach, FL 33411
Phone No. 866.909.2220 www.wgiinc.com
Cert No. 6091 - LB No. 7055

NO.	DATE	DESCRIPTION	BY

REVISIONS

CAD 42240-O-SMP.DWG	
JOB NO.	4224.00
DRAWN BY	GAT
CHECK BY	CJH
DATE	7-16-19

ENGINEER OF RECORD
CHRISTOPHER J. HOLMES, PE
PE# 66344

HARBOUR'S EDGE PARKING IMPROVEMENTS

SIGNING AND PAVEMENT MARKING PLAN

SHEET:
C6.0

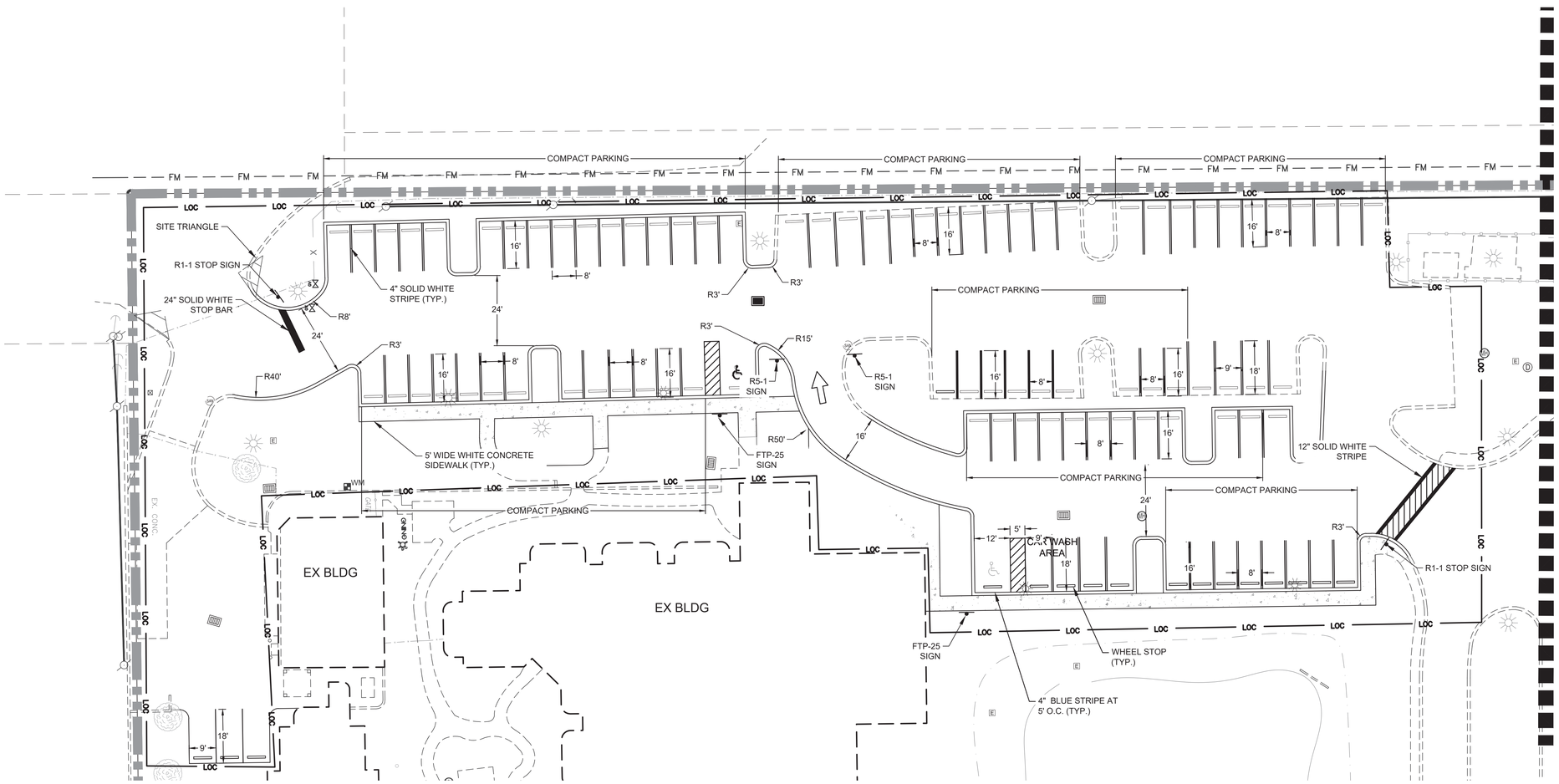

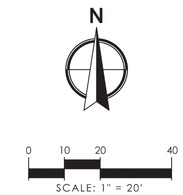

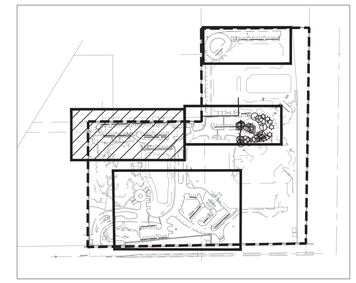

KEY MAP
NTS

LEGEND

LIMITS OF CONSTRUCTION — LOC —

CONCRETE PAVEMENT

SIGN LEGEND

DESIGNATIONS USED IN THE PLANS TO INDICATE THE TYPE OF SIGN TO BE INSTALLED ARE:

1. R1-1 STOP SIGN

2. FTP-25 ADA PARKING SIGN

3. R5-1 DO NOT ENTER SIGN

PAVEMENT AND MARKING NOTES

1. PAVEMENT MARKINGS - ALL PAVEMENT MARKINGS SHALL BE IN ACCORDANCE WITH THE MANUAL OF UNIFORM TRAFFIC CONTROL DEVICES FOR STREETS AND HIGHWAYS & PALM BEACH COUNTY TYPICAL NO. T-P-13.
2. CONFLICTING AND/OR MISLEADING PAVEMENT MARKINGS SHALL BE REMOVED BY WATER BLASTING. ALL EXISTING PAVEMENT MARKINGS SHALL BE REPLACED UPON COMPLETION OF THE PROJECT.
3. PAVEMENT MARKINGS SHOULD BE PLACED AS SHOWN IN THE TRAFFIC DESIGN STANDARDS.
4. ALL PAVEMENT MARKINGS AND STRIPING EXCLUDING PARKING STALLS, SHALL BE INSTALLED WITH THERMOPLASTIC MATERIALS.
5. CONTRACTOR SHALL PROVIDE NEW OR RELOCATED ADA PARKING SIGN (FTP.25) AT ALL NEW AND EXISTING ADA PARKING SPACES WITHIN LIMITS OF CONSTRUCTION.
6. ALL WHEEL STOPS FOR COMPACT SPACES SHALL BE MARKED AS "COMPACT CAR ONLY"

WGI
2035 Vista Parkway, West Palm Beach, FL 33411
Phone No. 866.909.2220 www.wgiinc.com
Cert No. 6091 - LB No. 7055

NO.	DATE	DESCRIPTION	BY

REVISIONS

CAD 42240-CV-SMP.DWG	
JOB NO.	4224.00
DRAWN BY	GAT
CHECK BY	CJH
DATE	7-16-19

ENGINEER OF RECORD
CHRISTOPHER J. HOLMES, PE
PE# 66344

HARBOUR'S EDGE PARKING IMPROVEMENTS

SIGNING AND PAVEMENT MARKING PLAN

SHEET:
C6.1

Chris Holmes C:\pwworking\grp0nhs\chholmes\d1516506\42240-C1-SMP.dwg — Plotted: 9/23/2019 2:06:10 PM, Saved: 9/18/2019 9:05:35 AM

SIGN LEGEND

DESIGNATIONS USED IN THE PLANS TO INDICATE THE TYPE OF SIGN TO BE INSTALLED ARE:

① R1-1 STOP SIGN

② FTP-25 ADA PARKING SIGN

③ R5-1 DO NOT ENTER SIGN

PAVEMENT AND MARKING NOTES:

1. PAVEMENT MARKINGS - ALL PAVEMENT MARKINGS SHALL BE IN ACCORDANCE WITH THE MANUAL OF UNIFORM TRAFFIC CONTROL DEVICES FOR STREETS AND HIGHWAYS & PALM BEACH COUNTY TYPICAL NO. T-P-13.
2. CONFLICTING AND/OR MISLEADING PAVEMENT MARKINGS SHALL BE REMOVED BY WATER BLASTING. ALL EXISTING PAVEMENT MARKINGS SHALL BE REPLACED UPON COMPLETION OF THE PROJECT.
3. PAVEMENT MARKINGS SHOULD BE PLACED AS SHOWN IN THE TRAFFIC DESIGN STANDARDS.
4. ALL PAVEMENT MARKINGS AND STRIPING EXCLUDING PARKING STALLS, SHALL BE INSTALLED WITH THERMOPLASTIC MATERIALS.
5. CONTRACTOR SHALL PROVIDE NEW OR RELOCATED ADA PARKING SIGN (FTP.25) AT ALL NEW AND EXISTING ADA PARKING SPACES WITHIN LIMITS OF CONSTRUCTION.
6. ALL WHEEL STOPS FOR COMPACT SPACES SHALL BE MARKED AS "COMPACT CAR ONLY"

LEGEND

LIMITS OF CONSTRUCTION — LOC —

CONCRETE PAVEMENT

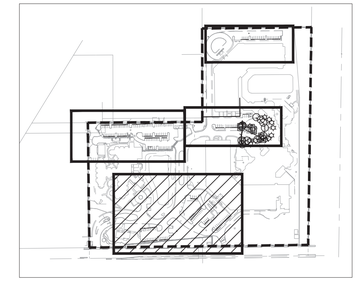

KEY MAP
NTS

N

0 10 20 40
SCALE: 1" = 20'

WGI
2035 Vista Parkway, West Palm Beach, FL 33411
Phone No. 866.909.2220 www.wginc.com
Cert No. 6091 - LB No. 7055

NO.	DATE	DESCRIPTION	BY
		REVISIONS	

CAD 422400-CV-SMP.DWG	
JOB NO.	4224.00
DRAWN BY	GAT
CHECK BY	CJH
DATE	7-16-19

ENGINEER OF RECORD
CHRISTOPHER J. HOLMES, PE
PE# 66344

HARBOUR'S EDGE PARKING IMPROVEMENTS

SIGNING AND PAVEMENT MARKING PLAN

SHEET:
C6.2

Chris Holmes C:\pwworking\gridphoto\admin\d1518\00422400\CV-SMP.dwg — Plotted: 9/23/2019 2:04:19 PM Saved: 9/18/2019 9:05:35 AM