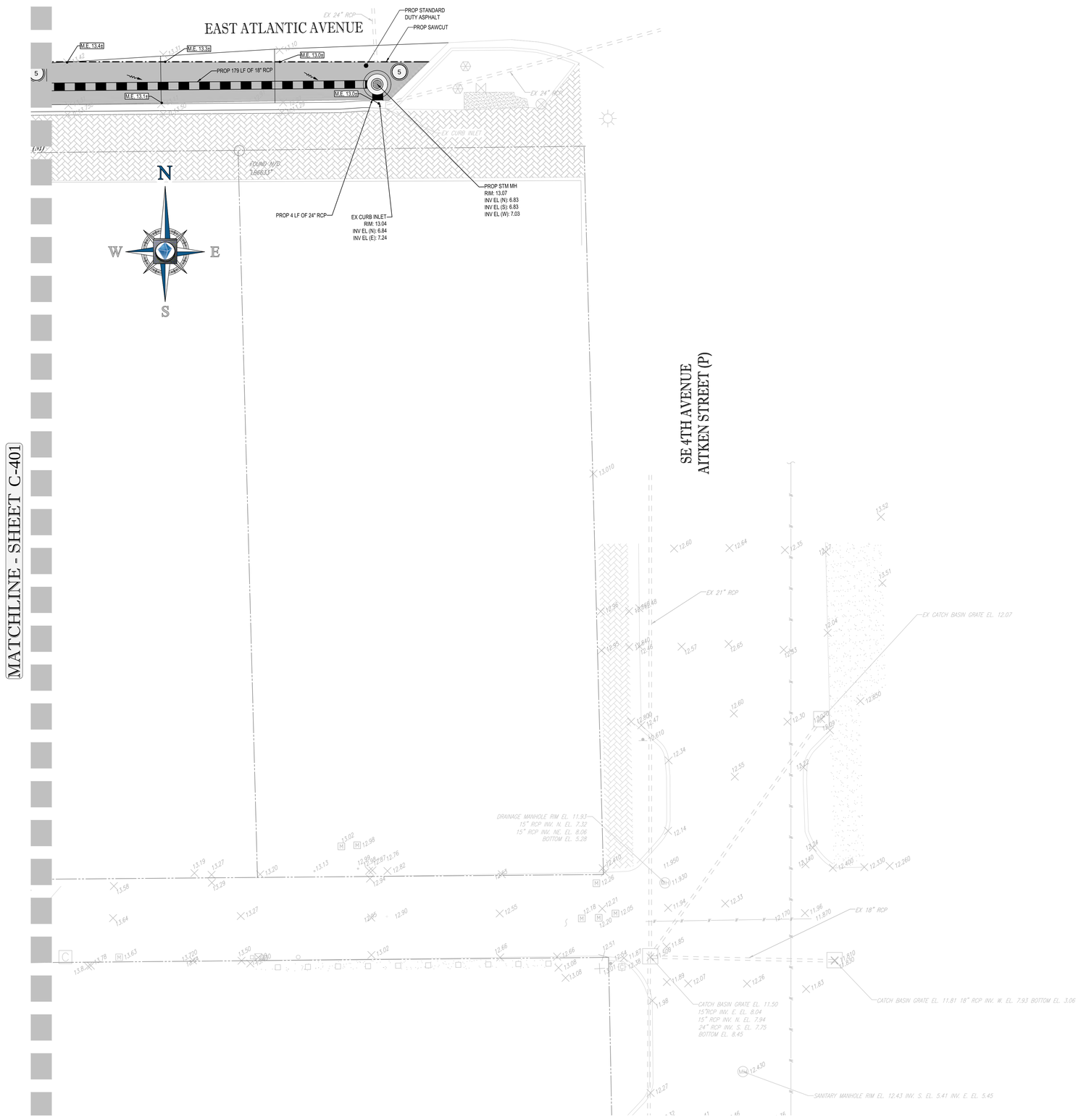

LEGEND:

- EX PROPERTY BOUNDARY LINES
- PROP PROPERTY BOUNDARY LINES
- EX STORM SEWER PIPE
- EX SPOT GRADE
- PROP SPOT GRADE
- PROP STANDARD ASPHALT
- PROP STANDARD CONCRETE
- PROP DRAINAGE ARROW
- PROP RIDGE LINE
- PROP DRAINAGE PIPE
- PROP STORM STRUCTURE

PAVING AND GRADING NOTES:

A. GENERAL:

1. ALL ELEVATIONS SHOWN ARE IN REFERENCE TO THE SURVEYOR'S BENCHMARKS AND MUST BE VERIFIED BY THE GENERAL CONTRACTOR PRIOR TO GROUNDBREAK.
2. ALL GRADES SHOWN REFERENCE PROPOSED ELEVATIONS AT EDGE OF PAVEMENT, UNLESS OTHERWISE NOTED. "TC" = TOP OF CURB ELEVATION; "BC" = BOTTOM OF CURB ELEVATION (EDGE OF PAVEMENT); "MATCH" = PROPOSED GRADE TO MATCH EXISTING GRADE; T/W = TOP OF RETAINING WALL ELEVATION; B/W = BOTTOM OF RETAINING WALL ELEVATION.
3. THE ALTA/ACSM LAND TITLE SURVEY SHALL BE CONSIDERED A PART OF THESE PLANS.
4. THE GEOTECHNICAL REPORT AND RECOMMENDATIONS SET FORTH THEREIN ARE A PART OF THE REQUIRED CONSTRUCTION DOCUMENTS AND IN CASE OF CONFLICT SHALL TAKE PRECEDENCE UNLESS SPECIFICALLY NOTED OTHERWISE ON THE PLANS. THE CONTRACTOR SHALL NOTIFY THE ENGINEER IN WRITING OF ANY SUCH DISCREPANCY BETWEEN GEOTECHNICAL REPORT AND PLANS, ETC.
5. ALL UNDERGROUND UTILITIES SHALL BE COMPLETED PRIOR TO CONSTRUCTION OF LIMEROCK BASE.
6. ALL EXISTING PAVEMENT, CUT OR DAMAGED BY CONSTRUCTION, SHALL BE PROPERLY RESTORED AT THE CONTRACTOR'S EXPENSE.
7. WHERE ANY PROPOSED PAVEMENT IS TO BE CONNECTED TO EXISTING PAVEMENT, THE EXISTING EDGE OF PAVEMENT SHALL BE SAW CUT TO ENSURE A PROPER JOINT.
8. PRIOR TO THEIR CONSTRUCTION OR INSTALLATION, SHOP DRAWINGS SHALL BE SUBMITTED TO AND APPROVED BY THE ENGINEER OF RECORD. IT IS THE RESPONSIBILITY OF THE CONTRACTOR TO OBTAIN ALL OTHER AGENCY APPROVALS IF REQUIRED.

B. MATERIALS:

1. REINFORCED CONCRETE SLABS SHALL BE CONSTRUCTED OF CLASS I CONCRETE WITH A MINIMUM STRENGTH OF 4,000 PSI AND SHALL BE REINFORCED WITH A 6" x 6" NO. 6 GAUGE WIRE MESH.

C. INSTALLATION:

1. SUBGRADE FOR ROADWAY SHALL BE COMPACTED TO A MINIMUM OF 98% OF THE MAXIMUM DENSITY (AASHTO T-180), TO A MIN. 12" AND SHALL HAVE A MINIMUM LBR 40.
2. BASE COURSE MATERIAL FOR PAVED AREAS SHALL BE A MINIMUM THICKNESS OF 6" PLACED IN ONE LIFT. BASE COURSE MATERIAL SHALL HAVE A MINIMUM MARSHALL STABILITY OF 1000, UNLESS OTHERWISE INDICATED (OR LBR-100).
3. BASE COURSE SHALL BE COMPACTED TO 98% OF THE MAXIMUM DENSITY AS PER AASHTO T-180.
4. INSTALLATION OF THE WEARING SURFACE SHALL CONFORM WITH THE REQUIREMENTS OF THE D.O.T. STANDARD SPECIFICATIONS FOR TYPE S-III ASPHALTIC CONCRETE OR THE LATEST REVISION.

D. TESTING

1. THE FINISHED SURFACE OF THE BASE COURSE AND THAT OF THE WEARING SURFACE SHALL NOT VARY MORE THAN 1/4" FROM THE TEMPLATE. ANY IRREGULARITIES EXCEEDING THIS LIMIT SHALL BE CORRECTED.
2. DENSITY TESTS SHALL BE TAKEN BY AN INDEPENDENT TESTING LABORATORY CERTIFIED BY THE STATE OF FLORIDA, WHERE DIRECTED BY THE ENGINEER.
3. ALL TESTING COSTS (PAVING) SHALL BE PAID FOR BY THE CONTRACTOR.
4. DENSITY TESTS ON THE STABILIZED SUBGRADE SHALL BE SUPPLIED TO THE ENGINEER OF RECORD AND GEOTECHNICAL ENGINEER, AND APPROVED BEFORE ANY BASE IS CONSTRUCTED.
5. DENSITY TESTS AND "AS-BUILTS" ON THE FINISHED BASE SHALL BE SUPPLIED TO THE GEOTECHNICAL ENGINEER, AND APPROVED BEFORE ANY ASPHALT PAVEMENT IS CONSTRUCTED.

DATUM NOTE:

ELEVATIONS SHOWN HEREON ARE IN NORTH AMERICAN VERTICAL DATUM OF 1988.

10 5 2.5 0 10
1"= 10'

BOHLER™ ENGINEERING
SITE CIVIL AND CONSULTING ENGINEERING
LAND SURVEYING
PROGRAM MANAGEMENT
LANDSCAPE ARCHITECTURE
SUSTAINABLE DESIGN
PERMITTING SERVICES
TRANSPORTATION SERVICES

"IN ACCEPTANCE, USE AND CONTENT OF THIS PLAN, THE CONTRACTOR AND ENGINEER AGREE THAT THE CONTRACTOR WILL NOT USE, REPRODUCE OR ALLOW USE OR REPRODUCTION OF THIS PLAN WITHOUT WRITTEN AUTHORIZATION FROM BOHLER ENGINEERING. ONLY PLANS BEARING THE ORIGINAL SEAL AND SIGNATURE OF THE ENGINEER OF RECORD SHALL BE UTILIZED FOR CONSTRUCTION PURPOSES."

REVISIONS

REV	DATE	COMMENT	DRAWN BY / CHECKED BY
1	2019-08-23	CITY OF DELRAY BEACH COMMENTS	LJL / AS
2	2019-09-10	SPRAB COMMENTS	LJL / AS

THIS DRAWING IS INTENDED FOR MUNICIPAL AND/OR AGENCY REVIEW AND APPROVAL. IT IS NOT INTENDED AS A CONSTRUCTION DOCUMENT UNLESS INDICATED OTHERWISE.

811 Know what's below. Call before you dig.
ALWAYS CALL 811
It's fast. It's free. It's the law.

ISSUED FOR MUNICIPAL & AGENCY REVIEW & APPROVAL

PROJECT No.:	FLB180120
DRAWN BY:	LJL
CHECKED BY:	AS
DATE:	2019-10-25
CAD I.D.:	FLB180120-GDP-1

PROJECT:
PIERRE DELRAY PHASE 1 - SPRAB SITE PLAN PACKAGE (AKA SUNTRUST BUILDING)

FOR

CLIENT
ZYSCOVICH ARCHITECTS

PROPOSED DEVELOPMENT
302 E ATLANTIC AVE
PALM BEACH COUNTY
DELRAY BEACH, FL

BOHLER ENGINEERING
2255 GLADES ROAD, SUITE 305E
BOCA RATON, FLORIDA 33431
Phone: (561) 571-0280
Fax: (561) 571-0281
FLORIDA BUSINESS CERT. OF AUTH. No. 30780
LANDSCAPE ARCHITECT BUSINESS LIC. No LC26000551

SHEET TITLE:
PAVING, GRADING AND DRAINAGE PLAN

SHEET NUMBER:
C-402

REVISION 2 - 2019-09-10

LEGEND:

- EX PROPERTY BOUNDARY LINES
- PROP PROPERTY BOUNDARY LINES
- EX STORM SEWER PIPE
- EX SPOT GRADE
- PROP SPOT GRADE
- PROP STANDARD ASPHALT
- PROP STANDARD CONCRETE
- PROP DRAINAGE ARROW
- PROP RIDGE LINE
- PROP DRAINAGE PIPE
- PROP STORM STRUCTURE

PAVING AND GRADING NOTES:

A. GENERAL:

1. ALL ELEVATIONS SHOWN ARE IN REFERENCE TO THE SURVEYOR'S BENCHMARKS AND MUST BE VERIFIED BY THE GENERAL CONTRACTOR PRIOR TO GROUNDBREAK.
2. ALL GRADES SHOWN REFERENCE PROPOSED ELEVATIONS AT EDGE OF PAVEMENT, UNLESS OTHERWISE NOTED. "TC" = TOP OF CURB ELEVATION; "BC" = BOTTOM OF CURB ELEVATION (EDGE OF PAVEMENT); "MATCH" = PROPOSED GRADE TO MATCH EXISTING GRADE; T/W = TOP OF RETAINING WALL ELEVATION; B/W = BOTTOM OF RETAINING WALL ELEVATION.
3. THE ALTA/ACSM LAND TITLE SURVEY SHALL BE CONSIDERED A PART OF THESE PLANS.
4. THE GEOTECHNICAL REPORT AND RECOMMENDATIONS SET FORTH THEREIN ARE A PART OF THE REQUIRED CONSTRUCTION DOCUMENTS AND IN CASE OF CONFLICT SHALL TAKE PRECEDENCE UNLESS SPECIFICALLY NOTED OTHERWISE ON THE PLANS. THE CONTRACTOR SHALL NOTIFY THE ENGINEER IN WRITING OF ANY SUCH DISCREPANCY BETWEEN GEOTECHNICAL REPORT AND PLANS, ETC.
5. ALL UNDERGROUND UTILITIES SHALL BE COMPLETED PRIOR TO CONSTRUCTION OF LIMEROCK BASE.
6. ALL EXISTING PAVEMENT, CUT OR DAMAGED BY CONSTRUCTION, SHALL BE PROPERLY RESTORED AT THE CONTRACTOR'S EXPENSE.
7. WHERE ANY PROPOSED PAVEMENT IS TO BE CONNECTED TO EXISTING PAVEMENT, THE EXISTING EDGE OF PAVEMENT SHALL BE SAW CUT TO ENSURE A PROPER JOINT.
8. PRIOR TO THEIR CONSTRUCTION OR INSTALLATION, SHOP DRAWINGS SHALL BE SUBMITTED TO AND APPROVED BY THE ENGINEER OF RECORD. IT IS THE RESPONSIBILITY OF THE CONTRACTOR TO OBTAIN ALL OTHER AGENCY APPROVALS IF REQUIRED.

B. MATERIALS:

1. REINFORCED CONCRETE SLABS SHALL BE CONSTRUCTED OF CLASS I CONCRETE WITH A MINIMUM STRENGTH OF 4,000 PSI AND SHALL BE REINFORCED WITH A 6" x 6" NO. 6 GAUGE WIRE MESH.

C. INSTALLATION:

1. SUBGRADE FOR ROADWAY SHALL BE COMPACTED TO A MINIMUM OF 98% OF THE MAXIMUM DENSITY (AASHTO T-180), TO A MIN. 12" AND SHALL HAVE A MINIMUM LBR 40.
2. BASE COURSE MATERIAL FOR PAVED AREAS SHALL BE A MINIMUM THICKNESS OF 6" PLACED IN ONE LIFT. BASE COURSE MATERIAL SHALL HAVE A MINIMUM MARSHALL STABILITY OF 1000, UNLESS OTHERWISE INDICATED (OR LBR-100).
3. BASE COURSE SHALL BE COMPACTED TO 98% OF THE MAXIMUM DENSITY AS PER AASHTO T-180.
4. INSTALLATION OF THE WEARING SURFACE SHALL CONFORM WITH THE REQUIREMENTS OF THE D.O.T. STANDARD SPECIFICATIONS FOR TYPE S-III ASPHALTIC CONCRETE OR THE LATEST REVISION.

D. TESTING

1. THE FINISHED SURFACE OF THE BASE COURSE AND THAT OF THE WEARING SURFACE SHALL NOT VARY MORE THAN 1/4" FROM THE TEMPLATE. ANY IRREGULARITIES EXCEEDING THIS LIMIT SHALL BE CORRECTED.
2. DENSITY TESTS SHALL BE TAKEN BY AN INDEPENDENT TESTING LABORATORY CERTIFIED BY THE STATE OF FLORIDA, WHERE DIRECTED BY THE ENGINEER.
3. ALL TESTING COSTS (PAVING) SHALL BE PAID FOR BY THE CONTRACTOR.
4. DENSITY TESTS ON THE STABILIZED SUBGRADE SHALL BE SUPPLIED TO THE ENGINEER OF RECORD AND GEOTECHNICAL ENGINEER, AND APPROVED BEFORE ANY BASE IS CONSTRUCTED.
5. DENSITY TESTS AND "AS-BUILTS" ON THE FINISHED BASE SHALL BE SUPPLIED TO THE GEOTECHNICAL ENGINEER, AND APPROVED BEFORE ANY ASPHALT PAVEMENT IS CONSTRUCTED.

DATUM NOTE:

ELEVATIONS SHOWN HEREON ARE IN NORTH AMERICAN VERTICAL DATUM OF 1988.

10 5 2.5 0 10
1"= 10'

BOHLER™ ENGINEERING
SITE CIVIL AND CONSULTING ENGINEERING
LAND SURVEYING
PROGRAM MANAGEMENT
LANDSCAPE ARCHITECTURE
SUSTAINABLE DESIGN
PERMITTING SERVICES
TRANSPORTATION SERVICES

"IN ACCEPTANCE, DESIGN AND CONTENT OF THIS PLAN THE ENGINEER DOES NOT BE EXPRESS OR IMPLIED CLAIMS OR GIVE WARRANTY WITHOUT WRITTEN AUTHORIZATION FROM BOHLER ENGINEERING. ONLY THE ORIGINAL SEALED PLANS SHALL BE UTILIZED FOR CONSTRUCTION PURPOSES

REVISIONS

REV	DATE	COMMENT	DRAWN BY / CHECKED BY
1	2019-08-23	CITY OF DELRAY BEACH COMMENTS	LJL / AS
2	2019-09-10	SPRAB COMMENTS	LJL / AS

THIS DRAWING IS INTENDED FOR MUNICIPAL AND/OR AGENCY REVIEW AND APPROVAL. IT IS NOT INTENDED AS A CONSTRUCTION DOCUMENT UNLESS INDICATED OTHERWISE.

811 Know what's below. Call before you dig.

ALWAYS CALL 811

It's fast. It's free. It's the law.

ISSUED FOR MUNICIPAL & AGENCY REVIEW & APPROVAL

PROJECT No.:	FLB180120
DRAWN BY:	LJL
CHECKED BY:	AS
DATE:	2019-10-25
CAD I.D.:	FLB180120-GDP-1

PROJECT:

PIERRE DELRAY PHASE 1 - SPRAB SITE PLAN PACKAGE (AKA SUNTRUST BUILDING)

FOR

CLIENT

ZYSCOVICH ARCHITECTS

PROPOSED DEVELOPMENT

302 E ATLANTIC AVE
PALM BEACH COUNTY
DELRAY BEACH, FL

BOHLER ENGINEERING
2255 GLADES ROAD, SUITE 305E
BOCA RATON, FLORIDA 33431
Phone: (561) 571-0280
Fax: (561) 571-0281
FLORIDA BUSINESS CERT. OF AUTH. No. 30780
LANDSCAPE ARCHITECT BUSINESS LIC. NO LC26000551

SHEET TITLE:

PAVING, GRADING AND DRAINAGE PLAN

SHEET NUMBER:

C-403

REVISION 2 - 2019-09-10

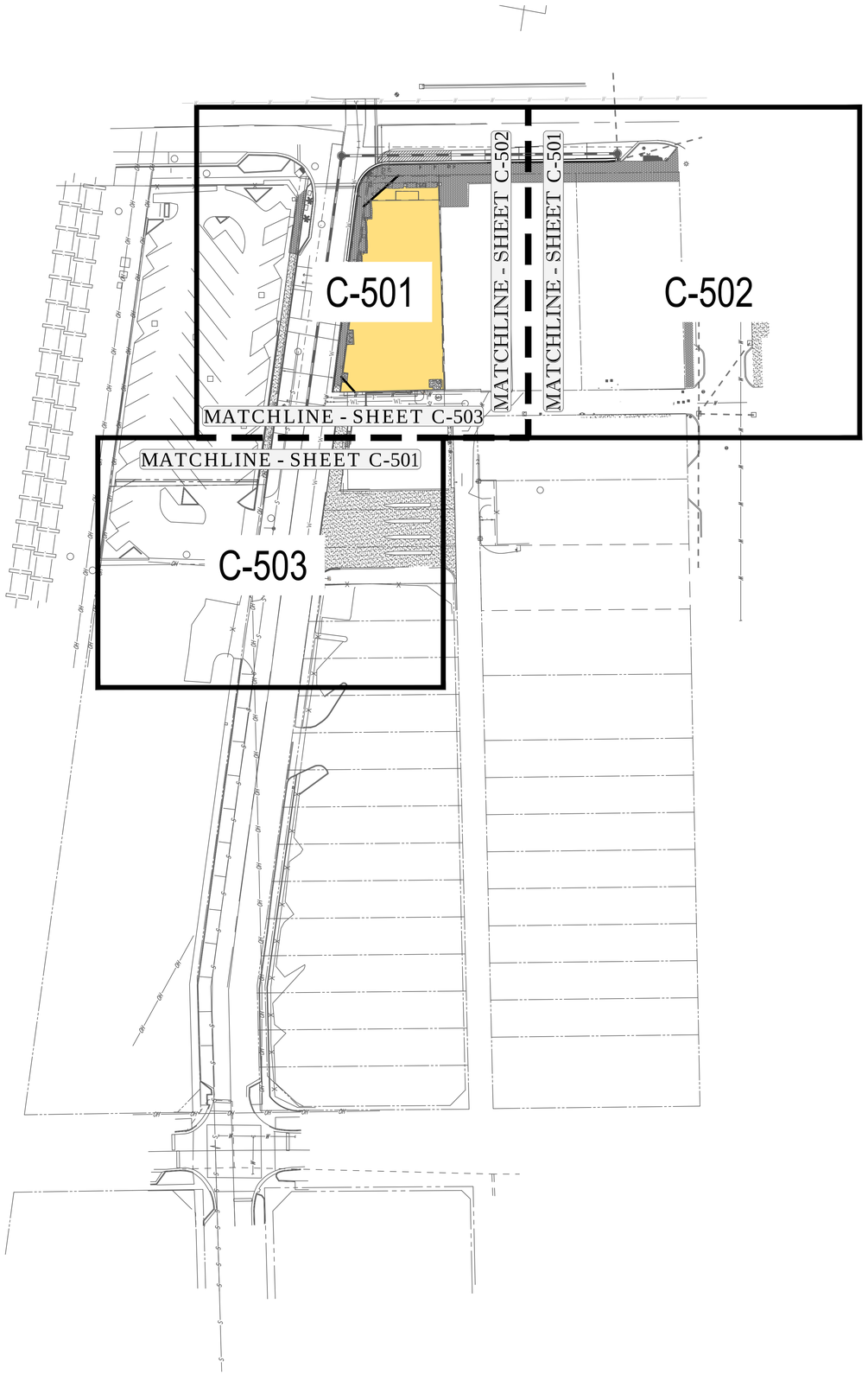

40 20 10 0 40
1"= 40'

BOHLER ENGINEERING

SITE CIVIL AND CONSULTING ENGINEERING
LAND SURVEYING
PROGRAM MANAGEMENT
LANDSCAPE ARCHITECTURE
SUSTAINABLE DESIGN
PERMITTING SERVICES
TRANSPORTATION SERVICES

THE INFORMATION, DESIGN AND CONTENT OF THIS PLAN ARE PROPRIETARY AND SHALL NOT BE COPIED OR USED FOR ANY PURPOSE WITHOUT PRIOR WRITTEN AUTHORIZATION FROM BOHLER ENGINEERING, INC. ALL REPRODUCTIONS, COPIES OR USES OF THIS PLAN AND ANY SUPPORTING DATA SHALL BE LIMITED TO THOSE EXPRESSLY AUTHORIZED BY BOHLER ENGINEERING, INC.

REVISIONS

REV	DATE	COMMENT	DRAWN BY / CHECKED BY
1	2019-08-23	CITY OF DELRAY BEACH COMMENTS	LJL / AS
2	2019-09-10	SPRAB COMMENTS	LJL / AS

THIS DRAWING IS INTENDED FOR MUNICIPAL AND/OR AGENCY REVIEW AND APPROVAL. IT IS NOT INTENDED AS A CONSTRUCTION DOCUMENT UNLESS INDICATED OTHERWISE.

811 Know what's below. Call before you dig.

ALWAYS CALL 811

It's fast. It's free. It's the law.

ISSUED FOR MUNICIPAL & AGENCY REVIEW & APPROVAL

PROJECT No.:	FLB180120
DRAWN BY:	LJL
CHECKED BY:	AS
DATE:	2019-10-25
CAD I.D.:	FLB180120-UTP-1

PROJECT:

PIERRE DELRAY PHASE 1 - SPRAB SITE PLAN PACKAGE (AKA SUNTRUST BUILDING)

FOR

CLIENT

ZYSCOVICH ARCHITECTS

PROPOSED DEVELOPMENT

302 E ATLANTIC AVE
PALM BEACH COUNTY
DELRAY BEACH, FL

BOHLER ENGINEERING
2255 GLADES ROAD, SUITE 305E
BOCA RATON, FLORIDA 33431
Phone: (561) 571-0280
Fax: (561) 571-0281
FLORIDA BUSINESS CERT. OF AUTH. No. 30780
LANDSCAPE ARCHITECT BUSINESS LIC. No LC26000551

SHEET TITLE:

UTILITY PLAN KEY SHEET

SHEET NUMBER:

C-500

REVISION 2 - 2019-09-10

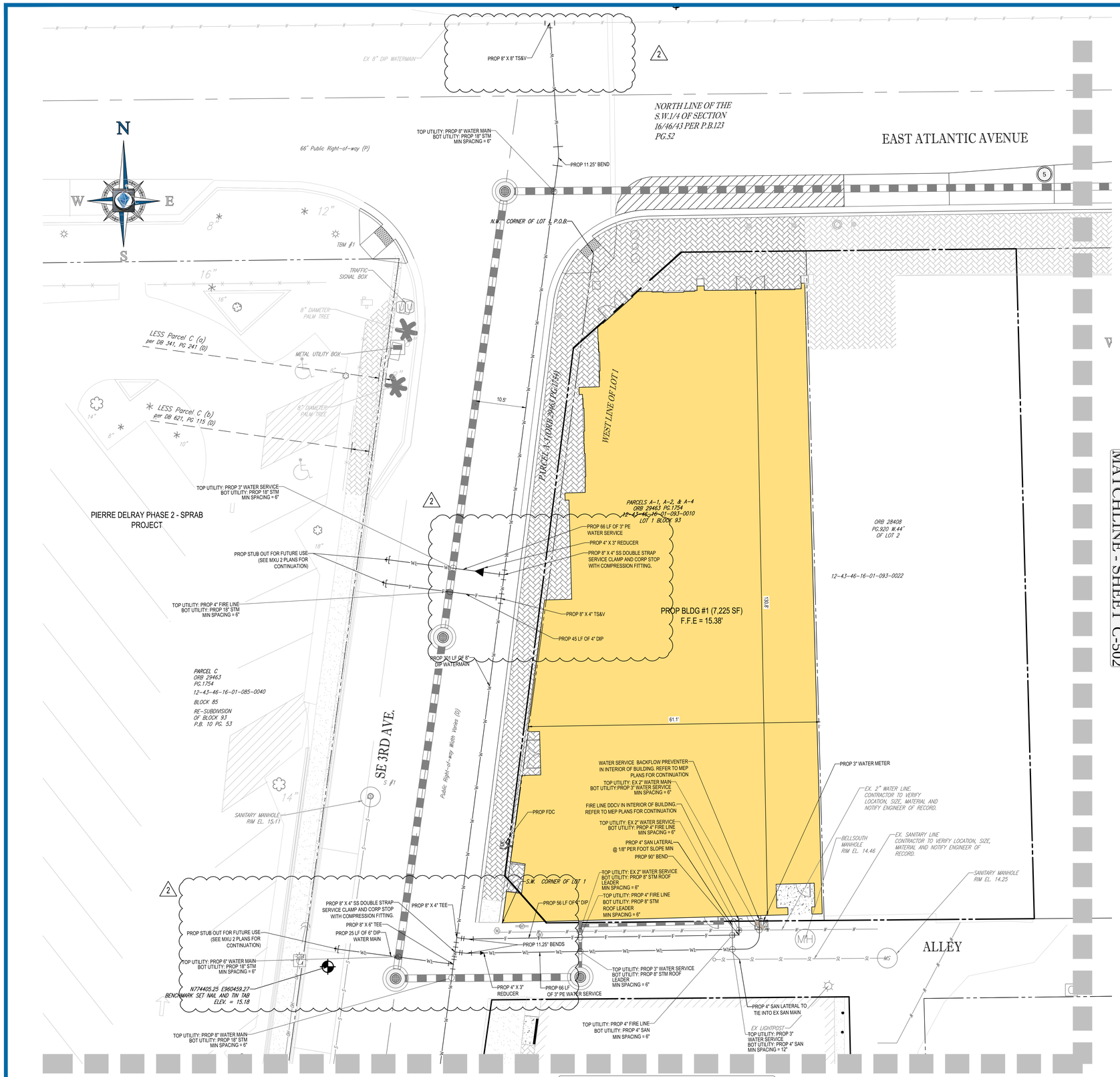

LEGEND:

- EX PROPERTY BOUNDARY LINES
- EX ADJACENT BOUNDARY LINES
- PROP PROPERTY BOUNDARY LINES
- EX STORM WATER LINE
- EX SANITARY SEWER LINE
- PROP UTILITY EASEMENT
- PROP SANITARY LINE
- PROP SANITARY LATERAL
- PROP WATER LINE
- PROP FIRE LINE
- PROP WATER SERVICE
- PROP ELECTRIC LINE
- PROP STORM SEWER
- PROP STORM STRUCTURES
- PROP SANITARY STRUCTURE

WATER DISTRIBUTION NOTES:

1. CONTRACTOR SHALL FOLLOW GUIDELINES AND PROCEDURES OUTLINED BY UTILITY PROVIDER, AND HAVE UTILITY PROVIDER'S MANUAL ON-SITE AT ALL TIMES. THIS POLICY MANUAL SHALL BE CONSIDERED PART OF THE CONSTRUCTION DOCUMENTS AS IT PERTAINS TO APPROVED MATERIALS, INSTALLATION METHODS, INSPECTION NOTIFICATION AND AS-BUILT/PROJECT CLOSEOUT REQUIREMENTS.
2. ALL HIGH DENSITY POLYETHYLENE PIPE AND FITTINGS SHALL MEET THE REQUIREMENTS OF AASHTO M - 294 LATEST REVISIONS. ALL PIPING TO BE NON-PERFORATED TUBING.
3. ALL PVC PIPE SHALL BE C900(SDR), AND ALL DIP PIPE SHALL BE C151 CLASS.
4. ALL WATER AND SEWER SYSTEM MATERIALS AND CONSTRUCTION SHALL BE IN ACCORDANCE WITH CITY OF DELRAY BEACH STANDARDS.
5. WATER AND SEWER MAIN HORIZONTAL AND VERTICAL SEPARATIONS SHALL COMPLY WITH PALM BEACH COUNTY CRITERIA/REQUIREMENTS, UNLESS OTHERWISE AGREED UPON BY THE CITY IN ADVANCE OF ANY APPLICABLE FIELD INSTALLATIONS.
6. ALL WATER MAINS SHALL BE INSTALLED WITH A MINIMUM PIPE COVER OF 36 INCHES FOR PVC AND 30 INCHES FOR DIP.
7. ALL DISINFECTION SHALL MEET DISINFECTION SPECS. (C651- 05) OR LATEST REVISION.
8. NO BENEFICIAL USE SHALL BE MADE OF THE PROPOSED WATER MAINS TO BE INSTALLED PER THIS PERMIT WITHOUT WRITTEN APPROVAL FROM THE FLORIDA DEPARTMENT OF HEALTH IN PALM BEACH COUNTY.
9. MIN. 12" VERTICAL SEPARATION REQUIRED BETWEEN WATER MAINS AND GAS, ELECTRIC, AND OTHER PUBLIC UTILITIES.

SANITARY SEWER NOTES:

1. MATERIALS:
   - A. ALL PVC SEWER PIPE AND FITTINGS SHALL BE NON-PRESSURE POLYVINYL CHLORIDE (PVC) PIPE CONFORMING TO ASTM D 3034, SDR 26, WITH PUSH-ON RUBBER GASKET JOINTS.
   - B. ALL FITTINGS AND ACCESSORIES SHALL BE AS MANUFACTURED OR SUPPLIED BY THE PIPE MANUFACTURER OR APPROVED EQUAL.
   - C. ALL SANITARY CLEANOUTS WITHIN PAVEMENT SHALL HAVE A LID THAT IS H20 LOADING.
2. INSTALLATION:
   - A. PIPE AND FITTINGS:
     1) SEWER PIPE SHALL BE INSTALLED IN ACCORDANCE WITH ASTM D2321, AND THE UNI-BELL PLASTICS PIPE ASSOCIATION'S "RECOMMENDED PRACTICE FOR THE INSTALLATION OF PVC SEWER PIPE".
     2) BEDDING AND INITIAL BACKFILL (12 INCHES) OVER SEWER MAINS AND SERVICES SHALL BE SAND WITH NO ROCK LARGER THAN 1" IN DIAMETER. 3/4" WASHED ROCK WILL BE USED IN WATER OR WHERE UNSUITABLE BEDDING EXISTS. ALL OTHER FILL SHALL NOT HAVE ROCK LARGER THAN 6" IN DIAMETER.
     3) SEWER PIPES SHALL BE INSTALLED WITH A MINIMUM OF 1% SLOPE.
   - B. CLEANOUTS:
     1) CLEANOUTS SHALL BE SET PLUMB TO LINE AND GRADE ON FIRM CLEAN SUBGRADE PROVIDING UNIFORM BEARING UNDER THE BASE.
     2) ALL OPENINGS AND JOINTS SHALL BE SEALED WATER-TIGHT.
   - C. SERVICE:
     1) MINIMUM SLOPE OF ALL SERVICE LINES SHALL BE 1.00%.
     2) EACH SERVICE CONNECTION SHALL BE PLUGGED WATER-TIGHT WITH AN APPROVED PLUG.
     3) CONNECTION OF SERVICES TO BUILDING'S PLUMBING SHALL BE COORDINATED WITH THE ARCHITECTURAL DRAWINGS.
3. TESTING:
   - A. AFTER CONSTRUCTION OF THE SEWER SYSTEM, THE ENGINEER MAY REQUIRE A VISUAL INFILTRATION AND/OR EXFILTRATION TEST TO BE PERFORMED ON THE ENTIRE SYSTEM OR ANY PART THEREOF.
   - B. AN AIR TEST MAY BE SUBSTITUTED FOR THE WATER EXFILTRATION TEST, UPON APPROVAL OF THE ENGINEER.
   - C. SEWER PIPE LEAKAGE ALLOWABLE SHALL NOT EXCEED 150 GALLONS PER DAY PER INCH DIAMETER PER MILE IN A TWO HOUR TEST PERIOD FOR ANY SECTION TESTED. NO VISIBLE LEAKAGE SHALL BE ALLOWED.
   - D. CONTRACTOR IS RESPONSIBLE FOR CORRECTING ANY DEFICIENCIES PRIOR TO THE CERTIFICATION TO ANY AGENCY.
   - E. GENERAL CONTRACTOR SHALL EMPLOY AN INDEPENDENT INSPECTOR FOR 100% CONTINUOUS INSPECTION OF THE BEDDING AND BACKFILL OPERATION. COMPACTION TESTS SHALL BE TAKEN AT THE BOTTOM OF TRENCH AND AT EACH LIFT OF BACKFILL.
   - F. GENERAL CONTRACTOR SHALL EMPLOY A LICENSED SURVEYOR ASOBUILT TOP OF PIPE ELEVATIONS TAKEN WHEN BEDDING OPERATION IS 75% COMPLETE. THESE ELEVATIONS SHALL BE TAKEN AT POINTS OF CONNECTION, CHANGES IN DIRECTION AND AT MINIMUM 20' INTERVALS ALONG THE LENGTH OF THE PIPE. THESE ELEVATIONS SHALL BE RECORDED AS AS-BUILT DIMENSIONS ON SITE PLAN REVIEW BY PROJECT ENGINEER.
   - G. ALL SANITARY LINES ARE TO BE FLUSHED PRIOR TO CONTRACTOR TURNOVER OF THE FACILITY.

10 5 2.5 0 10
1"= 10'

BOHLER™ ENGINEERING
SITE CIVIL AND CONSULTING ENGINEERING
LAND SURVEYING
PROGRAM MANAGEMENT
LANDSCAPE ARCHITECTURE
ENVIRONMENTAL STUDIES
PERMITTING SERVICES
TRANSPORTATION SERVICES

THE INFORMATION, DESIGN AND CONTENT OF THIS PLAN ARE PROPRIETARY AND SHALL NOT BE COPIED OR USED FOR ANY PURPOSE WITHOUT PRIOR WRITTEN AUTHORIZATION FROM BOHLER ENGINEERING. ONLY THE ORIGINAL PLAN IS AUTHORIZED FOR CONSTRUCTION PURPOSES.

REVISIONS

REV	DATE	COMMENT	DRAWN BY / CHECKED BY
1	2019-08-23	CITY OF DELRAY BEACH COMMENTS	LJL / AS
2	2019-09-10	SPRAB COMMENTS	LJL / AS

THIS DRAWING IS INTENDED FOR MUNICIPAL AND/OR AGENCY REVIEW AND APPROVAL. IT IS NOT INTENDED AS A CONSTRUCTION DOCUMENT UNLESS INDICATED OTHERWISE.

811 Know what's below. Call before you dig.
ALWAYS CALL 811
It's fast. It's free. It's the law.

ISSUED FOR MUNICIPAL & AGENCY REVIEW & APPROVAL

PROJECT No.:	FLB180120
DRAWN BY:	LJL
CHECKED BY:	AS
DATE:	2019-10-25
CAD I.D.:	FLB180120-UTP-1

PROJECT:
PIERRE DELRAY PHASE 1 - SPRAB SITE PLAN PACKAGE (AKA SUNTRUST BUILDING)

FOR

CLIENT
ZYSCOVICH ARCHITECTS

PROPOSED DEVELOPMENT
302 E ATLANTIC AVE
PALM BEACH COUNTY
DELRAY BEACH, FL

BOHLER ENGINEERING
2255 GLADES ROAD, SUITE 305E
BOCA RATON, FLORIDA 33431
Phone: (561) 571-0280
Fax: (561) 571-0281
FLORIDA BUSINESS CERT. OF AUTH. No. 30780
LANDSCAPE ARCHITECT BUSINESS LIC. No LC26000551

SHEET TITLE:
UTILITY PLAN

SHEET NUMBER:
C-501

REVISION 2 - 2019-09-10

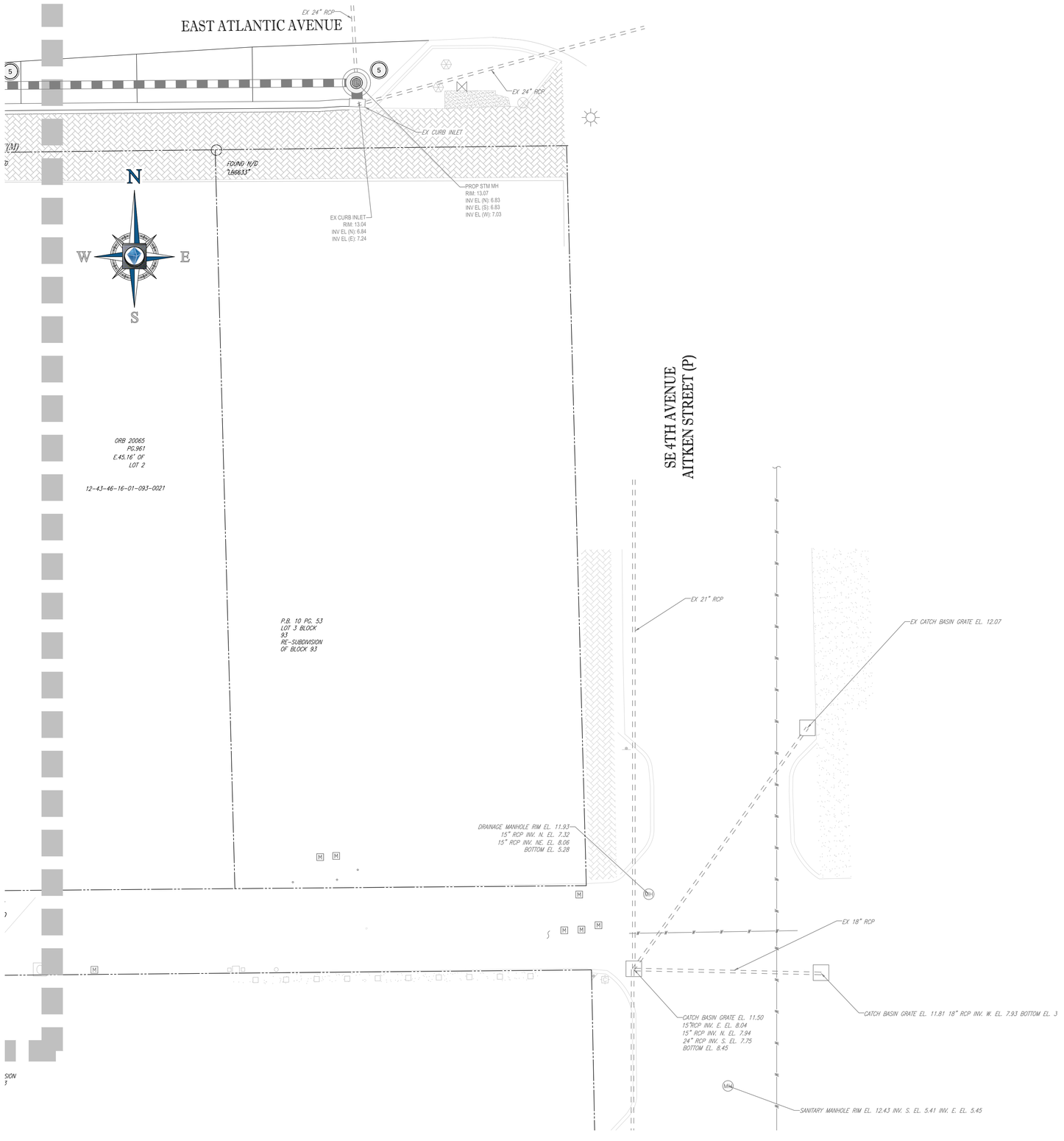

LEGEND:

- EX PROPERTY BOUNDARY LINES
- EX ADJACENT BOUNDARY LINES
- PROP PROPERTY BOUNDARY LINES
- EX STORM WATER LINE
- EX SANITARY SEWER LINE
- PROP UTILITY EASEMENT
- PROP SANITARY LINE
- PROP SANITARY LATERAL
- PROP WATER LINE
- PROP FIRE LINE
- PROP WATER SERVICE
- PROP ELECTRIC LINE
- PROP STORM SEWER
- PROP EXFILTRATION TRENCH
- PROP STORM STRUCTURES
- PROP SANITARY STRUCTURE

WATER DISTRIBUTION NOTES:

1. CONTRACTOR SHALL FOLLOW GUIDELINES AND PROCEDURES OUTLINED BY UTILITY PROVIDER, AND HAVE UTILITY PROVIDER'S MANUAL ON-SITE AT ALL TIMES. THIS POLICY MANUAL SHALL BE CONSIDERED PART OF THE CONSTRUCTION DOCUMENTS AS IT PERTAINS TO APPROVED MATERIALS, INSTALLATION METHODS, INSPECTION NOTIFICATION AND AS-BUILT/PROJECT CLOSEOUT REQUIREMENTS.
2. ALL HIGH DENSITY POLYETHYLENE PIPE AND FITTINGS SHALL MEET THE REQUIREMENTS OF AASHTO M - 294 LATEST REVISIONS. ALL PIPING TO BE NON-PERFORATED TUBING.
3. ALL PVC PIPE SHALL BE C900(SDR), AND ALL DIP PIPE SHALL BE C151 CLASS.
4. ALL WATER AND SEWER SYSTEM MATERIALS AND CONSTRUCTION SHALL BE IN ACCORDANCE WITH CITY OF DELRAY BEACH STANDARDS.
5. WATER AND SEWER MAIN HORIZONTAL AND VERTICAL SEPARATIONS SHALL COMPLY WITH PALM BEACH COUNTY CRITERIA/REQUIREMENTS, UNLESS OTHERWISE AGREED UPON BY THE CITY IN ADVANCE OF ANY APPLICABLE FIELD INSTALLATIONS.
6. ALL WATER MAINS SHALL BE INSTALLED WITH A MINIMUM PIPE COVER OF 36 INCHES FOR PVC AND 30 INCHES FOR DIP.
7. ALL DISINFECTION SHALL MEET DISINFECTION SPECS. (C651- 05) OR LATEST REVISION.
8. NO BENEFICIAL USE SHALL BE MADE OF THE PROPOSED WATER MAINS TO BE INSTALLED PER THIS PERMIT WITHOUT WRITTEN APPROVAL FROM THE FLORIDA DEPARTMENT OF HEALTH IN PALM BEACH COUNTY.
9. MIN. 12" VERTICAL SEPARATION REQUIRED BETWEEN WATER MAINS AND GAS, ELECTRIC, AND OTHER PUBLIC UTILITIES.

SANITARY SEWER NOTES:

1. MATERIALS:
   - A. ALL PVC SEWER PIPE AND FITTINGS SHALL BE NON-PRESSURE POLYVINYL CHLORIDE (PVC) PIPE CONFORMING TO ASTM D 3034, SDR 26, WITH PUSH-ON RUBBER GASKET JOINTS.
   - B. ALL FITTINGS AND ACCESSORIES SHALL BE AS MANUFACTURED OR SUPPLIED BY THE PIPE MANUFACTURER OR APPROVED EQUAL.
   - C. ALL SANITARY CLEANOUTS WITHIN PAVEMENT SHALL HAVE A LID THAT IS H20 LOADING.
2. INSTALLATION:
   - A. PIPE AND FITTINGS:
     1) SEWER PIPE SHALL BE INSTALLED IN ACCORDANCE WITH ASTM D2321, AND THE UNI-BELL PLASTICS PIPE ASSOCIATIONS "RECOMMENDED PRACTICE FOR THE INSTALLATION OF PVC SEWER PIPE".
     2) BEDDING AND INITIAL BACKFILL (12 INCHES) OVER SEWER MAINS AND SERVICES SHALL BE SAND WITH NO ROCK LARGER THAN 1" IN DIAMETER. 3/4" WASHED ROCK WILL BE USED IN WATER OR WHERE UNSUITABLE BEDDING EXISTS. ALL OTHER FILL SHALL NOT HAVE ROCK LARGER THAN 6" IN DIAMETER.
     3) SEWER PIPES SHALL BE INSTALLED WITH A MINIMUM OF 1% SLOPE.
   - B. CLEANOUTS:
     1) CLEANOUTS SHALL BE SET PLUMB TO LINE AND GRADE ON FIRM CLEAN SUBGRADE PROVIDING UNIFORM BEARING UNDER THE BASE.
     2) ALL OPENINGS AND JOINTS SHALL BE SEALED WATER-TIGHT.
   - C. SERVICE:
     1) MINIMUM SLOPE OF ALL SERVICE LINES SHALL BE 1.00%.
     2) EACH SERVICE CONNECTION SHALL BE PLUGGED WATER-TIGHT WITH AN APPROVED PLUG.
     3) CONNECTION OF SERVICES TO BUILDING'S PLUMBING SHALL BE COORDINATED WITH THE ARCHITECTURAL DRAWINGS.
3. TESTING:
   - A. AFTER CONSTRUCTION OF THE SEWER SYSTEM, THE ENGINEER MAY REQUIRE A VISUAL INFILTRATION AND/OR EXFILTRATION TEST TO BE PERFORMED ON THE ENTIRE SYSTEM OR ANY PART THEREOF.
   - B. AN AIR TEST MAY BE SUBSTITUTED FOR THE WATER EXFILTRATION TEST, UPON APPROVAL OF THE ENGINEER.
   - C. SEWER PIPE LEAKAGE ALLOWABLE SHALL NOT EXCEED 150 GALLONS PER DAY PER INCH DIAMETER PER MILE IN A TWO HOUR TEST PERIOD FOR ANY SECTION TESTED. NO VISIBLE LEAKAGE SHALL BE ALLOWED.
   - D. CONTRACTOR IS RESPONSIBLE FOR CORRECTING ANY DEFICIENCIES PRIOR TO THE CERTIFICATION TO ANY AGENCY.
   - E. GENERAL CONTRACTOR SHALL EMPLOY AN INDEPENDENT INSPECTOR FOR 100% CONTINUOUS INSPECTION OF THE BEDDING AND BACKFILL OPERATION. COMPACTION TESTS SHALL BE TAKEN AT THE BOTTOM OF TRENCH AND AT EACH LIFT OF BACKFILL.
   - F. GENERAL CONTRACTOR SHALL EMPLOY A LICENSED SURVEYOR AS0BUILT TOP OF PIPE ELEVATIONS TAKEN WHEN BEDDING OPERATION IS 75% COMPLETE. THESE ELEVATIONS SHALL BE TAKEN AT POINTS OF CONNECTION, CHANGES IN DIRECTION AND AT MINIMUM 20' INTERVALS ALONG THE LENGTH OF THE PIPE. THESE ELEVATIONS SHALL BE RECORDED AS AS-BUILT DIMENSIONS ON SITE PLAN REVIEW BY PROJECT ENGINEER.
   - G. ALL SANITARY LINES ARE TO BE FLUSHED PRIOR TO CONTRACTOR TURNOVER OF THE FACILITY.

BOHLER ENGINEERING
SITE CIVIL AND CONSULTING ENGINEERING
LAND SURVEYING
PROGRAM MANAGEMENT
LANDSCAPE ARCHITECTURE
SUSTAINABLE DESIGN
PERMITTING SERVICES
TRANSPORTATION SERVICES

THE INFORMATION, DESIGN AND CONTENT OF THIS PLAN ARE PROPRIETARY AND SHALL NOT BE COPIED OR USED FOR ANY PURPOSE WITHOUT PRIOR WRITTEN AUTHORIZATION FROM BOHLER ENGINEERING. ONLY THE PLANS AND SPECIFICATIONS SIGNED AND SEALED BY A LICENSED PROFESSIONAL ENGINEER SHALL BE UTILIZED FOR CONSTRUCTION PURPOSES.

REVISIONS

REV	DATE	COMMENT	DRAWN BY / CHECKED BY
1	2019-08-23	CITY OF DELRAY BEACH COMMENTS	LJL / AS
2	2019-09-10	SPRAB COMMENTS	LJL / AS

THIS DRAWING IS INTENDED FOR MUNICIPAL AND/OR AGENCY REVIEW AND APPROVAL. IT IS NOT INTENDED AS A CONSTRUCTION DOCUMENT UNLESS INDICATED OTHERWISE.

811 Know what's below. Call before you dig.

ALWAYS CALL 811

It's fast. It's free. It's the law.

ISSUED FOR MUNICIPAL & AGENCY REVIEW & APPROVAL

PROJECT No.:	FLB180120
DRAWN BY:	LJL
CHECKED BY:	AS
DATE:	2019-10-25
CAD I.D.:	FLB180120-UTP-1

PROJECT:

PIERRE DELRAY PHASE 1 - SPRAB SITE PLAN PACKAGE (AKA SUNTRUST BUILDING)

FOR

CLIENT

ZYSCOVICH ARCHITECTS

PROPOSED DEVELOPMENT

302 E ATLANTIC AVE
PALM BEACH COUNTY
DELRAY BEACH, FL

BOHLER ENGINEERING
2255 GLADES ROAD, SUITE 305E
BOCA RATON, FLORIDA 33431
Phone: (561) 571-0280
Fax: (561) 571-0281
FLORIDA BUSINESS CERT. OF AUTH. No. 30780
LANDSCAPE ARCHITECT BUSINESS LIC. No LC26000551

SHEET TITLE:

UTILITY PLAN

SHEET NUMBER:

C-502

REVISION 2 - 2019-09-10

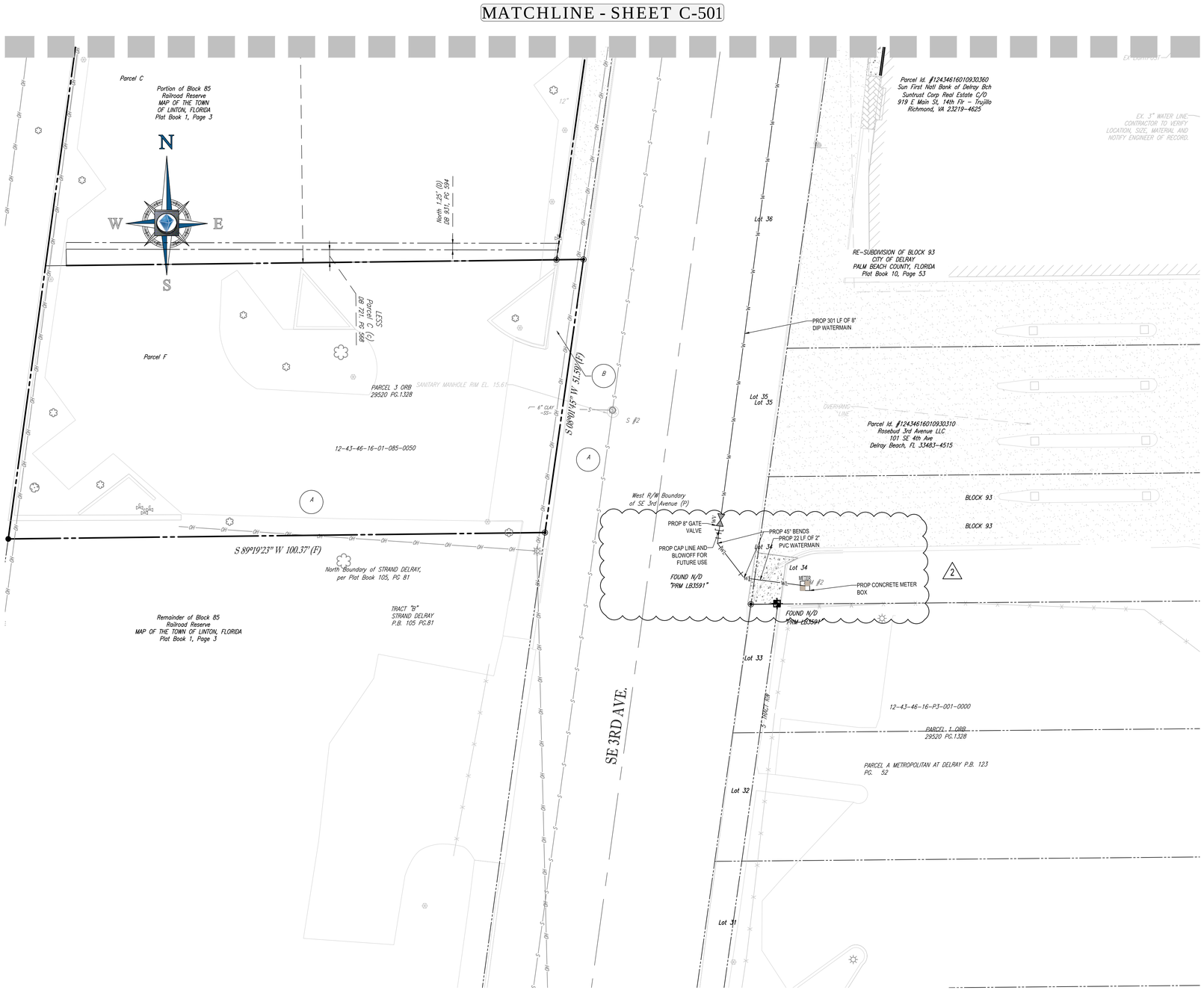

LEGEND:

- EX PROPERTY BOUNDARY LINES
- EX ADJACENT BOUNDARY LINES
- PROP PROPERTY BOUNDARY LINES
- EX STORM WATER LINE
- EX SANITARY SEWER LINE
- PROP UTILITY EASEMENT
- PROP SANITARY LINE
- PROP SANITARY LATERAL
- PROP WATER LINE
- PROP FIRE LINE
- PROP WATER SERVICE
- PROP ELECTRIC LINE
- PROP STORM SEWER
- PROP EXFILTRATION TRENCH
- PROP STORM STRUCTURES
- PROP SANITARY STRUCTURE

WATER DISTRIBUTION NOTES:

1. CONTRACTOR SHALL FOLLOW GUIDELINES AND PROCEDURES OUTLINED BY UTILITY PROVIDER, AND HAVE UTILITY PROVIDER'S MANUAL ON-SITE AT ALL TIMES. THIS POLICY MANUAL SHALL BE CONSIDERED PART OF THE CONSTRUCTION DOCUMENTS AS IT PERTAINS TO APPROVED MATERIALS, INSTALLATION METHODS, INSPECTION NOTIFICATION AND AS-BUILT/PROJECT CLOSEOUT REQUIREMENTS.
2. ALL HIGH DENSITY POLYETHYLENE PIPE AND FITTINGS SHALL MEET THE REQUIREMENTS OF AASHTO M - 294 LATEST REVISIONS. ALL PIPING TO BE NON-PERFORATED TUBING.
3. ALL PVC PIPE SHALL BE C900(SDR), AND ALL DIP PIPE SHALL BE C151 CLASS.
4. ALL WATER AND SEWER SYSTEM MATERIALS AND CONSTRUCTION SHALL BE IN ACCORDANCE WITH CITY OF DELRAY BEACH STANDARDS.
5. WATER AND SEWER MAIN HORIZONTAL AND VERTICAL SEPARATIONS SHALL COMPLY WITH PALM BEACH COUNTY CRITERIA/REQUIREMENTS, UNLESS OTHERWISE AGREED UPON BY THE CITY IN ADVANCE OF ANY APPLICABLE FIELD INSTALLATIONS.
6. ALL WATER MAINS SHALL BE INSTALLED WITH A MINIMUM PIPE COVER OF 36 INCHES FOR PVC AND 30 INCHES FOR DIP.
7. ALL DISINFECTION SHALL MEET DISINFECTION SPECS. (C651- 05) OR LATEST REVISION.
8. NO BENEFICIAL USE SHALL BE MADE OF THE PROPOSED WATER MAINS TO BE INSTALLED PER THIS PERMIT WITHOUT WRITTEN APPROVAL FROM THE FLORIDA DEPARTMENT OF HEALTH IN PALM BEACH COUNTY.
9. MIN. 12" VERTICAL SEPARATION REQUIRED BETWEEN WATER MAINS AND GAS, ELECTRIC, AND OTHER PUBLIC UTILITIES.

SANITARY SEWER NOTES:

1. MATERIALS:
   - A. ALL PVC SEWER PIPE AND FITTINGS SHALL BE NON-PRESSURE POLYVINYL CHLORIDE (PVC) PIPE CONFORMING TO ASTM D 3034, SDR 26, WITH PUSH-ON RUBBER GASKET JOINTS.
   - B. ALL FITTINGS AND ACCESSORIES SHALL BE AS MANUFACTURED OR SUPPLIED BY THE PIPE MANUFACTURER OR APPROVED EQUAL.
   - C. ALL SANITARY CLEANOUTS WITHIN PAVEMENT SHALL HAVE A LID THAT IS H20 LOADING.
2. INSTALLATION:
   - A. PIPE AND FITTINGS:
     1) SEWER PIPE SHALL BE INSTALLED IN ACCORDANCE WITH ASTM D2321, AND THE UNI-BELL PLASTICS PIPE ASSOCIATION'S "RECOMMENDED PRACTICE FOR THE INSTALLATION OF PVC SEWER PIPE".
     2) BEDDING AND INITIAL BACKFILL (12 INCHES) OVER SEWER MAINS AND SERVICES SHALL BE SAND WITH NO ROCK LARGER THAN 1" IN DIAMETER. 3/4" WASHED ROCK WILL BE USED IN WATER OR WHERE UNSUITABLE BEDDING EXISTS. ALL OTHER FILL SHALL NOT HAVE ROCK LARGER THAN 6" IN DIAMETER.
     3) SEWER PIPES SHALL BE INSTALLED WITH A MINIMUM OF 1% SLOPE.
   - B. CLEANOUTS:
     1) CLEANOUTS SHALL BE SET PLUMB TO LINE AND GRADE ON FIRM CLEAN SUBGRADE PROVIDING UNIFORM BEARING UNDER THE BASE.
     2) ALL OPENINGS AND JOINTS SHALL BE SEALED WATER-TIGHT.
   - C. SERVICE:
     1) MINIMUM SLOPE OF ALL SERVICE LINES SHALL BE 1.00%.
     2) EACH SERVICE CONNECTION SHALL BE PLUGGED WATER-TIGHT WITH AN APPROVED PLUG.
     3) CONNECTION OF SERVICES TO BUILDING'S PLUMBING SHALL BE COORDINATED WITH THE ARCHITECTURAL DRAWINGS.
3. TESTING:
   - A. AFTER CONSTRUCTION OF THE SEWER SYSTEM, THE ENGINEER MAY REQUIRE A VISUAL INFILTRATION AND/OR EXFILTRATION TEST TO BE PERFORMED ON THE ENTIRE SYSTEM OR ANY PART THEREOF.
   - B. AN AIR TEST MAY BE SUBSTITUTED FOR THE WATER EXFILTRATION TEST, UPON APPROVAL OF THE ENGINEER.
   - C. SEWER PIPE LEAKAGE ALLOWABLE SHALL NOT EXCEED 150 GALLONS PER DAY PER INCH DIAMETER PER MILE IN A TWO HOUR TEST PERIOD FOR ANY SECTION TESTED. NO VISIBLE LEAKAGE SHALL BE ALLOWED.
   - D. CONTRACTOR IS RESPONSIBLE FOR CORRECTING ANY DEFICIENCIES PRIOR TO THE CERTIFICATION TO ANY AGENCY.
   - E. GENERAL CONTRACTOR SHALL EMPLOY AN INDEPENDENT INSPECTOR FOR 100% CONTINUOUS INSPECTION OF THE BEDDING AND BACKFILL OPERATION. COMPACTION TESTS SHALL BE TAKEN AT THE BOTTOM OF TRENCH AND AT EACH LIFT OF BACKFILL.
   - F. GENERAL CONTRACTOR SHALL EMPLOY A LICENSED SURVEYOR AS0BUILT TOP OF PIPE ELEVATIONS TAKEN WHEN BEDDING OPERATION IS 75% COMPLETE. THESE ELEVATIONS SHALL BE TAKEN AT POINTS OF CONNECTION, CHANGES IN DIRECTION AND AT MINIMUM 20' INTERVALS ALONG THE LENGTH OF THE PIPE. THESE ELEVATIONS SHALL BE RECORDED AS AS-BUILT DIMENSIONS ON SITE PLAN REVIEW BY PROJECT ENGINEER.
   - G. ALL SANITARY LINES ARE TO BE FLUSHED PRIOR TO CONTRACTOR TURNOVER OF THE FACILITY.

10 5 2.5 0 10
1"=10'

BOHLER™ ENGINEERING
SITE CIVIL AND CONSULTING ENGINEERING
LAND SURVEYING
PROGRAM MANAGEMENT
LANDSCAPE ARCHITECTURE
SUSTAINABLE DESIGN
PERMITTING SERVICES
TRANSPORTATION SERVICES

THE INFORMATION, DESIGN AND CONTENT OF THIS PLAN ARE PROPRIETARY AND SHALL NOT BE COPIED OR USED FOR ANY PURPOSE WITHOUT PRIOR WRITTEN AUTHORIZATION FROM BOHLER ENGINEERING. ONLY THOSE PLANS OR PORTIONS THEREOF MARKED FOR CONSTRUCTION SHALL BE UTILIZED FOR CONSTRUCTION PURPOSES.
© BOHLER ENGINEERING

REVISIONS

REV	DATE	COMMENT	DRAWN BY / CHECKED BY
1	2019-08-23	CITY OF DELRAY BEACH COMMENTS	LJL / AS
2	2019-09-10	SPRAB COMMENTS	LJL / AS

THIS DRAWING IS INTENDED FOR MUNICIPAL AND/OR AGENCY REVIEW AND APPROVAL. IT IS NOT INTENDED AS A CONSTRUCTION DOCUMENT UNLESS INDICATED OTHERWISE.

811 Know what's below. Call before you dig.
ALWAYS CALL 811
It's fast. It's free. It's the law.

ISSUED FOR MUNICIPAL & AGENCY REVIEW & APPROVAL

PROJECT No.:	FLB180120
DRAWN BY:	LJL
CHECKED BY:	AS
DATE:	2019-10-25
CAD I.D.:	FLB180120-UTP-1

PROJECT:
PIERRE DELRAY PHASE 1 - SPRAB SITE PLAN PACKAGE (AKA SUNTRUST BUILDING)
FOR
CLIENT
ZYSCOVICH ARCHITECTS
PROPOSED DEVELOPMENT
302 E ATLANTIC AVE
PALM BEACH COUNTY
DELRAY BEACH, FL

BOHLER ENGINEERING
2255 GLADES ROAD, SUITE 305E
BOCA RATON, FLORIDA 33431
Phone: (561) 571-0280
Fax: (561) 571-0281
FLORIDA BUSINESS CERT. OF AUTH. No. 30780
LANDSCAPE ARCHITECT BUSINESS LIC. No LC26000551

SHEET TITLE:
UTILITY PLAN

SHEET NUMBER:
C-503

REVISION 2 - 2019-09-10

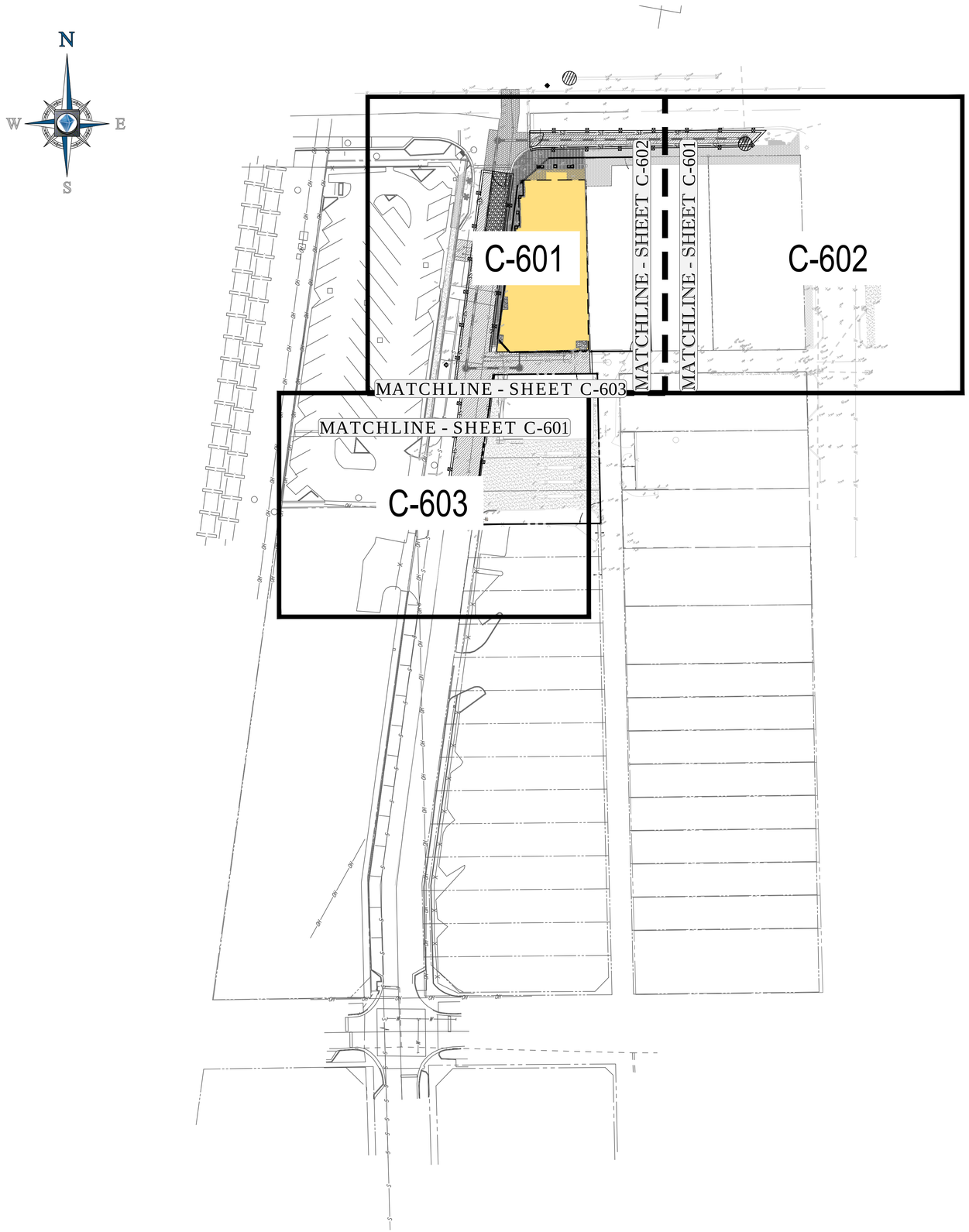

40 20 10 0 40
1"= 40'

BOHLER ENGINEERING

SITE CIVIL AND CONSULTING ENGINEERING
LAND SURVEYING
PROGRAM MANAGEMENT
LANDSCAPE ARCHITECTURE
SUSTAINABLE DESIGN
PERMITTING SERVICES
TRANSPORTATION SERVICES

THE INFORMATION, DESIGN AND CONTENT OF THIS PLAN ARE PROPRIETARY AND SHALL NOT BE COPIED OR USED FOR ANY PURPOSE WITHOUT PRIOR WRITTEN AUTHORIZATION FROM BOHLER ENGINEERING, INC. ELECTRONIC FILES MAY BE UTILIZED FOR CONSTRUCTION PURPOSES BY PERSONS AUTHORIZED BY BOHLER ENGINEERING.

REVISIONS

REV	DATE	COMMENT	DRAWN BY / CHECKED BY
1	2019-08-23	CITY OF DELRAY BEACH COMMENTS	LJL / AS
2	2019-09-10	SPRAB COMMENTS	LJL / AS

THIS DRAWING IS INTENDED FOR MUNICIPAL AND/OR AGENCY REVIEW AND APPROVAL. IT IS NOT INTENDED AS A CONSTRUCTION DOCUMENT UNLESS INDICATED OTHERWISE.

811 Know what's below. Call before you dig.

ALWAYS CALL 811

It's fast. It's free. It's the law.

ISSUED FOR MUNICIPAL & AGENCY REVIEW & APPROVAL

PROJECT No.:	FLB180120
DRAWN BY:	LJL
CHECKED BY:	AS
DATE:	2019-10-25
CAD I.D.:	FLB180120-OAP-1

PROJECT:

PIERRE DELRAY PHASE 1 - SPRAB SITE PLAN PACKAGE (AKA SUNTRUST BUILDING)

FOR

CLIENT

ZYSCOVICH ARCHITECTS

PROPOSED DEVELOPMENT

302 E ATLANTIC AVE
PALM BEACH COUNTY
DELRAY BEACH, FL

BOHLER ENGINEERING
2255 GLADES ROAD, SUITE 305E
BOCA RATON, FLORIDA 33431
Phone: (561) 571-0280
Fax: (561) 571-0281
FLORIDA BUSINESS CERT. OF AUTH. No. 30780
LANDSCAPE ARCHITECT BUSINESS LIC. No.LC26000551

SHEET TITLE:

EROSION AND SEDIMENTATION CONTROL PLAN KEY SHEET

SHEET NUMBER:

C-600

REVISION 2 - 2019-09-10

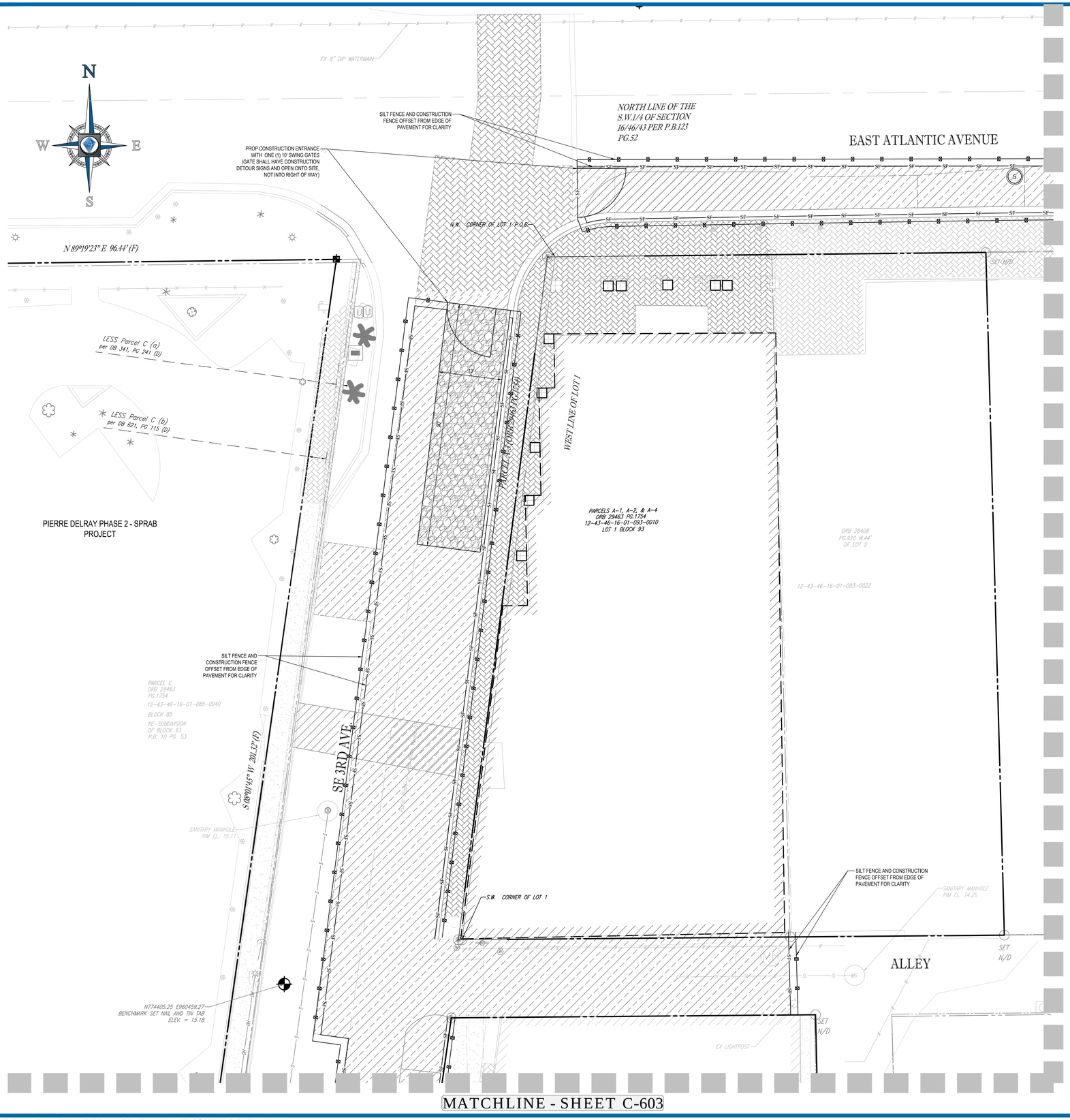

LEGEND:

- PROPERTY LINE
- EXIST. DRAINAGE STRUCTURES
- EXIST. STORM SEWER
- PROP SILT FENCE
- PROP CONSTRUCTION FENCE
- PROP SOIL TRACKING PREVENTION MAT
- PROP INLET PROTECTION

POLLUTION PREVENTION NOTES:

1. EROSION AND SEDIMENT CONTROL BMP'S IN ADDITION TO THOSE PRESENTED ON THESE PLANS SHALL BE IMPLEMENTED AS NECESSARY TO PREVENT TURBID DISCHARGES FROM FLOWING ONTO ADJACENT PROPERTIES OR ROADWAYS, OFF SITE STORMWATER CONVEYANCES OR RECEIVING WATERS, OR ON SITE WETLANDS AND SURFACE WATERS. BMP'S SHALL BE DESIGNED, INSTALLED, AND MAINTAINED BY THE SITE OPERATOR TO ENSURE THAT OFF SITE SURFACE WATER QUALITY REMAINS CONSISTENT WITH STATE AND LOCAL REGULATIONS. [THE OPERATOR IS THE ENTITY THAT OWNS OR OPERATES THE CONSTRUCTION ACTIVITY AND HAS AUTHORITY TO CONTROL THOSE ACTIVITIES AT THE PROJECT NECESSARY TO ENSURE COMPLIANCE.]

2. OFF SITE SURFACE WATER DISCHARGES, OR DISCHARGES TO ONSITE WETLANDS OR SURFACE WATERS WITH TURBIDITY IN EXCESS OF 29 NEPHELOMETRIC TURBIDITY UNITS (NTU'S) ABOVE BACKGROUND LEVEL SHALL BE IMMEDIATELY CORRECTED. SUCH INCIDENTS SHALL BE REPORTED TO WATER RESOURCES WITHIN 24 HOURS OF THE OCCURRENCE. THE REPORT SHALL INCLUDE THE CAUSE OF THE DISCHARGE AND CORRECTIVE ACTIONS TAKEN.

3. THE OPERATOR SHALL ENSURE THAT ADJACENT PROPERTIES ARE NOT IMPACTED BY WIND EROSION, OR EMISSIONS OF UNCONFINED PARTICULATE MATTER IN ACCORDANCE WITH RULE 62-296.320(4)(C)1, F.A.C., BY TAKING APPROPRIATE MEASURES TO STABILIZE AFFECTED AREAS.

4. FUEL AND OTHER PETROLEUM PRODUCT SPILLS THAT ENTER STORMWATER DRAINS OR WATERBODIES, OR FUEL AND OTHER PETROLEUM PRODUCT SPILLS THAT ARE IN EXCESS OF 25 GALLONS SHALL BE CONTAINED, CLEANED UP, AND IMMEDIATELY REPORTED TO WATER RESOURCES. SMALLER GROUND SURFACE SPILLS SHALL BE CLEANED UP AS SOON AS PRACTICAL.

5. IF CONTAMINATED SOIL AND/OR GROUNDWATER IS DISCOVERED DURING DEVELOPMENT OF THE SITE, ALL ACTIVITY IN THE VICINITY OF THE CONTAMINATION SHALL IMMEDIATELY CEASE, AND WATER RESOURCES SHALL BE CONTACTED.

6. PRIOR TO DEMOLITION OF EXISTING ON SITE STRUCTURES AN ASBESTOS SURVEY AND/OR ASBESTOS NOTIFICATION MAY BE REQUIRED.

7. NATIONAL POLLUTANT DISCHARGE ELIMINATION SYSTEM:
   - A. NPDES CONSTRUCTION GENERIC PERMIT COVERAGE SHALL BE OBTAINED AT LEAST 48 HOURS IN ADVANCE OF CONSTRUCTION COMMENCEMENT IN ACCORDANCE WITH RULE 62-621.300(4)(a), F.A.C.
   - B. A COPY OF THE CERTIFIED NPDES NOI, OR A COPY OF THE FDEP COVERAGE CONFIRMATION LETTER SHALL BE POSTED AT THE SITE IN ACCORDANCE WITH RULE 62-621.300(4)(A) PART III.C.2, F.A.C.
   - C. A COPY OF THE CERTIFIED NPDES NOI, OR A COPY OF THE FDEP COVERAGE CONFIRMATION LETTER SHALL BE PROVIDED TO WATER RESOURCES IN ACCORDANCE WITH RULE 62-621.300(4)(a)PART III.D.1, F.A.C.
   - D. THE SWPPP SHALL BE CERTIFIED IN ACCORDANCE WITH RULE 62-621.300(4)(a)PART V.D.6, F.A.C.
   - E. A COPY OF THE SWPPP, AND COPIES OF THE INSPECTION AND MAINTENANCE RECORDS SHALL BE MAINTAINED AT THE PROJECT SITE, AND SHALL BE READILY AVAILABLE TO COUNTY OR STATE INSPECTORS.

8. THE DISCHARGE OF GROUNDWATER PRODUCED THROUGH DEWATERING, TO SURFACE WATERS, OR ANY PORTION OF THE MS4 WILL REQUIRE SEPARATE PERMITTING FROM THE FLORIDA DEPARTMENT OF ENVIRONMENTAL PROTECTION (DEP). PERMIT(S) SHALL BE OBTAINED PRIOR TO THE COMMENCEMENT OF DEWATERING.

MAINTENANCE NOTES:

N.P.D.E.S. PERMIT COMPLIANCE REQUIRES INSPECTIONS EVERY 7 CALENDAR DAYS BY A NPDES QUALIFIED INSPECTOR AND PERIODIC INSPECTIONS WITHIN 24 HOURS OF ANY RAINFALL EVENT OF 0.5 INCHES OR GREATER. THESE INSPECTIONS MAY RESULT IN RECOMMENDATIONS FOR ROUTINE MAINTENANCE OF THE SOIL EROSION CONTROL DEVICES, AS WELL AS FURTHER MAINTENANCE AS OUTLINED BELOW.

1. THROUGHOUT THE CONSTRUCTION PERIOD, ALL MUD/SILT TRACKED ONTO EXISTING FDOT ROADS FROM THE SITE DUE TO CONSTRUCTION SHALL BE IMMEDIATELY REMOVED BY THE CONTRACTOR.

2. CATCH BASIN INLET AND CONCRETE FLUME FILTERS SHALL BE MAINTAINED CLEAN AT ALL TIMES THROUGHOUT THE CONSTRUCTION PERIOD. WEEKLY INSPECTIONS WILL BE PERFORMED EVERY 7 CALENDAR DAYS. IF A FILTER HAS HOLES OR IS INUNDATED WITH SEDIMENT, THE FILTER WILL REQUIRE REPLACEMENT.

3. CONSTRUCTION ACCESS AND TRACKING MAT MUST BE MAINTAINED AS NECESSARY. REPLENISH CRUSHED AGGREGATE IF PRESENT LAYER IS FILLED WITH SEDIMENT, POOLING WATER OR HAS RUTS. A NEW LAYER MAY BE ADDED IF OLD LAYERS BECOME COMPACTED.

4. SILT FENCE IS TO BE INSPECTED DAILY BY CONTRACTOR AND EVERY 7 CALENDAR DAYS BY NPDES QUALIFIED INSPECTOR. IF REPAIRS OR REPLACEMENT IS NECESSARY, IT SHALL BE PERFORMED IMMEDIATELY. THE SILT FENCE SHOULD BE TRENCHED IN, BACK-FILLED, AND STAPLED OR STAKED ACCORDING TO THE MANUFACTURER'S SPECIFICATIONS. MAINTENANCE INCLUDES THE REMOVING OF BUILT-UP SEDIMENT. WHEN THE SEDIMENT ACCUMULATES TO 1/3 OF THE HEIGHT OF THE FENCE, CONTRACTOR MAY HAVE TO REMOVE, REPLACE, RETRENCH, OR RE-BACKFILL THE FENCE IF-IT FAILS. IT WOULD ALSO BE NECESSARY TO REINSTALL IF ANY PORTION OF THE FENCING WAS DAMAGED BY CONSTRUCTION MACHINERY.

5. SEEDING OR RESEEDING MAY BE REQUIRED IMMEDIATELY TO AREAS WHICH HAVE BEEN DAMAGED BY RUNOFF.

6. REMOVE ANY VISIBLE SEDIMENT FROM THE POND BOTTOM TO KEEP THE BASIN DESIGNED INFILTRATION PERFORMANCE

7. THE CONTRACTOR SHALL CONTINUOUSLY ENSURE THAT THE PERIMETER OF THE SITE, INCLUDING CONSTRUCTION ENTRANCES, IS SECURED FROM ALLOWING DEBRIS TO LEAVE THE SITE DUE TO CONSTRUCTION ACTIVITY OR RAINFALL EVENTS. A WEEKLY LOG SHALL BE UPDATED AND KEPT ON-SITE IN ACCORDANCE WITH THE NPDES PERMIT. BY BIDDING DOCUMENTS CONTRACTOR ACKNOWLEDGES HE/SHE IS AWARE OF NPDES GUIDELINES AND POLICIES AS WELL AS BEST MANAGEMENT PRACTICES AND ASSUMES SOLE RESPONSIBILITY FOR FINES IMPOSED BY GOVERNMENTAL AGENCIES DUE TO VIOLATIONS.

10 5 2.5 0 10
1"= 10'

BOHLER™ ENGINEERING
SITE CIVIL AND CONSULTING ENGINEERING
LAND SURVEYING
PROGRAM MANAGEMENT
LANDSCAPE ARCHITECTURE
SUSTAINABLE DESIGN
PERMITTING SERVICES
TRANSPORTATION SERVICES

THE INFORMATION, DESIGN AND CONTENT OF THIS PLAN ARE PROPRIETARY AND SHALL NOT BE COPIED OR USED FOR ANY PURPOSE WITHOUT PRIOR WRITTEN AUTHORIZATION FROM BOHLER ENGINEERING. ONLY THOSE PLANS OR PORTIONS THEREOF MARKED FOR CONSTRUCTION SHALL BE UTILIZED FOR CONSTRUCTION PURPOSES.

REVISIONS

REV	DATE	COMMENT	DRAWN BY / CHECKED BY
1	2019-08-23	CITY OF DELRAY BEACH COMMENTS	LJL / AS
2	2019-09-10	SPRAB COMMENTS	LJL / AS

THIS DRAWING IS INTENDED FOR MUNICIPAL AND/OR AGENCY REVIEW AND APPROVAL. IT IS NOT INTENDED AS A CONSTRUCTION DOCUMENT UNLESS INDICATED OTHERWISE.

811 Know what's below. Call before you dig.
ALWAYS CALL 811
It's fast. It's free. It's the law.

ISSUED FOR MUNICIPAL & AGENCY REVIEW & APPROVAL

PROJECT No.:	FLB180120
DRAWN BY:	LJL
CHECKED BY:	AS
DATE:	2019-10-25
CAD I.D.:	FLB180120-OAP-1

PROJECT:

PIERRE DELRAY PHASE 1 - SPRAB SITE PLAN PACKAGE (AKA SUNTRUST BUILDING)

FOR

CLIENT

ZYSCOVICH ARCHITECTS

PROPOSED DEVELOPMENT

302 E ATLANTIC AVE
PALM BEACH COUNTY
DELRAY BEACH, FL

BOHLER ENGINEERING
2255 GLADES ROAD, SUITE 305E
BOCA RATON, FLORIDA 33431
Phone: (561) 571-0280
Fax: (561) 571-0281
FLORIDA BUSINESS CERT. OF AUTH. No. 30780
LANDSCAPE ARCHITECT BUSINESS LIC. No LC26000551

SHEET TITLE:

EROSION AND SEDIMENTATION CONTROL PLAN PHASE I

SHEET NUMBER:

C-601

REVISION 2 - 2019-09-10

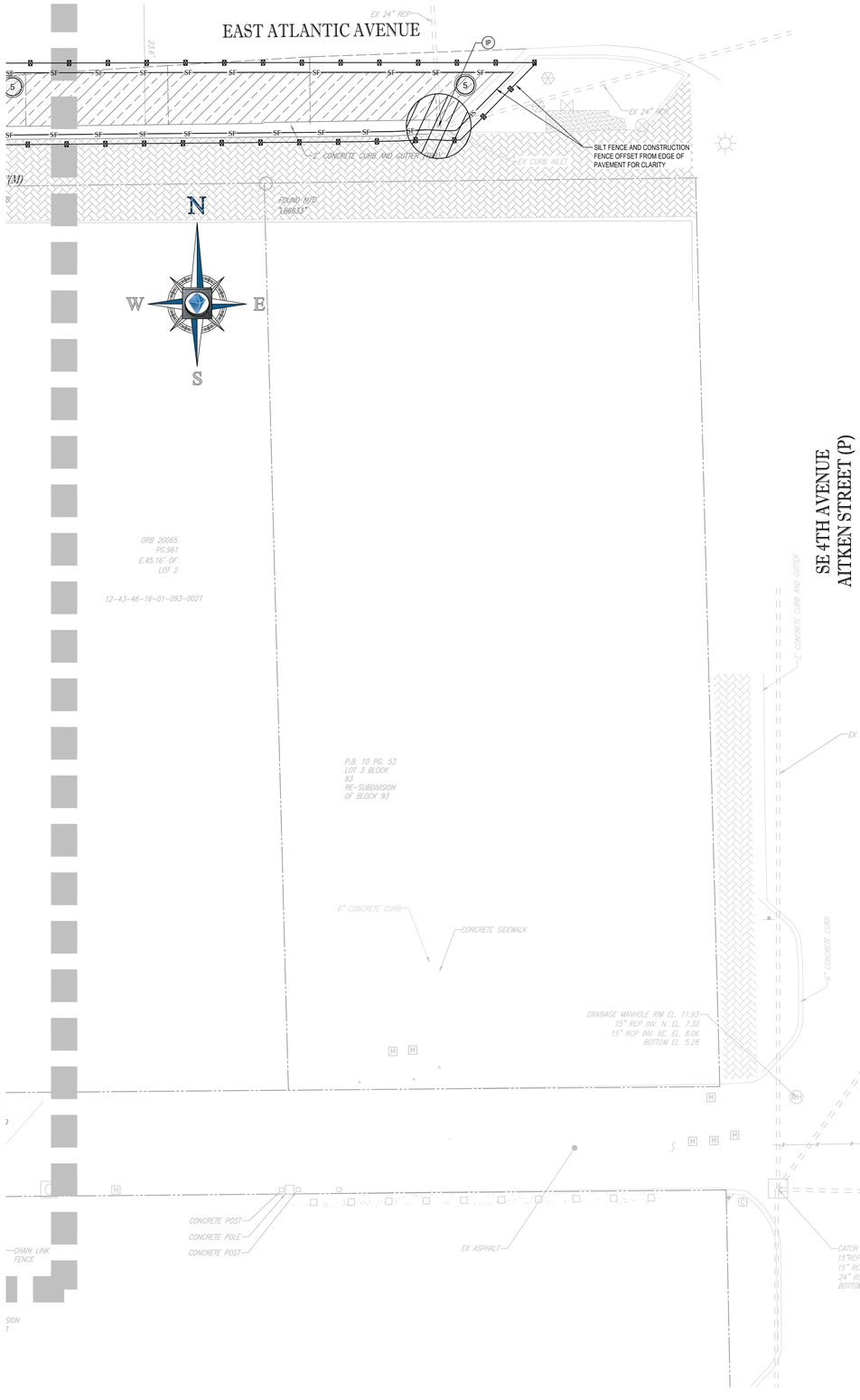

MATCHLINE - SHEET C-601

LEGEND:

- PROPERTY LINE
- EXIST. DRAINAGE STRUCTURES
- EXIST. STORM SEWER
- SF — SF — PROP SILT FENCE
- PROP CONSTRUCTION FENCE
- PROP SOIL TRACKING PREVENTION MAT
- PROP INLET PROTECTION

POLLUTION PREVENTION NOTES:

1. EROSION AND SEDIMENT CONTROL BMP'S IN ADDITION TO THOSE PRESENTED ON THESE PLANS SHALL BE IMPLEMENTED AS NECESSARY TO PREVENT TURBID DISCHARGES FROM FLOWING ONTO ADJACENT PROPERTIES OR ROADWAYS, OFF SITE STORMWATER CONVEYANCES OR RECEIVING WATERS, OR ON SITE WETLANDS AND SURFACE WATERS. BMP'S SHALL BE DESIGNED, INSTALLED, AND MAINTAINED BY THE SITE OPERATOR TO ENSURE THAT OFF SITE SURFACE WATER QUALITY REMAINS CONSISTENT WITH STATE AND LOCAL REGULATIONS. [THE OPERATOR IS THE ENTITY THAT OWNS OR OPERATES THE CONSTRUCTION ACTIVITY AND HAS AUTHORITY TO CONTROL THOSE ACTIVITIES AT THE PROJECT NECESSARY TO ENSURE COMPLIANCE.]

2. OFF SITE SURFACE WATER DISCHARGES, OR DISCHARGES TO ONSITE WETLANDS OR SURFACE WATERS WITH TURBIDITY IN EXCESS OF 29 NEPHELOMETRIC TURBIDITY UNITS (NTU'S) ABOVE BACKGROUND LEVEL SHALL BE IMMEDIATELY CORRECTED. SUCH INCIDENTS SHALL BE REPORTED TO WATER RESOURCES WITHIN 24 HOURS OF THE OCCURRENCE. THE REPORT SHALL INCLUDE THE CAUSE OF THE DISCHARGE AND CORRECTIVE ACTIONS TAKEN.

3. THE OPERATOR SHALL ENSURE THAT ADJACENT PROPERTIES ARE NOT IMPACTED BY WIND EROSION, OR EMISSIONS OF UNCONFINED PARTICULATE MATTER IN ACCORDANCE WITH RULE 62-296.320(4)(C)1, F.A.C., BY TAKING APPROPRIATE MEASURES TO STABILIZE AFFECTED AREAS.

4. FUEL AND OTHER PETROLEUM PRODUCT SPILLS THAT ENTER STORMWATER DRAINS OR WATERBODIES, OR FUEL AND OTHER PETROLEUM PRODUCT SPILLS THAT ARE IN EXCESS OF 25 GALLONS SHALL BE CONTAINED, CLEANED UP, AND IMMEDIATELY REPORTED TO WATER RESOURCES. SMALLER GROUND SURFACE SPILLS SHALL BE CLEANED UP AS SOON AS PRACTICAL.

5. IF CONTAMINATED SOIL AND/OR GROUNDWATER IS DISCOVERED DURING DEVELOPMENT OF THE SITE, ALL ACTIVITY IN THE VICINITY OF THE CONTAMINATION SHALL IMMEDIATELY CEASE, AND WATER RESOURCES SHALL BE CONTACTED.

6. PRIOR TO DEMOLITION OF EXISTING ON SITE STRUCTURES AN ASBESTOS SURVEY AND/OR ASBESTOS NOTIFICATION MAY BE REQUIRED.

7. NATIONAL POLLUTANT DISCHARGE ELIMINATION SYSTEM:
   A. NPDES CONSTRUCTION GENERIC PERMIT COVERAGE SHALL BE OBTAINED AT LEAST 48 HOURS IN ADVANCE OF CONSTRUCTION COMMENCEMENT IN ACCORDANCE WITH RULE 62-621.300(4)(a), F.A.C.
   B. A COPY OF THE CERTIFIED NPDES NOI, OR A COPY OF THE FDEP COVERAGE CONFIRMATION LETTER SHALL BE POSTED AT THE SITE IN ACCORDANCE WITH RULE 62-621.300(4)(A) PART III.C.2, F.A.C.
   C. A COPY OF THE CERTIFIED NPDES NOI, OR A COPY OF THE FDEP COVERAGE CONFIRMATION LETTER SHALL BE PROVIDED TO WATER RESOURCES IN ACCORDANCE WITH RULE 62-621.300(4)(a)PART III.D.1., F.A.C.
   D. THE SWPPP SHALL BE CERTIFIED IN ACCORDANCE WITH RULE 62-621.300(4)(a)PART V.D.6, F.A.C.
   E. A COPY OF THE SWPPP, AND COPIES OF THE INSPECTION AND MAINTENANCE RECORDS SHALL BE MAINTAINED AT THE PROJECT SITE, AND SHALL BE READILY AVAILABLE TO COUNTY OR STATE INSPECTORS.

8. THE DISCHARGE OF GROUNDWATER PRODUCED THROUGH DEWATERING, TO SURFACE WATERS, OR ANY PORTION OF THE MS4 WILL REQUIRE SEPARATE PERMITTING FROM THE FLORIDA DEPARTMENT OF ENVIRONMENTAL PROTECTION (DEP). PERMIT(S) SHALL BE OBTAINED PRIOR TO THE COMMENCEMENT OF DEWATERING.

MAINTENANCE NOTES:

N.P.D.E.S. PERMIT COMPLIANCE REQUIRES INSPECTIONS EVERY 7 CALENDAR DAYS BY A NPDES QUALIFIED INSPECTOR AND PERIODIC INSPECTIONS WITHIN 24 HOURS OF ANY RAINFALL EVENT OF 0.5 INCHES OR GREATER. THESE INSPECTIONS MAY RESULT IN RECOMMENDATIONS FOR ROUTINE MAINTENANCE OF THE SOIL EROSION CONTROL DEVICES, AS WELL AS FURTHER MAINTENANCE AS OUTLINED BELOW.

1. THROUGHOUT THE CONSTRUCTION PERIOD, ALL MUD/SILT TRACKED ONTO EXISTING FDOT ROADS FROM THE SITE DUE TO CONSTRUCTION SHALL BE IMMEDIATELY REMOVED BY THE CONTRACTOR.

2. CATCH BASIN INLET AND CONCRETE FLUME FILTERS SHALL BE MAINTAINED CLEAN AT ALL TIMES THROUGHOUT THE CONSTRUCTION PERIOD. WEEKLY INSPECTIONS WILL BE PERFORMED EVERY 7 CALENDAR DAYS. IF A FILTER HAS HOLES OR IS INUNDATED WITH SEDIMENT, THE FILTER WILL REQUIRE REPLACEMENT.

3. CONSTRUCTION ACCESS AND TRACKING MAT MUST BE MAINTAINED AS NECESSARY. REPLENISH CRUSHED AGGREGATE IF PRESENT LAYER IS FILLED WITH SEDIMENT, POOLING WATER OR HAS RUTS. A NEW LAYER MAY BE ADDED IF OLD LAYERS BECOME COMPACTED.

4. SILT FENCE IS TO BE INSPECTED DAILY BY CONTRACTOR AND EVERY 7 CALENDAR DAYS BY NPDES QUALIFIED INSPECTOR. IF REPAIRS OR REPLACEMENT IS NECESSARY, IT SHALL BE PERFORMED IMMEDIATELY. THE SILT FENCE SHOULD BE TRENCHED IN, BACK-FILLED, AND STAPLED OR STAKED ACCORDING TO THE MANUFACTURER'S SPECIFICATIONS. MAINTENANCE INCLUDES THE REMOVING OF BUILT-UP SEDIMENT. WHEN THE SEDIMENT ACCUMULATES TO 1/3 OF THE HEIGHT OF THE FENCE, CONTRACTOR MAY HAVE TO REMOVE, REPLACE, RETRENCH, OR RE-BACKFILL THE FENCE IF IT FAILS. IT WOULD ALSO BE NECESSARY TO REINSTALL IF ANY PORTION OF THE FENCING WAS DAMAGED BY CONSTRUCTION MACHINERY.

5. SEEDING OR RESEEDING MAY BE REQUIRED IMMEDIATELY TO AREAS WHICH HAVE BEEN DAMAGED BY RUNOFF.

6. REMOVE ANY VISIBLE SEDIMENT FROM THE POND BOTTOM TO KEEP THE BASIN DESIGNED INFILTRATION PERFORMANCE

7. THE CONTRACTOR SHALL CONTINUOUSLY ENSURE THAT THE PERIMETER OF THE SITE, INCLUDING CONSTRUCTION ENTRANCES, IS SECURED FROM ALLOWING DEBRIS TO LEAVE THE SITE DUE TO CONSTRUCTION ACTIVITY OR RAINFALL EVENTS. A WEEKLY LOG SHALL BE UPDATED AND KEPT ON-SITE IN ACCORDANCE WITH THE NPDES PERMIT. BY BIDDING DOCUMENTS CONTRACTOR ACKNOWLEDGES HE/SHE IS AWARE OF NPDES GUIDELINES AND POLICIES AS WELL AS BEST MANAGEMENT PRACTICES AND ASSUMES SOLE RESPONSIBILITY FOR FINES IMPOSED BY GOVERNMENTAL AGENCIES DUE TO VIOLATIONS.

10 5 2.5 0 10
1"= 10'

BOHLER™ ENGINEERING
SITE CIVIL AND CONSULTING ENGINEERING
LAND SURVEYING
PROGRAM MANAGEMENT
LANDSCAPE ARCHITECTURE
SUSTAINABLE DESIGN
PERMITTING SERVICES
TRANSPORTATION SERVICES

"© COPYRIGHT, DESIGN AND CONTENT OF THIS PLAN IS THE PROPERTY OF BOHLER, LTD. NO USE OR REPRODUCTION OF THIS PLAN IS PERMITTED WITHOUT WRITTEN AUTHORIZATION FROM BOHLER ENGINEERING, LTD. ALL REPRODUCTIONS, COPIES OR USES OF THIS PLAN IN ANY FORM OR MEDIUM, WITHOUT PRIOR WRITTEN AUTHORIZATION OF BOHLER ENGINEERING, LTD. ARE PROHIBITED. THIS PLAN SHALL BE UTILIZED FOR CONSTRUCTION PURPOSES ONLY AFTER THE ISSUANCE OF A CERTIFICATE OF AUTHORIZATION."

REVISIONS

REV	DATE	COMMENT	DRAWN BY / CHECKED BY
1	2019-08-23	CITY OF DELRAY BEACH COMMENTS	LJL / AS
2	2019-09-10	SPRAB COMMENTS	LJL / AS

THIS DRAWING IS INTENDED FOR MUNICIPAL AND/OR AGENCY REVIEW AND APPROVAL. IT IS NOT INTENDED AS A CONSTRUCTION DOCUMENT UNLESS INDICATED OTHERWISE

811 Know what's below. Call before you dig.

ALWAYS CALL 811

It's fast. It's free. It's the law.

ISSUED FOR MUNICIPAL & AGENCY REVIEW & APPROVAL

PROJECT No.:	FLB180120
DRAWN BY:	LJL
CHECKED BY:	AS
DATE:	2019-10-25
CAD I.D.:	FLB180120-OAP-1

PROJECT:

PIERRE DELRAY PHASE I - SPRAB SITE PLAN PACKAGE (AKA SUNTRUST BUILDING)

FOR

CLIENT

ZYSCOVICH ARCHITECTS

PROPOSED DEVELOPMENT

302 E ATLANTIC AVE
PALM BEACH COUNTY
DELRAY BEACH, FL

BOHLER ENGINEERING
2255 GLADES ROAD, SUITE 305E
BOCA RATON, FLORIDA 33431
Phone: (561) 571-0280
Fax: (561) 571-0281
FLORIDA BUSINESS CERT. OF AUTH. No. 30780
LANDSCAPE ARCHITECT BUSINESS LIC. No LC26000551

SHEET TITLE:

EROSION AND SEDIMENTATION CONTROL PLAN PHASE I

SHEET NUMBER:

C-602

REVISION 2 - 2019-09-10

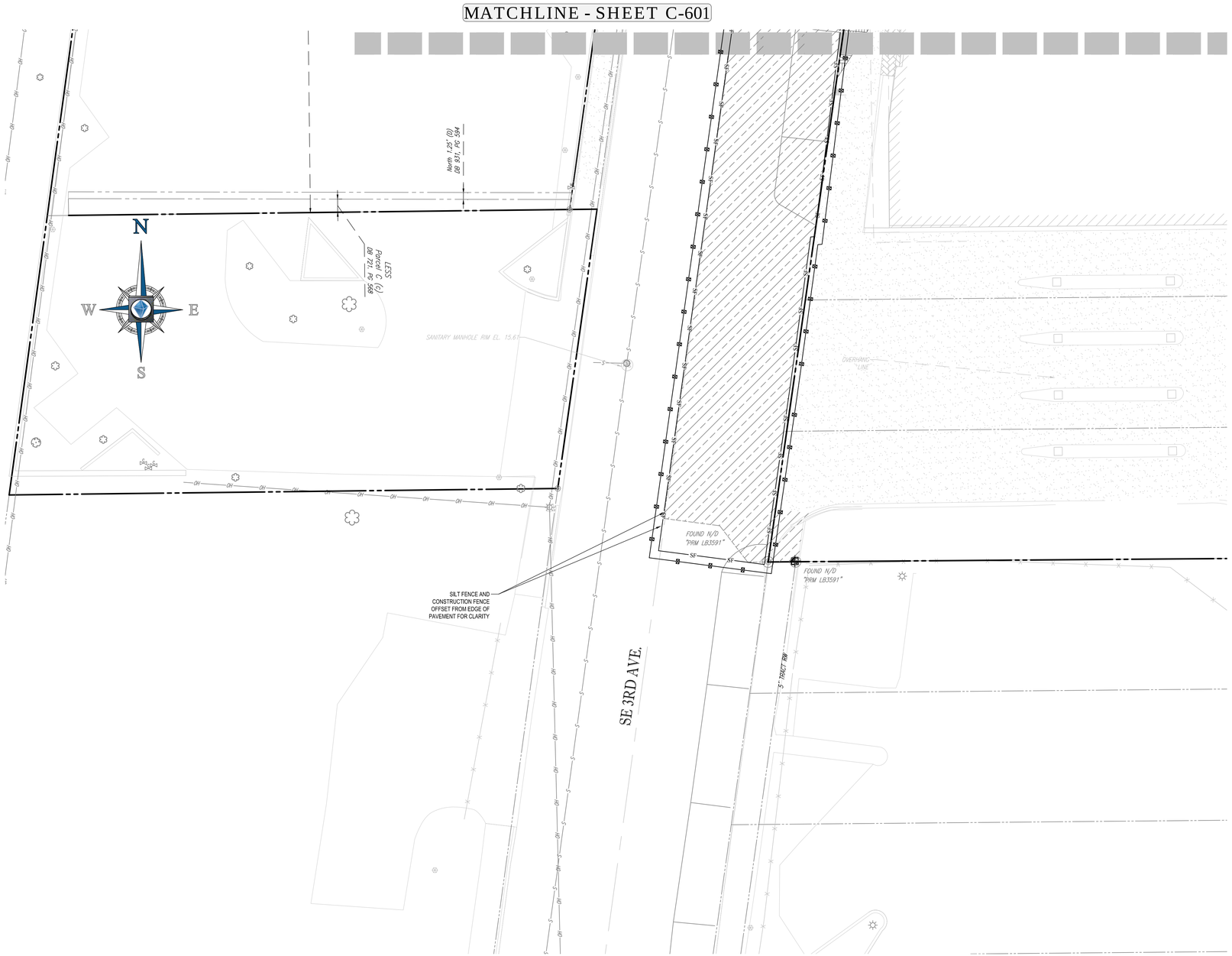

LEGEND:

- PROPERTY LINE
- EXIST. DRAINAGE STRUCTURES
- EXIST. STORM SEWER
- PROP SILT FENCE
- PROP CONSTRUCTION FENCE
- PROP SOIL TRACKING PREVENTION MAT
- PROP INLET PROTECTION

POLLUTION PREVENTION NOTES:

1. EROSION AND SEDIMENT CONTROL BMP'S IN ADDITION TO THOSE PRESENTED ON THESE PLANS SHALL BE IMPLEMENTED AS NECESSARY TO PREVENT TURBID DISCHARGES FROM FLOWING ONTO ADJACENT PROPERTIES OR ROADWAYS, OFF SITE STORMWATER CONVEYANCES OR RECEIVING WATERS, OR ON SITE WETLANDS AND SURFACE WATERS. BMP'S SHALL BE DESIGNED, INSTALLED, AND MAINTAINED BY THE SITE OPERATOR TO ENSURE THAT OFF SITE SURFACE WATER QUALITY REMAINS CONSISTENT WITH STATE AND LOCAL REGULATIONS. [THE OPERATOR IS THE ENTITY THAT OWNS OR OPERATES THE CONSTRUCTION ACTIVITY AND HAS AUTHORITY TO CONTROL THOSE ACTIVITIES AT THE PROJECT NECESSARY TO ENSURE COMPLIANCE.]

2. OFF SITE SURFACE WATER DISCHARGES, OR DISCHARGES TO ONSITE WETLANDS OR SURFACE WATERS WITH TURBIDITY IN EXCESS OF 29 NEPHELOMETRIC TURBIDITY UNITS (NTU'S) ABOVE BACKGROUND LEVEL SHALL BE IMMEDIATELY CORRECTED. SUCH INCIDENTS SHALL BE REPORTED TO WATER RESOURCES WITHIN 24 HOURS OF THE OCCURRENCE. THE REPORT SHALL INCLUDE THE CAUSE OF THE DISCHARGE AND CORRECTIVE ACTIONS TAKEN.

3. THE OPERATOR SHALL ENSURE THAT ADJACENT PROPERTIES ARE NOT IMPACTED BY WIND EROSION, OR EMISSIONS OF UNCONFINED PARTICULATE MATTER IN ACCORDANCE WITH RULE 62-296.320(4)(C)1, F.A.C., BY TAKING APPROPRIATE MEASURES TO STABILIZE AFFECTED AREAS.

4. FUEL AND OTHER PETROLEUM PRODUCT SPILLS THAT ENTER STORMWATER DRAINS OR WATERBODIES, OR FUEL AND OTHER PETROLEUM PRODUCT SPILLS THAT ARE IN EXCESS OF 25 GALLONS SHALL BE CONTAINED, CLEANED UP, AND IMMEDIATELY REPORTED TO WATER RESOURCES. SMALLER GROUND SURFACE SPILLS SHALL BE CLEANED UP AS SOON AS PRACTICAL.

5. IF CONTAMINATED SOIL AND/OR GROUNDWATER IS DISCOVERED DURING DEVELOPMENT OF THE SITE, ALL ACTIVITY IN THE VICINITY OF THE CONTAMINATION SHALL IMMEDIATELY CEASE, AND WATER RESOURCES SHALL BE CONTACTED.

6. PRIOR TO DEMOLITION OF EXISTING ON SITE STRUCTURES AN ASBESTOS SURVEY AND/OR ASBESTOS NOTIFICATION MAY BE REQUIRED.

7. NATIONAL POLLUTANT DISCHARGE ELIMINATION SYSTEM:
   - A. NPDES CONSTRUCTION GENERIC PERMIT COVERAGE SHALL BE OBTAINED AT LEAST 48 HOURS IN ADVANCE OF CONSTRUCTION COMMENCEMENT IN ACCORDANCE WITH RULE 62-621.300(4)(a), F.A.C.
   - B. A COPY OF THE CERTIFIED NPDES NOI, OR A COPY OF THE FDEP COVERAGE CONFIRMATION LETTER SHALL BE POSTED AT THE SITE IN ACCORDANCE WITH RULE 62-621.300(4)(A) PART III.C.2, F.A.C.
   - C. A COPY OF THE CERTIFIED NPDES NOI, OR A COPY OF THE FDEP COVERAGE CONFIRMATION LETTER SHALL BE PROVIDED TO WATER RESOURCES IN ACCORDANCE WITH RULE 62-621.300(4)(a)PART III.D.1, F.A.C.
   - D. THE SWPPP SHALL BE CERTIFIED IN ACCORDANCE WITH RULE 62-621.300(4)(a)PART V.D.6, F.A.C.
   - E. A COPY OF THE SWPPP, AND COPIES OF THE INSPECTION AND MAINTENANCE RECORDS SHALL BE MAINTAINED AT THE PROJECT SITE, AND SHALL BE READILY AVAILABLE TO COUNTY OR STATE INSPECTORS.

8. THE DISCHARGE OF GROUNDWATER PRODUCED THROUGH DEWATERING, TO SURFACE WATERS, OR ANY PORTION OF THE MS4 WILL REQUIRE SEPARATE PERMITTING FROM THE FLORIDA DEPARTMENT OF ENVIRONMENTAL PROTECTION (DEP). PERMIT(S) SHALL BE OBTAINED PRIOR TO THE COMMENCEMENT OF DEWATERING.

MAINTENANCE NOTES:

N.P.D.E.S. PERMIT COMPLIANCE REQUIRES INSPECTIONS EVERY 7 CALENDAR DAYS BY A NPDES QUALIFIED INSPECTOR AND PERIODIC INSPECTIONS WITHIN 24 HOURS OF ANY RAINFALL EVENT OF 0.5 INCHES OR GREATER. THESE INSPECTIONS MAY RESULT IN RECOMMENDATIONS FOR ROUTINE MAINTENANCE OF THE SOIL EROSION CONTROL DEVICES, AS WELL AS FURTHER MAINTENANCE AS OUTLINED BELOW.

1. THROUGHOUT THE CONSTRUCTION PERIOD, ALL MUD/SILT TRACKED ONTO EXISTING FDOT ROADS FROM THE SITE DUE TO CONSTRUCTION SHALL BE IMMEDIATELY REMOVED BY THE CONTRACTOR.

2. CATCH BASIN INLET AND CONCRETE FLUME FILTERS SHALL BE MAINTAINED CLEAN AT ALL TIMES THROUGHOUT THE CONSTRUCTION PERIOD. WEEKLY INSPECTIONS WILL BE PERFORMED EVERY 7 CALENDAR DAYS. IF A FILTER HAS HOLES OR IS INUNDATED WITH SEDIMENT, THE FILTER WILL REQUIRE REPLACEMENT.

3. CONSTRUCTION ACCESS AND TRACKING MAT MUST BE MAINTAINED AS NECESSARY. REPLENISH CRUSHED AGGREGATE IF PRESENT LAYER IS FILLED WITH SEDIMENT, POOLING WATER OR HAS RUTS. A NEW LAYER MAY BE ADDED IF OLD LAYERS BECOME COMPACTED.

4. SILT FENCE IS TO BE INSPECTED DAILY BY CONTRACTOR AND EVERY 7 CALENDAR DAYS BY NPDES QUALIFIED INSPECTOR. IF REPAIRS OR REPLACEMENT IS NECESSARY, IT SHALL BE PERFORMED IMMEDIATELY. THE SILT FENCE SHOULD BE TRENCHED IN, BACK-FILLED, AND STAPLED OR STAKED ACCORDING TO THE MANUFACTURER'S SPECIFICATIONS. MAINTENANCE INCLUDES THE REMOVING OF BUILT-UP SEDIMENT. WHEN THE SEDIMENT ACCUMULATES TO 1/3 OF THE HEIGHT OF THE FENCE. CONTRACTOR MAY HAVE TO REMOVE, REPLACE, RETRENCH, OR RE-BACKFILL THE FENCE IF IT FAILS. IT WOULD ALSO BE NECESSARY TO REINSTALL IF ANY PORTION OF THE FENCING WAS DAMAGED BY CONSTRUCTION MACHINERY.

5. SEEDING OR RESEEDING MAY BE REQUIRED IMMEDIATELY TO AREAS WHICH HAVE BEEN DAMAGED BY RUNOFF.

6. REMOVE ANY VISIBLE SEDIMENT FROM THE POND BOTTOM TO KEEP THE BASIN DESIGNED INFILTRATION PERFORMANCE

7. THE CONTRACTOR SHALL CONTINUOUSLY ENSURE THAT THE PERIMETER OF THE SITE, INCLUDING CONSTRUCTION ENTRANCES, IS SECURED FROM ALLOWING DEBRIS TO LEAVE THE SITE DUE TO CONSTRUCTION ACTIVITY OR RAINFALL EVENTS. A WEEKLY LOG SHALL BE UPDATED AND KEPT ON-SITE IN ACCORDANCE WITH THE NPDES PERMIT. BY BIDDING DOCUMENTS CONTRACTOR ACKNOWLEDGES HE/SHE IS AWARE OF NPDES GUIDELINES AND POLICIES AS WELL AS BEST MANAGEMENT PRACTICES AND ASSUMES SOLE RESPONSIBILITY FOR FINES IMPOSED BY GOVERNMENTAL AGENCIES DUE TO VIOLATIONS.

10 5 2.5 0 10
1"= 10'

BOHLER ENGINEERING
SITE CIVIL AND CONSULTING ENGINEERING
LAND SURVEYING
PROGRAM MANAGEMENT
LANDSCAPE ARCHITECTURE
SUSTAINABLE DESIGN
PERMITTING SERVICES
TRANSPORTATION SERVICES

THE INFORMATION, DESIGN AND CONTENT OF THIS PLAN ARE PROPRIETARY AND SHALL NOT BE COPIED OR USED FOR ANY PURPOSE WITHOUT PRIOR WRITTEN AUTHORIZATION FROM BOHLER ENGINEERING. ONLY THOSE PLANS OFFICially ISSUED FOR CONSTRUCTION SHALL BE UTILIZED FOR CONSTRUCTION PURPOSES.

REVISIONS

REV	DATE	COMMENT	DRAWN BY / CHECKED BY
1	2019-08-23	CITY OF DELRAY BEACH COMMENTS	LJL / AS
2	2019-09-10	SPRAB COMMENTS	LJL / AS

THIS DRAWING IS INTENDED FOR MUNICIPAL AND/OR AGENCY REVIEW AND APPROVAL. IT IS NOT INTENDED AS A CONSTRUCTION DOCUMENT UNLESS INDICATED OTHERWISE.

811 Know what's below. Call before you dig.
ALWAYS CALL 811
It's fast. It's free. It's the law.

ISSUED FOR MUNICIPAL & AGENCY REVIEW & APPROVAL

PROJECT No.:	FLB180120
DRAWN BY:	LJL
CHECKED BY:	AS
DATE:	2019-10-25
CAD I.D.:	FLB180120-OAP-1

PROJECT:
PIERRE DELRAY PHASE I - SPRAB SITE PLAN PACKAGE (AKA SUNTRUST BUILDING)

FOR

CLIENT
ZYSCOVICH ARCHITECTS

PROPOSED DEVELOPMENT
302 E ATLANTIC AVE
PALM BEACH COUNTY
DELRAY BEACH, FL

BOHLER ENGINEERING
2255 GLADES ROAD, SUITE 305E
BOCA RATON, FLORIDA 33431
Phone: (561) 571-0280
Fax: (561) 571-0281
FLORIDA BUSINESS CERT. OF AUTH. No. 30780
LANDSCAPE ARCHITECT BUSINESS LIC. No. LC26000551

SHEET TITLE:
EROSION AND SEDIMENTATION CONTROL PLAN PHASE I

SHEET NUMBER:
C-603

REVISION 2 - 2019-09-10

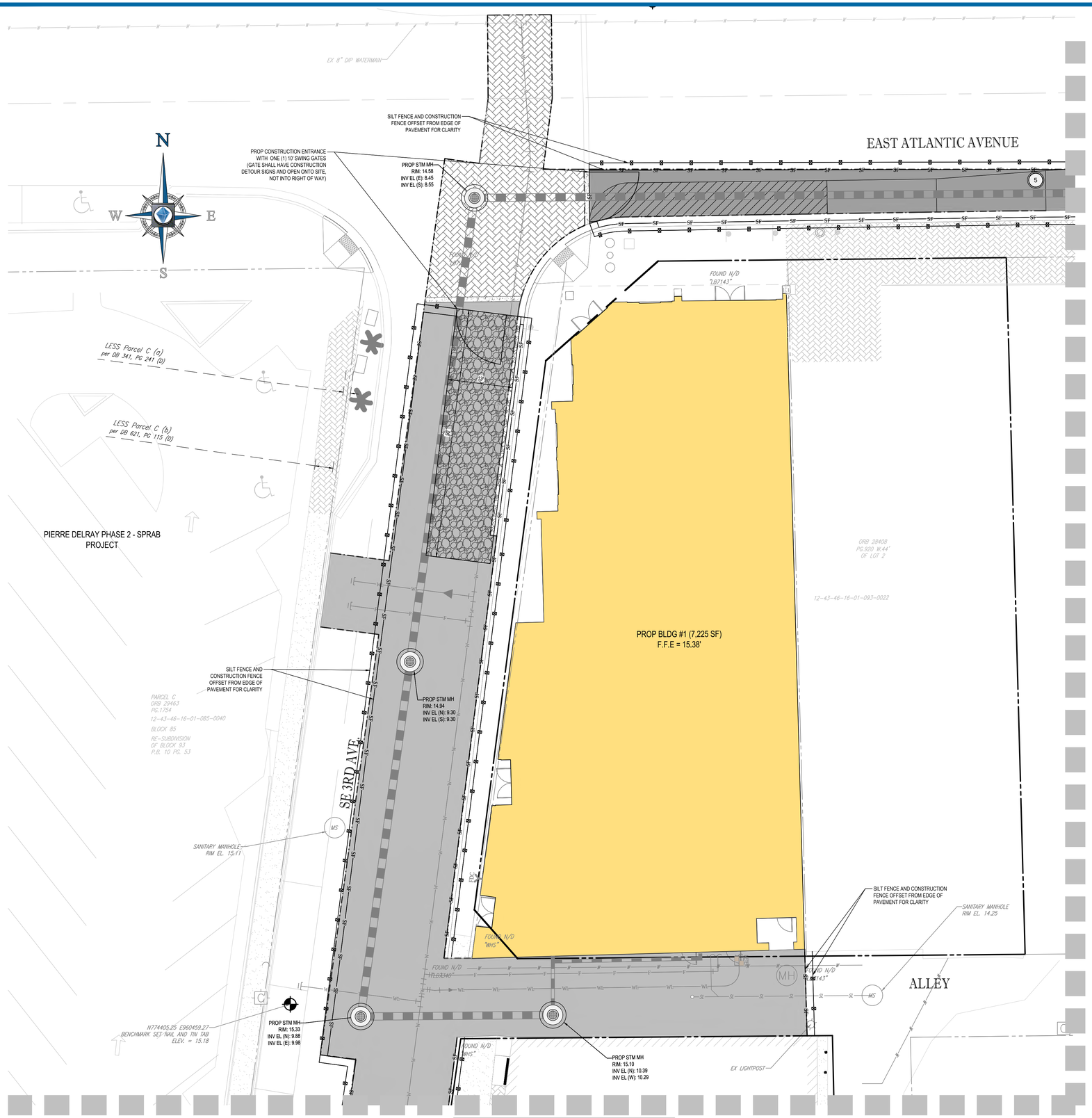

LEGEND:

- PROPERTY LINE
- EXIST. DRAINAGE STRUCTURES
- EXIST. STORM SEWER
- PROP SILT FENCE
- PROP CONSTRUCTION FENCE
- PROP SOIL TRACKING PREVENTION MAT
- PROP INLET PROTECTION

POLLUTION PREVENTION NOTES:

1. EROSION AND SEDIMENT CONTROL BMP'S IN ADDITION TO THOSE PRESENTED ON THESE PLANS SHALL BE IMPLEMENTED AS NECESSARY TO PREVENT TURBID DISCHARGES FROM FLOWING ONTO ADJACENT PROPERTIES OR ROADWAYS, OFF SITE STORMWATER CONVEYANCES OR RECEIVING WATERS, OR ON SITE WETLANDS AND SURFACE WATERS. BMP'S SHALL BE DESIGNED, INSTALLED, AND MAINTAINED BY THE SITE OPERATOR TO ENSURE THAT OFF SITE SURFACE WATER QUALITY REMAINS CONSISTENT WITH STATE AND LOCAL REGULATIONS. [THE OPERATOR IS THE ENTITY THAT OWNS OR OPERATES THE CONSTRUCTION ACTIVITY AND HAS AUTHORITY TO CONTROL THOSE ACTIVITIES AT THE PROJECT NECESSARY TO ENSURE COMPLIANCE.]
2. OFF SITE SURFACE WATER DISCHARGES, OR DISCHARGES TO ONSITE WETLANDS OR SURFACE WATERS WITH TURBIDITY IN EXCESS OF 29 NEPHELOMETRIC TURBIDITY UNITS (NTUS) ABOVE BACKGROUND LEVEL SHALL BE IMMEDIATELY CORRECTED. SUCH INCIDENTS SHALL BE REPORTED TO WATER RESOURCES WITHIN 24 HOURS OF THE OCCURRENCE. THE REPORT SHALL INCLUDE THE CAUSE OF THE DISCHARGE AND CORRECTIVE ACTIONS TAKEN.
3. THE OPERATOR SHALL ENSURE THAT ADJACENT PROPERTIES ARE NOT IMPACTED BY WIND EROSION, OR EMISSIONS OF UNCONFINED PARTICULATE MATTER IN ACCORDANCE WITH RULE 62-296.320(4)(C)1, F.A.C., BY TAKING APPROPRIATE MEASURES TO STABILIZE AFFECTED AREAS.
4. FUEL AND OTHER PETROLEUM PRODUCT SPILLS THAT ENTER STORMWATER DRAINS OR WATERBODIES, OR FUEL AND OTHER PETROLEUM PRODUCT SPILLS THAT ARE IN EXCESS OF 25 GALLONS SHALL BE CONTAINED, CLEANED UP, AND IMMEDIATELY REPORTED TO WATER RESOURCES. SMALLER GROUND SURFACE SPILLS SHALL BE CLEANED UP AS SOON AS PRACTICAL.
5. IF CONTAMINATED SOIL AND/OR GROUNDWATER IS DISCOVERED DURING DEVELOPMENT OF THE SITE, ALL ACTIVITY IN THE VICINITY OF THE CONTAMINATION SHALL IMMEDIATELY CEASE, AND WATER RESOURCES SHALL BE CONTACTED.
6. PRIOR TO DEMOLITION OF EXISTING ON SITE STRUCTURES AN ASBESTOS SURVEY AND/OR ASBESTOS NOTIFICATION MAY BE REQUIRED.
7. NATIONAL POLLUTANT DISCHARGE ELIMINATION SYSTEM:
   - A. NPDES CONSTRUCTION GENERIC PERMIT COVERAGE SHALL BE OBTAINED AT LEAST 48 HOURS IN ADVANCE OF CONSTRUCTION COMMENCEMENT IN ACCORDANCE WITH RULE 62-621.300(4)(a), F.A.C.
   - B. A COPY OF THE CERTIFIED NPDES NOI, OR A COPY OF THE FDEP COVERAGE CONFIRMATION LETTER SHALL BE POSTED AT THE SITE IN ACCORDANCE WITH RULE 62-621.300(4)(A) PART III.C.2, F.A.C.
   - C. A COPY OF THE CERTIFIED NPDES NOI, OR A COPY OF THE FDEP COVERAGE CONFIRMATION LETTER SHALL BE PROVIDED TO WATER RESOURCES IN ACCORDANCE WITH RULE 62-621.300(4)(a)PART III.D.1, F.A.C.
   - D. THE SWPPP SHALL BE CERTIFIED IN ACCORDANCE WITH RULE 62-621.300(4)(a)PART V.D.6, F.A.C.
   - E. A COPY OF THE SWPPP, AND COPIES OF THE INSPECTION AND MAINTENANCE RECORDS SHALL BE MAINTAINED AT THE PROJECT SITE, AND SHALL BE READILY AVAILABLE TO COUNTY OR STATE INSPECTORS.
8. THE DISCHARGE OF GROUNDWATER PRODUCED THROUGH DEWATERING, TO SURFACE WATERS, OR ANY PORTION OF THE MS4 WILL REQUIRE SEPARATE PERMITTING FROM THE FLORIDA DEPARTMENT OF ENVIRONMENTAL PROTECTION (DEP). PERMIT(S) SHALL BE OBTAINED PRIOR TO THE COMMENCEMENT OF DEWATERING.

MAINTENANCE NOTES:

N.P.D.E.S. PERMIT COMPLIANCE REQUIRES INSPECTIONS EVERY 7 CALENDAR DAYS BY A NPDES QUALIFIED INSPECTOR AND PERIODIC INSPECTIONS WITHIN 24 HOURS OF ANY RAINFALL EVENT OF 0.5 INCHES OR GREATER. THESE INSPECTIONS MAY RESULT IN RECOMMENDATIONS FOR ROUTINE MAINTENANCE OF THE SOIL EROSION CONTROL DEVICES, AS WELL AS FURTHER MAINTENANCE AS OUTLINED BELOW.

1. THROUGHOUT THE CONSTRUCTION PERIOD, ALL MUD/SILT TRACKED ONTO EXISTING FDOT ROADS FROM THE SITE DUE TO CONSTRUCTION SHALL BE IMMEDIATELY REMOVED BY THE CONTRACTOR.
2. CATCH BASIN INLET AND CONCRETE FLUME FILTERS SHALL BE MAINTAINED CLEAN AT ALL TIMES THROUGHOUT THE CONSTRUCTION PERIOD. WEEKLY INSPECTIONS WILL BE PERFORMED EVERY 7 CALENDAR DAYS. IF A FILTER HAS HOLES OR IS INUNDATED WITH SEDIMENT, THE FILTER WILL REQUIRE REPLACEMENT.
3. CONSTRUCTION ACCESS AND TRACKING MAT MUST BE MAINTAINED AS NECESSARY. REPLENISH CRUSHED AGGREGATE IF PRESENT LAYER IS FILLED WITH SEDIMENT, POOLING WATER OR HAS RUTS. A NEW LAYER MAY BE ADDED IF OLD LAYERS BECOME COMPACTED.
4. SILT FENCE IS TO BE INSPECTED DAILY BY CONTRACTOR AND EVERY 7 CALENDAR DAYS BY NPDES QUALIFIED INSPECTOR. IF REPAIRS OR REPLACEMENT IS NECESSARY, IT SHALL BE PERFORMED IMMEDIATELY. THE SILT FENCE SHOULD BE TRENCHED IN, BACK-FILLED, AND STAPLED OR STAKED ACCORDING TO THE MANUFACTURER'S SPECIFICATIONS. MAINTENANCE INCLUDES THE REMOVING OF BUILT-UP SEDIMENT. WHEN THE SEDIMENT ACCUMULATES TO 1/3 OF THE HEIGHT OF THE FENCE, CONTRACTOR MAY HAVE TO REMOVE, REPLACE, RETRENCH, OR RE-BACKFILL THE FENCE IF IT FAILS. IT WOULD ALSO BE NECESSARY TO REINSTALL IF ANY PORTION OF THE FENCING WAS DAMAGED BY CONSTRUCTION MACHINERY.
5. SEEDING OR RESEEDING MAY BE REQUIRED IMMEDIATELY TO AREAS WHICH HAVE BEEN DAMAGED BY RUNOFF.
6. REMOVE ANY VISIBLE SEDIMENT FROM THE POND BOTTOM TO KEEP THE BASIN DESIGNED INFILTRATION PERFORMANCE
7. THE CONTRACTOR SHALL CONTINUOUSLY ENSURE THAT THE PERIMETER OF THE SITE, INCLUDING CONSTRUCTION ENTRANCES, IS SECURED FROM ALLOWING DEBRIS TO LEAVE THE SITE DUE TO CONSTRUCTION ACTIVITY OR RAINFALL EVENTS. A WEEKLY LOG SHALL BE UPDATED AND KEPT ON-SITE IN ACCORDANCE WITH THE NPDES PERMIT. BY BIDDING DOCUMENTS CONTRACTOR ACKNOWLEDGES HE/SHE IS AWARE OF NPDES GUIDELINES AND POLICIES AS WELL AS BEST MANAGEMENT PRACTICES AND ASSUMES SOLE RESPONSIBILITY FOR FINES IMPOSED BY GOVERNMENTAL AGENCIES DUE TO VIOLATIONS.

10 5 2.5 0 10
1"=10'

BOHLER ENGINEERING
SITE CIVIL AND CONSULTING ENGINEERING
LAND SURVEYING
PROGRAM MANAGEMENT
LANDSCAPE ARCHITECTURE
SUSTAINABLE DESIGN
PERMITTING SERVICES
TRANSPORTATION SERVICES

THE INFORMATION, DESIGN AND CONTENT OF THIS PLAN ARE PROPRIETARY AND SHALL NOT BE COPIED OR USED FOR ANY PURPOSE WITHOUT PRIOR WRITTEN AUTHORIZATION FROM BOHLER ENGINEERING. ONLY THE PLANS AND SPECIFICATIONS SIGNED AND SEALED BY A LICENSED PROFESSIONAL ENGINEER SHALL BE UTILIZED FOR CONSTRUCTION PURPOSES.

REVISIONS

REV	DATE	COMMENT	DRAWN BY / CHECKED BY
1	2019-08-23	CITY OF DELRAY BEACH COMMENTS	LJL / AS
2	2019-09-10	SPRAB COMMENTS	LJL / AS

THIS DRAWING IS INTENDED FOR MUNICIPAL AND/OR AGENCY REVIEW AND APPROVAL. IT IS NOT INTENDED AS A CONSTRUCTION DOCUMENT UNLESS INDICATED OTHERWISE.

811 Know what's below. Call before you dig.
ALWAYS CALL 811
It's fast. It's free. It's the law.

ISSUED FOR MUNICIPAL & AGENCY REVIEW & APPROVAL

PROJECT No.:	FLB180120
DRAWN BY:	LJL
CHECKED BY:	AS
DATE:	2019-10-25
CAD I.D.:	FLB180120-OBP-1

PROJECT:
PIERRE DELRAY PHASE 1 - SPRAB SITE PLAN PACKAGE (AKA SUNTRUST BUILDING)
FOR
CLIENT
ZYSCOVICH ARCHITECTS
PROPOSED DEVELOPMENT
302 E ATLANTIC AVE
PALM BEACH COUNTY
DELRAY BEACH, FL

BOHLER ENGINEERING
2255 GLADES ROAD, SUITE 305E
BOCA RATON, FLORIDA 33431
Phone: (561) 571-0280
Fax: (561) 571-0281
FLORIDA BUSINESS CERT. OF AUTH. No. 30780
LANDSCAPE ARCHITECT BUSINESS LIC. No LC26000551

SHEET TITLE:
EROSION AND SEDIMENTATION CONTROL PLAN PHASE II

SHEET NUMBER:
C-604

REVISION 2 - 2019-09-10

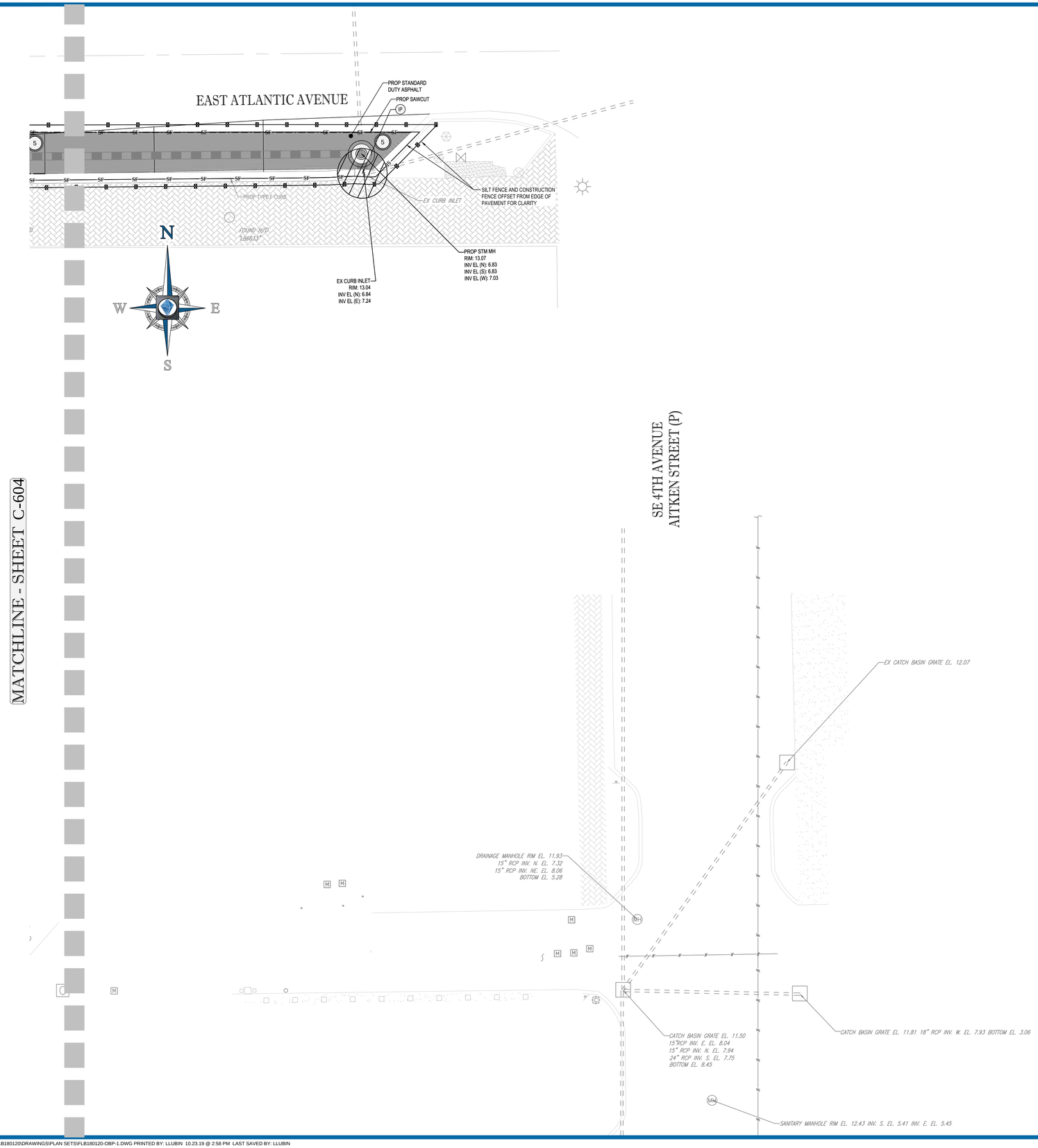

LEGEND:

- PROPERTY LINE
- EXIST. DRAINAGE STRUCTURES
- EXIST. STORM SEWER
- PROP SILT FENCE
- PROP CONSTRUCTION FENCE
- PROP SOIL TRACKING PREVENTION MAT
- PROP INLET PROTECTION

POLLUTION PREVENTION NOTES:

1. EROSION AND SEDIMENT CONTROL BMP'S IN ADDITION TO THOSE PRESENTED ON THESE PLANS SHALL BE IMPLEMENTED AS NECESSARY TO PREVENT TURBID DISCHARGES FROM FLOWING ONTO ADJACENT PROPERTIES OR ROADWAYS, OFF SITE STORMWATER CONVEYANCES OR RECEIVING WATERS, OR ON SITE WETLANDS AND SURFACE WATERS. BMP'S SHALL BE DESIGNED, INSTALLED, AND MAINTAINED BY THE SITE OPERATOR TO ENSURE THAT OFF SITE SURFACE WATER QUALITY REMAINS CONSISTENT WITH STATE AND LOCAL REGULATIONS. [THE OPERATOR IS THE ENTITY THAT OWNS OR OPERATES THE CONSTRUCTION ACTIVITY AND HAS AUTHORITY TO CONTROL THOSE ACTIVITIES AT THE PROJECT NECESSARY TO ENSURE COMPLIANCE.]
2. OFF SITE SURFACE WATER DISCHARGES, OR DISCHARGES TO ONSITE WETLANDS OR SURFACE WATERS WITH TURBIDITY IN EXCESS OF 29 NEPHELOMETRIC TURBIDITY UNITS (NTU'S) ABOVE BACKGROUND LEVEL SHALL BE IMMEDIATELY CORRECTED. SUCH INCIDENTS SHALL BE REPORTED TO WATER RESOURCES WITHIN 24 HOURS OF THE OCCURRENCE. THE REPORT SHALL INCLUDE THE CAUSE OF THE DISCHARGE AND CORRECTIVE ACTIONS TAKEN.
3. THE OPERATOR SHALL ENSURE THAT ADJACENT PROPERTIES ARE NOT IMPACTED BY WIND EROSION, OR EMISSIONS OF UNCONFINED PARTICULATE MATTER IN ACCORDANCE WITH RULE 62-296.320(4)(C)1, F.A.C., BY TAKING APPROPRIATE MEASURES TO STABILIZE AFFECTED AREAS.
4. FUEL AND OTHER PETROLEUM PRODUCT SPILLS THAT ENTER STORMWATER DRAINS OR WATERBODIES, OR FUEL AND OTHER PETROLEUM PRODUCT SPILLS THAT ARE IN EXCESS OF 25 GALLONS SHALL BE CONTAINED, CLEANED UP, AND IMMEDIATELY REPORTED TO WATER RESOURCES. SMALLER GROUND SURFACE SPILLS SHALL BE CLEANED UP AS SOON AS PRACTICAL.
5. IF CONTAMINATED SOIL AND/OR GROUNDWATER IS DISCOVERED DURING DEVELOPMENT OF THE SITE, ALL ACTIVITY IN THE VICINITY OF THE CONTAMINATION SHALL IMMEDIATELY CEASE, AND WATER RESOURCES SHALL BE CONTACTED.
6. PRIOR TO DEMOLITION OF EXISTING ON SITE STRUCTURES AN ASBESTOS SURVEY AND/OR ASBESTOS NOTIFICATION MAY BE REQUIRED.
7. NATIONAL POLLUTANT DISCHARGE ELIMINATION SYSTEM:
   - A. NPDES CONSTRUCTION GENERIC PERMIT COVERAGE SHALL BE OBTAINED AT LEAST 48 HOURS IN ADVANCE OF CONSTRUCTION COMMENCEMENT IN ACCORDANCE WITH RULE 62-621.300(4)(a), F.A.C.
   - B. A COPY OF THE CERTIFIED NPDES NOI, OR A COPY OF THE FDEP COVERAGE CONFIRMATION LETTER SHALL BE POSTED AT THE SITE IN ACCORDANCE WITH RULE 62-621.300(4)(A) PART III.C.2, F.A.C.
   - C. A COPY OF THE CERTIFIED NPDES NOI, OR A COPY OF THE FDEP COVERAGE CONFIRMATION LETTER SHALL BE PROVIDED TO WATER RESOURCES IN ACCORDANCE WITH RULE 62-621.300(4)(a)PART III.D.1, F.A.C.
   - D. THE SWPPP SHALL BE CERTIFIED IN ACCORDANCE WITH RULE 62-621.300(4)(a)PART V.D.6, F.A.C.
   - E. A COPY OF THE SWPPP, AND COPIES OF THE INSPECTION AND MAINTENANCE RECORDS SHALL BE MAINTAINED AT THE PROJECT SITE, AND SHALL BE READILY AVAILABLE TO COUNTY OR STATE INSPECTORS.
8. THE DISCHARGE OF GROUNDWATER PRODUCED THROUGH DEWATERING, TO SURFACE WATERS, OR ANY PORTION OF THE MS4 WILL REQUIRE SEPARATE PERMITTING FROM THE FLORIDA DEPARTMENT OF ENVIRONMENTAL PROTECTION (DEP). PERMIT(S) SHALL BE OBTAINED PRIOR TO THE COMMENCEMENT OF DEWATERING.

MAINTENANCE NOTES:

N.P.D.E.S. PERMIT COMPLIANCE REQUIRES INSPECTIONS EVERY 7 CALENDAR DAYS BY A NPDES QUALIFIED INSPECTOR AND PERIODIC INSPECTIONS WITHIN 24 HOURS OF ANY RAINFALL EVENT OF 0.5 INCHES OR GREATER. THESE INSPECTIONS MAY RESULT IN RECOMMENDATIONS FOR ROUTINE MAINTENANCE OF THE SOIL EROSION CONTROL DEVICES, AS WELL AS FURTHER MAINTENANCE AS OUTLINED BELOW.

1. THROUGHOUT THE CONSTRUCTION PERIOD, ALL MUD/SILT TRACKED ONTO EXISTING FOOT ROADS FROM THE SITE DUE TO CONSTRUCTION SHALL BE IMMEDIATELY REMOVED BY THE CONTRACTOR.
2. CATCH BASIN INLET AND CONCRETE FLUME FILTERS SHALL BE MAINTAINED CLEAN AT ALL TIMES THROUGHOUT THE CONSTRUCTION PERIOD. WEEKLY INSPECTIONS WILL BE PERFORMED EVERY 7 CALENDAR DAYS. IF A FILTER HAS HOLES OR IS INUNDATED WITH SEDIMENT, THE FILTER WILL REQUIRE REPLACEMENT.
3. CONSTRUCTION ACCESS AND TRACKING MAT MUST BE MAINTAINED AS NECESSARY. REPLENISH CRUSHED AGGREGATE IF PRESENT LAYER IS FILLED WITH SEDIMENT, POOLING WATER OR HAS RUTS. A NEW LAYER MAY BE ADDED IF OLD LAYERS BECOME COMPACTED.
4. SILT FENCE IS TO BE INSPECTED DAILY BY CONTRACTOR AND EVERY 7 CALENDAR DAYS BY NPDES QUALIFIED INSPECTOR. IF REPAIRS OR REPLACEMENT IS NECESSARY, IT SHALL BE PERFORMED IMMEDIATELY. THE SILT FENCE SHOULD BE TRENCHED IN, BACK-FILLED, AND STAPLED OR STAKED ACCORDING TO THE MANUFACTURER'S SPECIFICATIONS. MAINTENANCE INCLUDES THE REMOVING OF BUILT-UP SEDIMENT. WHEN THE SEDIMENT ACCUMULATES TO 1/3 OF THE HEIGHT OF THE FENCE, CONTRACTOR MAY HAVE TO REMOVE, REPLACE, RETRENCH, OR RE-BACKFILL THE FENCE IF IT FAILS. IT WOULD ALSO BE NECESSARY TO REINSTALL IF ANY PORTION OF THE FENCING WAS DAMAGED BY CONSTRUCTION MACHINERY.
5. SEEDING OR RESEEDING MAY BE REQUIRED IMMEDIATELY TO AREAS WHICH HAVE BEEN DAMAGED BY RUNOFF.
6. REMOVE ANY VISIBLE SEDIMENT FROM THE POND BOTTOM TO KEEP THE BASIN DESIGNED INFILTRATION PERFORMANCE
7. THE CONTRACTOR SHALL CONTINUOUSLY ENSURE THAT THE PERIMETER OF THE SITE, INCLUDING CONSTRUCTION ENTRANCES, IS SECURED FROM ALLOWING DEBRIS TO LEAVE THE SITE DUE TO CONSTRUCTION ACTIVITY OR RAINFALL EVENTS. A WEEKLY LOG SHALL BE UPDATED AND KEPT ON-SITE IN ACCORDANCE WITH THE NPDES PERMIT. BY BIDDING DOCUMENTS CONTRACTOR ACKNOWLEDGES HE/SHE IS AWARE OF NPDES GUIDELINES AND POLICIES AS WELL AS BEST MANAGEMENT PRACTICES AND ASSUMES SOLE RESPONSIBILITY FOR FINES IMPOSED BY GOVERNMENTAL AGENCIES DUE TO VIOLATIONS.

10 5 2.5 0 10

1"= 10'

BOHLER ENGINEERING
SITE CIVIL AND CONSULTING ENGINEERING
LAND SURVEYING
PROGRAM MANAGEMENT
LANDSCAPE ARCHITECTURE
SUSTAINABLE DESIGN
PERMITTING SERVICES
TRANSPORTATION SERVICES

THE INFORMATION, DESIGN AND CONTENT OF THIS PLAN ARE PROPRIETARY AND SHALL NOT BE COPIED OR USED FOR ANY PURPOSE WITHOUT PRIOR WRITTEN AUTHORIZATION FROM BOHLER ENGINEERING. ONLY THE PLANS AND SPECIFICATIONS BEARING THE ORIGINAL SIGNATURE AND SEAL OF A LICENSED PROFESSIONAL ENGINEER SHALL BE UTILIZED FOR CONSTRUCTION PURPOSES.

REVISIONS

REV	DATE	COMMENT	DRAWN BY / CHECKED BY
1	2019-08-23	CITY OF DELRAY BEACH COMMENTS	LJL / AS
2	2019-09-10	SPRAB COMMENTS	LJL / AS

THIS DRAWING IS INTENDED FOR MUNICIPAL AND/OR AGENCY REVIEW AND APPROVAL. IT IS NOT INTENDED AS A CONSTRUCTION DOCUMENT UNLESS INDICATED OTHERWISE.

811 Know what's below. Call before you dig.

ALWAYS CALL 811

It's fast. It's free. It's the law.

ISSUED FOR MUNICIPAL & AGENCY REVIEW & APPROVAL

PROJECT No.:	FLB180120
DRAWN BY:	LJL
CHECKED BY:	AS
DATE:	2019-10-25
CAD I.D.:	FLB180120-OBP-1

PROJECT:

PIERRE DELRAY PHASE 1 - SPRAB SITE PLAN PACKAGE (AKA SUNTRUST BUILDING)

FOR

CLIENT

ZYSCOVICH ARCHITECTS

PROPOSED DEVELOPMENT

302 E ATLANTIC AVE
PALM BEACH COUNTY
DELRAY BEACH, FL

BOHLER ENGINEERING
2255 GLADES ROAD, SUITE 305E
BOCA RATON, FLORIDA 33431
Phone: (561) 571-0280
Fax: (561) 571-0281
FLORIDA BUSINESS CERT. OF AUTH. No. 30780
LANDSCAPE ARCHITECT BUSINESS LIC. No LC26000551

SHEET TITLE:

EROSION AND SEDIMENTATION CONTROL PLAN PHASE II

SHEET NUMBER:

C-605

REVISION 2 - 2019-09-10

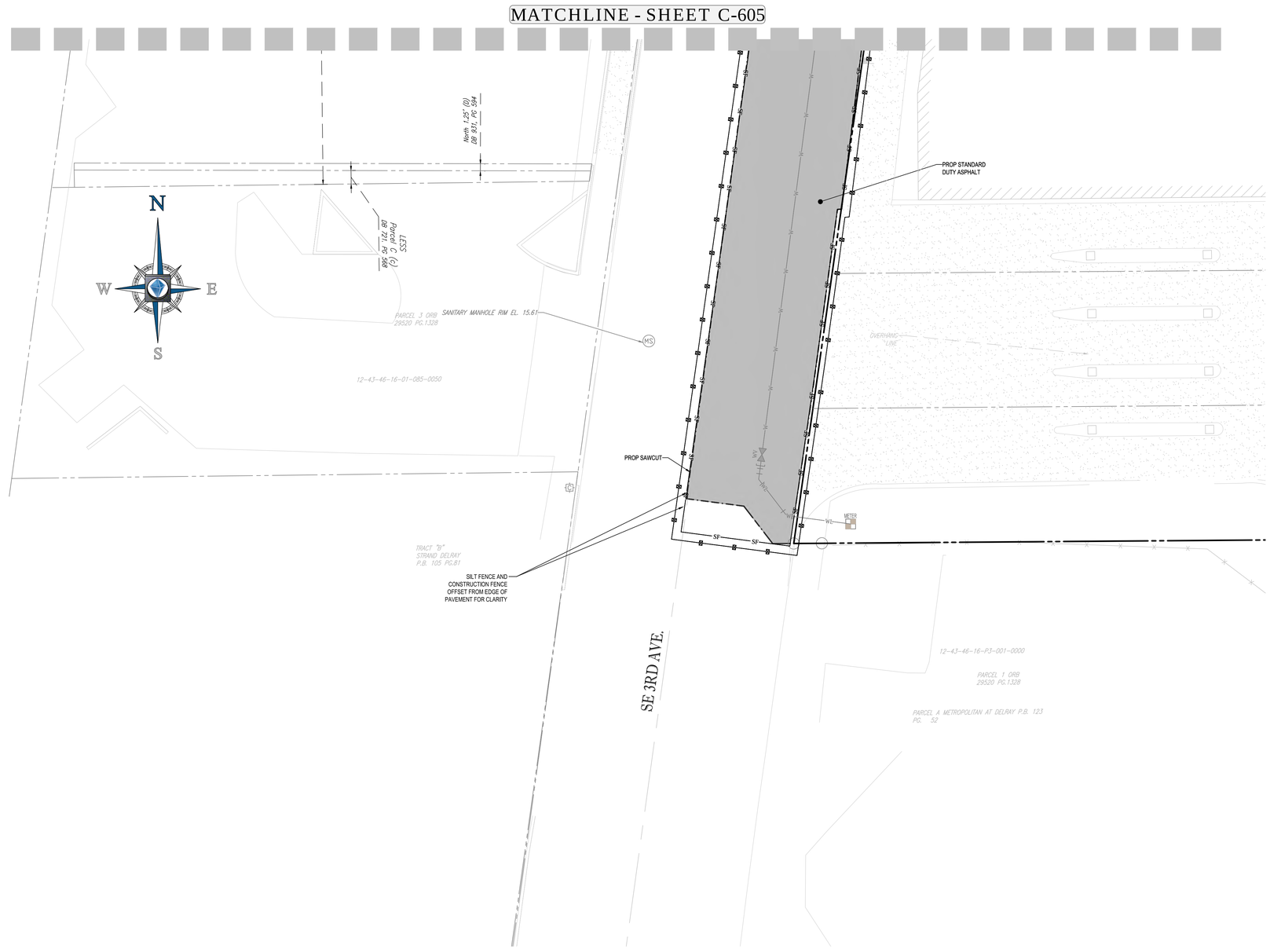

LEGEND:

- PROPERTY LINE
- EXIST. DRAINAGE STRUCTURES
- EXIST. STORM SEWER
- SF — SF — PROP SILT FENCE
- PROP CONSTRUCTION FENCE
- PROP SOIL TRACKING PREVENTION MAT
- PROP INLET PROTECTION

POLLUTION PREVENTION NOTES:

1. EROSION AND SEDIMENT CONTROL BMP'S IN ADDITION TO THOSE PRESENTED ON THESE PLANS SHALL BE IMPLEMENTED AS NECESSARY TO PREVENT TURBID DISCHARGES FROM FLOWING ONTO ADJACENT PROPERTIES OR ROADWAYS, OFF SITE STORMWATER CONVEYANCES OR RECEIVING WATERS, OR ON SITE WETLANDS AND SURFACE WATERS. BMP'S SHALL BE DESIGNED, INSTALLED, AND MAINTAINED BY THE SITE OPERATOR TO ENSURE THAT OFF SITE SURFACE WATER QUALITY REMAINS CONSISTENT WITH STATE AND LOCAL REGULATIONS. [THE OPERATOR IS THE ENTITY THAT OWNS OR OPERATES THE CONSTRUCTION ACTIVITY AND HAS AUTHORITY TO CONTROL THOSE ACTIVITIES AT THE PROJECT NECESSARY TO ENSURE COMPLIANCE.]

2. OFF SITE SURFACE WATER DISCHARGES, OR DISCHARGES TO ONSITE WETLANDS OR SURFACE WATERS WITH TURBIDITY IN EXCESS OF 29 NEPHELOMETRIC TURBIDITY UNITS (NTU'S) ABOVE BACKGROUND LEVEL SHALL BE IMMEDIATELY CORRECTED. SUCH INCIDENTS SHALL BE REPORTED TO WATER RESOURCES WITHIN 24 HOURS OF THE OCCURRENCE. THE REPORT SHALL INCLUDE THE CAUSE OF THE DISCHARGE AND CORRECTIVE ACTIONS TAKEN.

3. THE OPERATOR SHALL ENSURE THAT ADJACENT PROPERTIES ARE NOT IMPACTED BY WIND EROSION, OR EMISSIONS OF UNCONFINED PARTICULATE MATTER IN ACCORDANCE WITH RULE 62-296.320(4)(C)1, F.A.C., BY TAKING APPROPRIATE MEASURES TO STABILIZE AFFECTED AREAS.

4. FUEL AND OTHER PETROLEUM PRODUCT SPILLS THAT ENTER STORMWATER DRAINS OR WATERBODIES, OR FUEL AND OTHER PETROLEUM PRODUCT SPILLS THAT ARE IN EXCESS OF 25 GALLONS SHALL BE CONTAINED, CLEANED UP, AND IMMEDIATELY REPORTED TO WATER RESOURCES. SMALLER GROUND SURFACE SPILLS SHALL BE CLEANED UP AS SOON AS PRACTICAL.

5. IF CONTAMINATED SOIL AND/OR GROUNDWATER IS DISCOVERED DURING DEVELOPMENT OF THE SITE, ALL ACTIVITY IN THE VICINITY OF THE CONTAMINATION SHALL IMMEDIATELY CEASE, AND WATER RESOURCES SHALL BE CONTACTED.

6. PRIOR TO DEMOLITION OF EXISTING ON SITE STRUCTURES AN ASBESTOS SURVEY AND/OR ASBESTOS NOTIFICATION MAY BE REQUIRED.

7. NATIONAL POLLUTANT DISCHARGE ELIMINATION SYSTEM:
   A. NPDES CONSTRUCTION GENERIC PERMIT COVERAGE SHALL BE OBTAINED AT LEAST 48 HOURS IN ADVANCE OF CONSTRUCTION COMMENCEMENT IN ACCORDANCE WITH RULE 62-621.300(4)(a), F.A.C.
   B. A COPY OF THE CERTIFIED NPDES NOI, OR A COPY OF THE FDEP COVERAGE CONFIRMATION LETTER SHALL BE POSTED AT THE SITE IN ACCORDANCE WITH RULE 62-621.300(4)(A) PART III.C.2, F.A.C.
   C. A COPY OF THE CERTIFIED NPDES NOI, OR A COPY OF THE FDEP COVERAGE CONFIRMATION LETTER SHALL BE PROVIDED TO WATER RESOURCES IN ACCORDANCE WITH RULE 62-621.300(4)(a)PART III.D.1, F.A.C.
   D. THE SWPPP SHALL BE CERTIFIED IN ACCORDANCE WITH RULE 62-621.300(4)(a)PART V.D.6, F.A.C.
   E. A COPY OF THE SWPPP, AND COPIES OF THE INSPECTION AND MAINTENANCE RECORDS SHALL BE MAINTAINED AT THE PROJECT SITE, AND SHALL BE READILY AVAILABLE TO COUNTY OR STATE INSPECTORS.

8. THE DISCHARGE OF GROUNDWATER PRODUCED THROUGH DEWATERING, TO SURFACE WATERS, OR ANY PORTION OF THE MS4 WILL REQUIRE SEPARATE PERMITTING FROM THE FLORIDA DEPARTMENT OF ENVIRONMENTAL PROTECTION (DEP). PERMIT(S) SHALL BE OBTAINED PRIOR TO THE COMMENCEMENT OF DEWATERING.

MAINTENANCE NOTES:

N.P.D.E.S. PERMIT COMPLIANCE REQUIRES INSPECTIONS EVERY 7 CALENDAR DAYS BY A NPDES QUALIFIED INSPECTOR AND PERIODIC INSPECTIONS WITHIN 24 HOURS OF ANY RAINFALL EVENT OF 0.5 INCHES OR GREATER. THESE INSPECTIONS MAY RESULT IN RECOMMENDATIONS FOR ROUTINE MAINTENANCE OF THE SOIL EROSION CONTROL DEVICES, AS WELL AS FURTHER MAINTENANCE AS OUTLINED BELOW.

1. THROUGHOUT THE CONSTRUCTION PERIOD, ALL MUD/SILT TRACKED ONTO EXISTING FDOT ROADS FROM THE SITE DUE TO CONSTRUCTION SHALL BE IMMEDIATELY REMOVED BY THE CONTRACTOR.

2. CATCH BASIN INLET AND CONCRETE FLUME FILTERS SHALL BE MAINTAINED CLEAN AT ALL TIMES THROUGHOUT THE CONSTRUCTION PERIOD. WEEKLY INSPECTIONS WILL BE PERFORMED EVERY 7 CALENDAR DAYS. IF A FILTER HAS HOLES OR IS INUNDATED WITH SEDIMENT, THE FILTER WILL REQUIRE REPLACEMENT.

3. CONSTRUCTION ACCESS AND TRACKING MAT MUST BE MAINTAINED AS NECESSARY. REPLENISH CRUSHED AGGREGATE IF PRESENT LAYER IS FILLED WITH SEDIMENT, POOLING WATER OR HAS RUTS. A NEW LAYER MAY BE ADDED IF OLD LAYERS BECOME COMPACTED.

4. SILT FENCE IS TO BE INSPECTED DAILY BY CONTRACTOR AND EVERY 7 CALENDAR DAYS BY NPDES QUALIFIED INSPECTOR. IF REPAIRS OR REPLACEMENT IS NECESSARY, IT SHALL BE PERFORMED IMMEDIATELY. THE SILT FENCE SHOULD BE TRENCHED IN, BACK-FILLED, AND STAPLED OR STAKED ACCORDING TO THE MANUFACTURER'S SPECIFICATIONS. MAINTENANCE INCLUDES THE REMOVING OF BUILT-UP SEDIMENT. WHEN THE SEDIMENT ACCUMULATES TO 1/3 OF THE HEIGHT OF THE FENCE, CONTRACTOR MAY HAVE TO REMOVE, REPLACE, RETRENCH, OR RE-BACKFILL THE FENCE IF IT FAILS. IT WOULD ALSO BE NECESSARY TO REINSTALL IF ANY PORTION OF THE FENCING WAS DAMAGED BY CONSTRUCTION MACHINERY.

5. SEEDING OR RESEEDING MAY BE REQUIRED IMMEDIATELY TO AREAS WHICH HAVE BEEN DAMAGED BY RUNOFF.

6. REMOVE ANY VISIBLE SEDIMENT FROM THE POND BOTTOM TO KEEP THE BASIN DESIGNED INFILTRATION PERFORMANCE

7. THE CONTRACTOR SHALL CONTINUOUSLY ENSURE THAT THE PERIMETER OF THE SITE, INCLUDING CONSTRUCTION ENTRANCES, IS SECURED FROM ALLOWING DEBRIS TO LEAVE THE SITE DUE TO CONSTRUCTION ACTIVITY OR RAINFALL EVENTS. A WEEKLY LOG SHALL BE UPDATED AND KEPT ON-SITE IN ACCORDANCE WITH THE NPDES PERMIT. BY BIDDING DOCUMENTS CONTRACTOR ACKNOWLEDGES HE/SHE IS AWARE OF NPDES GUIDELINES AND POLICIES AS WELL AS BEST MANAGEMENT PRACTICES AND ASSUMES SOLE RESPONSIBILITY FOR FINES IMPOSED BY GOVERNMENTAL AGENCIES DUE TO VIOLATIONS.

10 5 2.5 0 10
1"= 10'

BOHLER ENGINEERING
SITE CIVIL AND CONSULTING ENGINEERING
LAND SURVEYING
PROGRAM MANAGEMENT
LANDSCAPE ARCHITECTURE
SUSTAINABLE DESIGN
PERMITTING SERVICES
TRANSPORTATION SERVICES

THE INFORMATION, DESIGN AND CONTENT OF THIS PLAN ARE PROPRIETARY AND SHALL NOT BE COPIED OR USED FOR ANY PURPOSE WITHOUT PRIOR WRITTEN AUTHORIZATION FROM BOHLER ENGINEERING. ONLY THE PLANS IN WHICH THE SEAL OF A PROFESSIONAL ENGINEER APPEARS SHALL BE UTILIZED FOR CONSTRUCTION PURPOSES

REVISIONS

REV	DATE	COMMENT	DRAWN BY / CHECKED BY
1	2019-08-23	CITY OF DELRAY BEACH COMMENTS	LJL / AS
2	2019-09-10	SPRAB COMMENTS	LJL / AS

THIS DRAWING IS INTENDED FOR MUNICIPAL AND/OR AGENCY REVIEW AND APPROVAL. IT IS NOT INTENDED AS A CONSTRUCTION DOCUMENT UNLESS INDICATED OTHERWISE.

811 Know what's below. Call before you dig.
ALWAYS CALL 811
It's fast. It's free. It's the law.

ISSUED FOR MUNICIPAL & AGENCY REVIEW & APPROVAL

PROJECT No.:	FLB180120
DRAWN BY:	LJL
CHECKED BY:	AS
DATE:	2019-10-25
CAD I.D.:	FLB180120-OBP-1

PROJECT:
PIERRE DELRAY PHASE I - SPRAB SITE PLAN PACKAGE (AKA SUNTRUST BUILDING)

FOR

CLIENT
ZYSCOVICH ARCHITECTS

PROPOSED DEVELOPMENT
302 E ATLANTIC AVE
PALM BEACH COUNTY
DELRAY BEACH, FL

BOHLER ENGINEERING
2255 GLADES ROAD, SUITE 305E
BOCA RATON, FLORIDA 33431
Phone: (561) 571-0280
Fax: (561) 571-0281
FLORIDA BUSINESS CERT. OF AUTH. No. 30780
LANDSCAPE ARCHITECT BUSINESS LIC. NO. LC26000551

SHEET TITLE:
EROSION AND SEDIMENTATION CONTROL PLANS PHASE II

SHEET NUMBER:
C-606

REVISION 2 - 2019-09-10

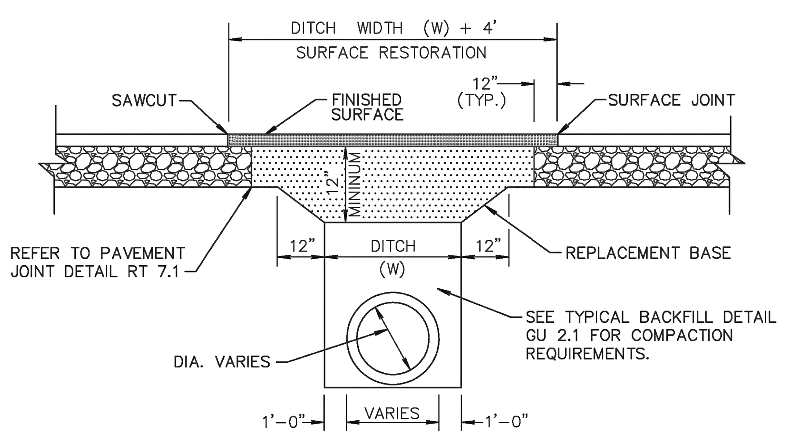

1. REPLACEMENT BASE TO BE AT MIN. 12" THICK.

2a. BASE MATERIAL SHALL BE PLACED IN TWO LIFTS AND EACH LIFT COMPACTED TO 98% MAXIMUM DENSITY PER AASHTO T-180 (MAX. LIFT THICKNESS = 6").

2b. 12" EXCAVATABLE FLOWABLE FILL MIN. 100 P.S.I. MAY BE USED IN LIEU OF 12" BASE.

3. ASPHALT CONCRETE PAVEMENT JOINTS SHALL BE MECHANICALLY SAWED.

4. ALL DISTURBED PAVEMENT MARKINGS SHALL BE RESTORED IN ACCORDANCE WITH CITY STANDARDS.

5. SURFACE MATERIAL SHALL BE F.D.O.T. TYPE S-I OR S-III ASPHALTIC CONC. (MIN. THICKNESS 1 1/2").

6. ANY PAVT. CUTS SHALL BE COLD PATCHED AT END OF EACH WORKING DAY TO FACILITATE UNHINDERED TRAFFIC FLOW.

CITY of DELRAY BEACH
ENVIRONMENTAL SERVICES DEPARTMENT
434 SOUTH SWINTON AVENUE, DELRAY BEACH, FLORIDA 33444

PAVEMENT REPAIR DETAIL — DATE: 02-13-2008 — GU 1.1

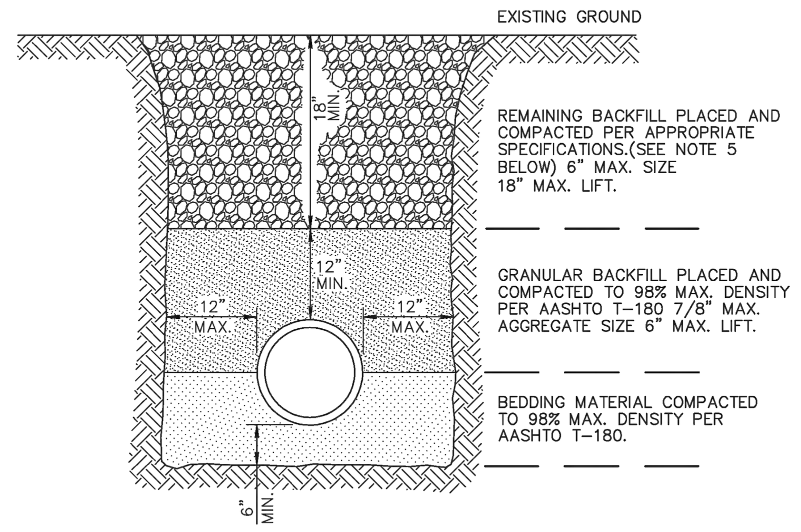

NOTES:

1. UNSUITABLE IN-SITU MATERIALS SUCH AS MUCK, DEBRIS AND LARGE ROCKS SHALL BE REMOVED; BEDDING MATERIAL AND BACKFILL CONSISTING OF WASHED AND GRADED LIMEROCK 3/8" -7/8" SIZING.
2. THE PIPE AND/OR STRUCTURE SHALL BE FULLY SUPPORTED FOR ITS ENTIRE LENGTH WITH APPROPRIATE COMPACTION UNDER THE PIPE HAUNCHES.
3. THE PIPE AND/OR STRUCTURE SHALL BE PLACED IN A DRY TRENCH.
4. BACKFILL SHALL BE FREE OF UNSUITABLE MATERIAL SUCH AS LARGE ROCK, MUCK, AND DEBRIS.
5. COMPACT BACKFILL TO 98% DENSITY UNDER PAVEMENT AND TO 95% DENSITY ELSEWHERE.(AASHTO T-180)
6. COMPACTION AND DENSITY TESTS SHALL BE COMPLETED DURING BACKFILL OPERATIONS, CONTRACTORS NOT FOLLOWING THIS PROCEDURE, FOR WHATEVER REASONS, SHALL BE REQUIRED TO RE-EXCAVATE THE AREA IN QUESTION, DOWN TO THE BEDDING MATERIAL, THEN BACKFILL FOLLOWING THE ABOVE PROCEDURES.

CITY of DELRAY BEACH
ENVIRONMENTAL SERVICES DEPARTMENT
434 SOUTH SWINTON AVENUE, DELRAY BEACH, FLORIDA 33444

TYPICAL BACKFILL DETAIL — DATE: 06-05-08 — GU 2.1

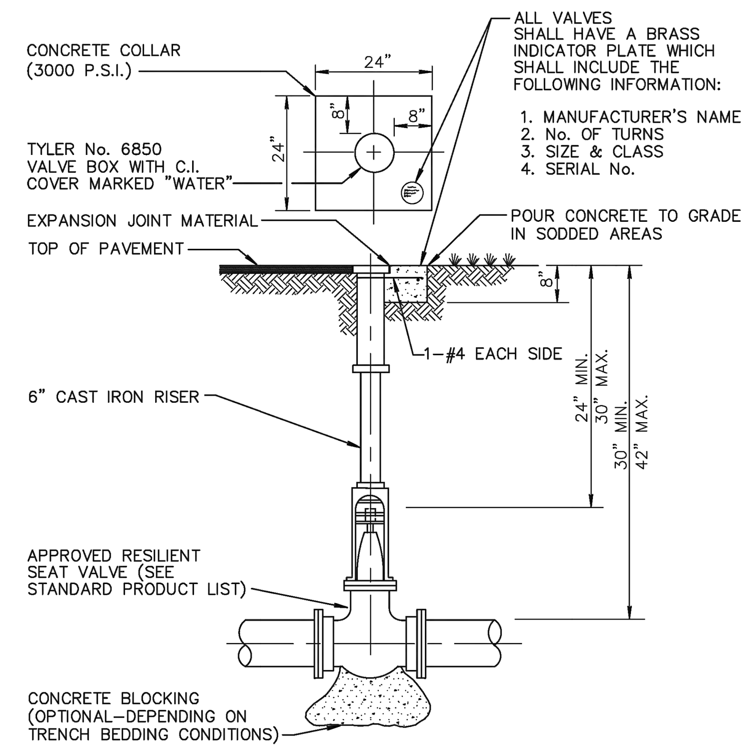

NOTES:

1. WHEN VALVE IS DEEPER THAN 30" AN EXTENSION WITH UNIVERSAL JOINT SHALL BE REQUIRED TO BRING OPERATING NUT 24"-30" BELOW FINISHED GRADE EXTENSION BOLTS & NUTS SHALL BE 316 STAINLESS STEEL. A 316 STAINLESS STEEL CENTERING PLATE SHALL ALSO BE REQUIRED.
2. AT DEAD END OR WHERE MAIN LINES CHANGE DIRECTION, VALVES SHALL BE RESTRAINED USING MECHANICAL JOINT RESTRAINTS, TIERODS, OR OTHER APPROVED RESTRAINT.

CITY of DELRAY BEACH
ENVIRONMENTAL SERVICES DEPARTMENT
434 SOUTH SWINTON AVENUE, DELRAY BEACH, FLORIDA 33444

TYPICAL GATE VALVE DETAIL 4" THRU 12" — DATE: 06-27-14 — PW 3.1

ITEM	BOX COMPLETE EXTENSION IN INCHES	WT.	TOP SECTION W/LID LENGTH	TOP SECTION W/LID WT.	BOTTOM LENGTH	BOTTOM WT.	PIECES PER PKG.
461-S	19-22	60	10	35	15	25	..
462-S	27-32	70	10	35	24	35	..
562-S	27-37	80	16	45	24	35	20
563-S	33-43	85	16	45	30	40	20
564-S	39-50	90	16	45	36	45	20
662-S	36-52	105	26	65	30	40	20
664-S	39-60	110	26	65	36	45	20
666-S	51-71	135	26	65	**48	70	20
668-S	62-82	145	26	65	**60	80	20

**MAY BE FURNISHED IN TWO PIECES SCREWED TOGETHER TO MAKE THE LENGTH REQUIRED.

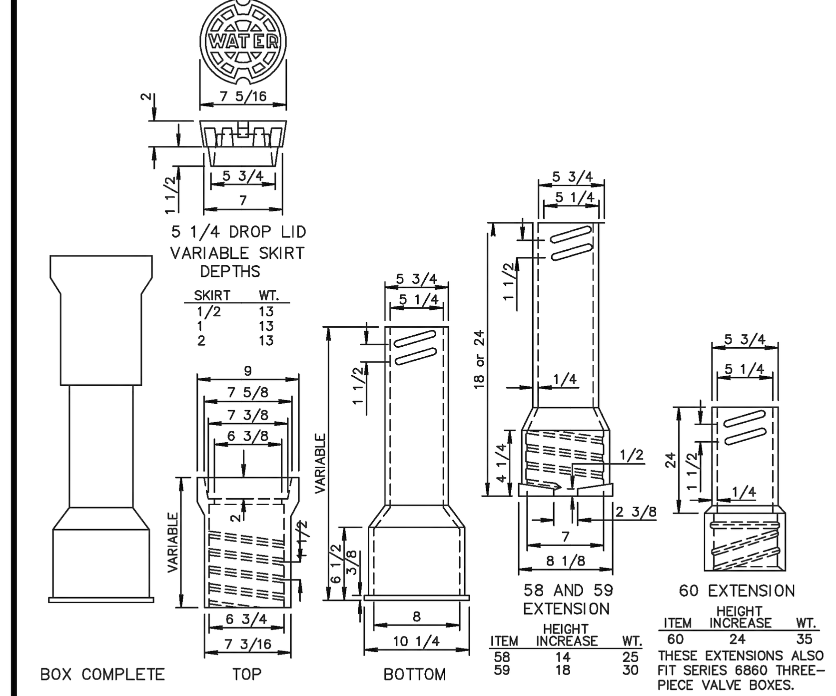

NOTE: LOCKING LIDS WILL NOT BE ACCEPTED.

CITY of DELRAY BEACH
ENVIRONMENTAL SERVICES DEPARTMENT
434 SOUTH SWINTON AVENUE, DELRAY BEACH, FLORIDA 33444

CAST IRON VALVE BOXES, TWO PIECE — DATE: 02-28-08 — PW 3.2

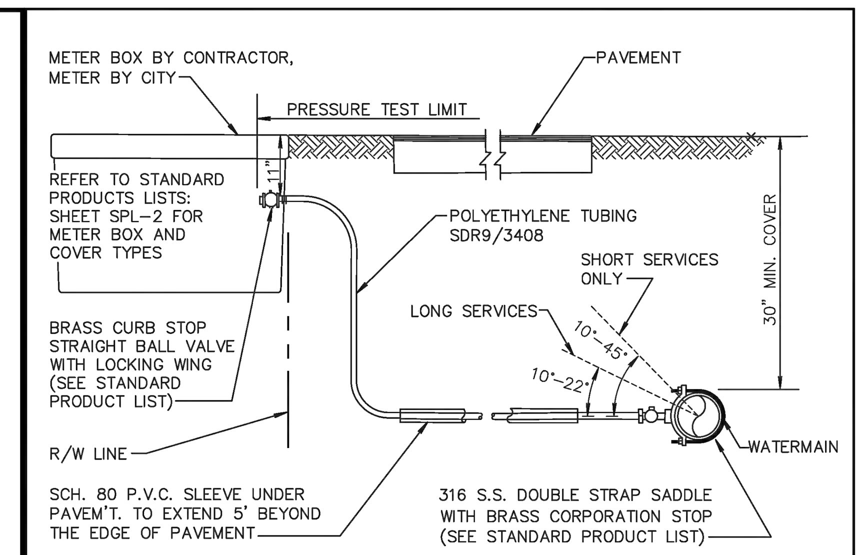

NOTES:

1. SUCCESSIVE TAPS INTO THE WATER MAIN SHALL BE SPACED A MINIMUM OF 18" ON CENTER.
2. SERVICE LINES SHALL NOT BE PLACED UNDER DRIVEWAYS.
3. ALL METERS REQUIRE A LOCKING BRASS CURB STOP WITH LOCK WING (1"MIN.).
4. NO FITTINGS BETWEEN CORPORATION STOP AND BRANCH ASSEMBLY.
5. MAXIMUM SERVICE LENGTH IS 100' TO METER.
6. CASING PIPE I.D. SHALL BE SERVICE O.D. PLUS 1" MINIMUM.
7. MINIMUM BEND RADIUS ON SERVICES SHALL BE 14" ON ALL SERVICES BEHIND METER.
8. METER SIZE WILL BE DETERMINED BY PUBLIC UTILITIES DEPT. UPON APPLICATION FOR SERVICE.
9. ALL VALVES TO BE BALL VALVES.
10. METER BOX SHALL BE PROVIDED AND INSTALLED BY CONTRACTOR.
11. ALL SERVICES UNDER ROADWAYS ARE TO BE INSTALLED BY TRENCHLESS METHOD, UNLESS OTHERWISE APPROVED.
12. ALL EXISTING SERVICES TO BE FIELD VERIFIED BY BUILDER/CONTRACTOR/DEVELOPER; IF EXISTING SERVICE IS GALVANIZED, BUILDER/CONTRACTOR/DEVELOPER SHALL REPLACE WITH POLYETHYLENE PIPING FROM MAIN TO THE METER.

CITY of DELRAY BEACH
ENVIRONMENTAL SERVICES DEPARTMENT
434 SOUTH SWINTON AVENUE, DELRAY BEACH, FLORIDA 33444

TYPICAL SERVICE CONNECTION — DATE: 11-19-2015 — PW 9.1a

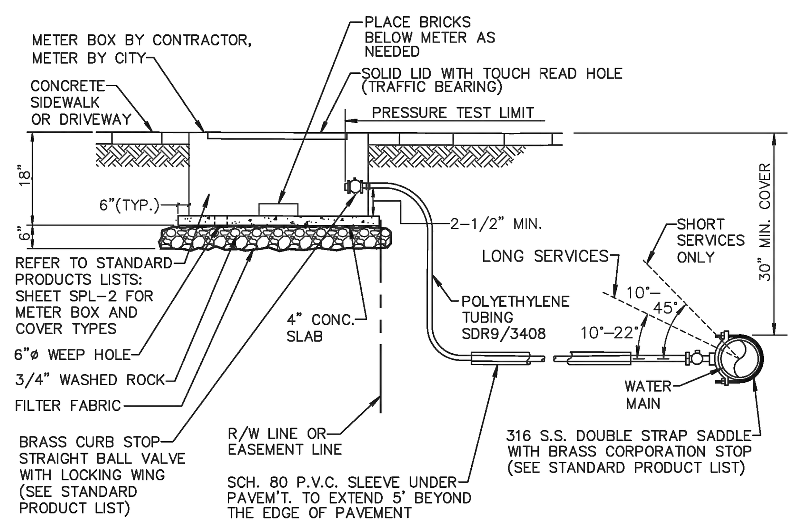

NOTES:

1. SUCCESSIVE TAPS INTO THE WATER MAIN SHALL BE SPACED A MINIMUM OF 18" ON CENTER.
2. ALL METERS REQUIRE A LOCKING BRASS CURB STOP WITH LOCK WING (1"MIN.).
3. NO FITTINGS BETWEEN CORPORATION STOP AND BRANCH ASSEMBLY.
4. MAXIMUM SERVICE LENGTH IS 100' TO METER.
5. CASING PIPE I.D. SHALL BE SERVICE O.D. PLUS 1" MINIMUM.
6. MINIMUM BEND RADIUS ON SERVICES SHALL BE 14" ON ALL SERVICES BEHIND METER.
7. METER SIZE WILL BE DETERMINED BY PUBLIC UTILITIES DEPT. UPON APPLICATION FOR SERVICE.
8. ALL VALVES TO BE BALL VALVES.
9. METER BOX SHALL BE PROVIDED AND INSTALLED BY CONTRACTOR.
10. ALL SERVICES UNDER ROADWAYS ARE TO BE INSTALLED BY TRENCHLESS METHOD, UNLESS OTHERWISE APPROVED.
11. ALL EXISTING SERVICES TO BE FIELD VERIFIED BY BUILDER/CONTRACTOR/DEVELOPER; IF EXISTING SERVICE IS GALVANIZED, BUILDER/CONTRACTOR/DEVELOPER SHALL REPLACE WITH POLYETHYLENE PIPING FROM MAIN TO METER.

CITY of DELRAY BEACH
ENVIRONMENTAL SERVICES DEPARTMENT
434 SOUTH SWINTON AVENUE, DELRAY BEACH, FLORIDA 33444

TYPICAL URBAN/REDEVELOPMENT AREA SERVICE CONNECTION IN DRIVEWAYS OR SIDEWALKS — DATE: 11-19-2015 — PW 9.1b

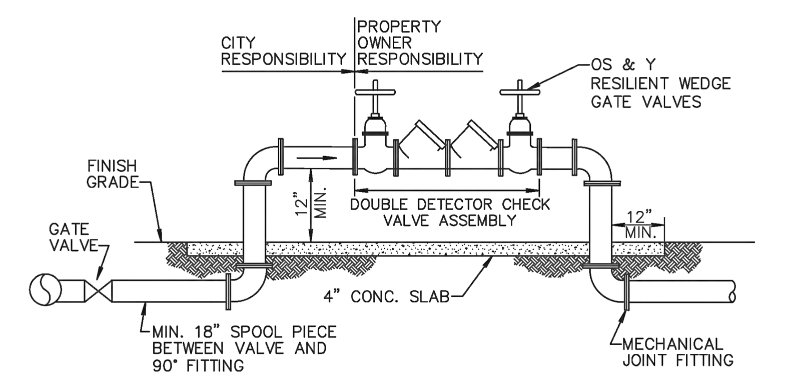

NOTES:

1. FOR ALL SERVICES GREATER THAN 2" DIA.
2. ALL PIPE AND FITTINGS SHALL BE CLASS 52 DUCTILE IRON CEMENT LINED WITH CEMENT LINED DUCTILE IRON FLANGE FITTINGS FOR ABOVE GROUND USE. MECHANICAL JOINT SHALL BE USED UNDERGROUND IN ACCORDANCE WITH AWWA STANDARDS.
3. THE DOUBLE DETECTOR CHECK VALVE ASSEMBLY SHALL MEET AWWA M14 AND AWWA C511-89, AND APPROVAL OF ENVIRONMENTAL SERVICES DEPARTMENT.
4. CERTIFICATION OF PROPER INSTALLATION AND OPERATION WILL BE REQUIRED FROM A CERTIFIED BACKFLOW PREVENTION TECHNICIAN PRIOR TO WATER MAIN ACCEPTANCE BY THE CITY OF DELRAY BEACH.
5. THE PROPERTY OWNER SHALL BE RESPONSIBLE FOR THE PROPER OPERATION, MAINTENANCE AND TESTING OF THE DOUBLE DETECTOR CHECK VALVE ASSEMBLY.
6. BOLLARDS TO BE USED IF THE ASSEMBLY IS WITHIN 5' OF THE PAVEMENT, REFER TO BOLLARD DETAIL PW 5.2.
7. ALL TWO INCH DOUBLE DETECTOR CHECK VALVE, SHALL BE BRASS OR TYPE "L" COPPER TUBING
8. USE OF OTHER PIPE MATERAILS WITH APPROVAL OF WATER SEWER MANAGER.
9. CITY MAINTAINS UP TO THE FIRST O S & Y VALVE.

CITY of DELRAY BEACH
ENVIRONMENTAL SERVICES DEPARTMENT
434 SOUTH SWINTON AVENUE, DELRAY BEACH, FLORIDA 33444

DOUBLE DETECTOR CHECK VALVE — DATE: 12-16-2015 — PW 10.1

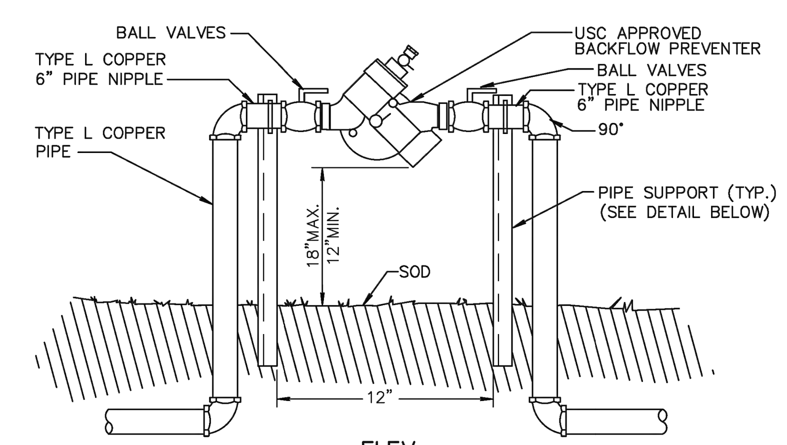

ELEV.

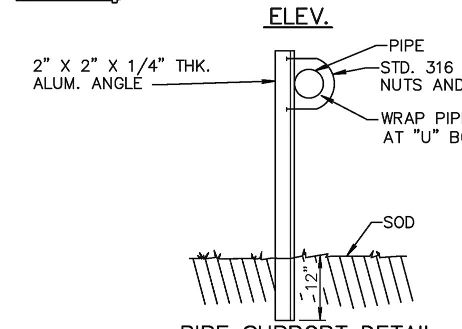

PIPE SUPPORT DETAIL

NOTES:

1. FOR ALL SERVICES LESS THAN OR EQUAL TO 2" DIA.
2. ABOVE GRADE PIPING SHALL BE BRASS OR TYPE "L" COPPER TUBING.
3. ALL COPPER JOINTS SHALL BE MADE WITH 95/5 SOLDER.
4. RPZ BACKFLOW PREVENTER IS REQUIRED IN ACCORDANCE WITH CITY OF DELRAY BEACH CODE OF ORDINANCES TITLE V, CHAPTER 52.80.
5. USE OF OTHER PIPE MATERIALS WITH APPROVAL OF DEPUTY DIRECTOR OF UTILITIES.
4. RPZ BACKFLOW PREVENTER IS REQUIRED FOR ALL COMMERCIAL PROPERTIES AND ALL RESIDENTAL PROPERTIES WITH FIRE SPRINKLER SYSTEMS.

CITY of DELRAY BEACH
ENVIRONMENTAL SERVICES DEPARTMENT
434 SOUTH SWINTON AVENUE, DELRAY BEACH, FLORIDA 33444

REDUCED PRESSURE ZONE BACKFLOW PREVENTER — DATE: 06-27-2014 — PW 10.2

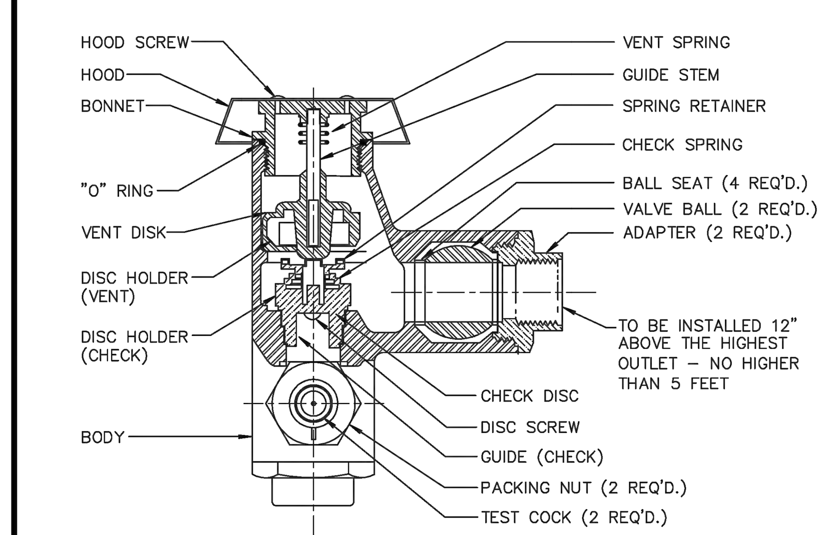

TYPICAL IRRIGATION SYSTEM ANTI-SIPHON PRESSURE TYPE VACUUM BREAKER

NOTES:

1. WATTS REGULATOR COMPANY OR EQUIVALENT.
2. VALVE SHALL MEET OR EXCEED THE A.S.S.E., BS&A AND U.S.C.F. REQUIREMENTS.
3. SHALL ALSO BE LISTED BY IAPMO (UPC).
4. USE OF OTHER PIPE MATERIALS WITH APPROVAL OF DEPUTY DIR. OF UTILITIES.
5. ABOVE GRADE PIPING SHALL BE PVC OR COPPER.

CITY of DELRAY BEACH
ENVIRONMENTAL SERVICES DEPARTMENT
434 SOUTH SWINTON AVENUE, DELRAY BEACH, FLORIDA 33444

ANTI-SIPHON PRESSURE TYPE VACUUM BREAKER — DATE: 01-18-2006 — PW 10.3

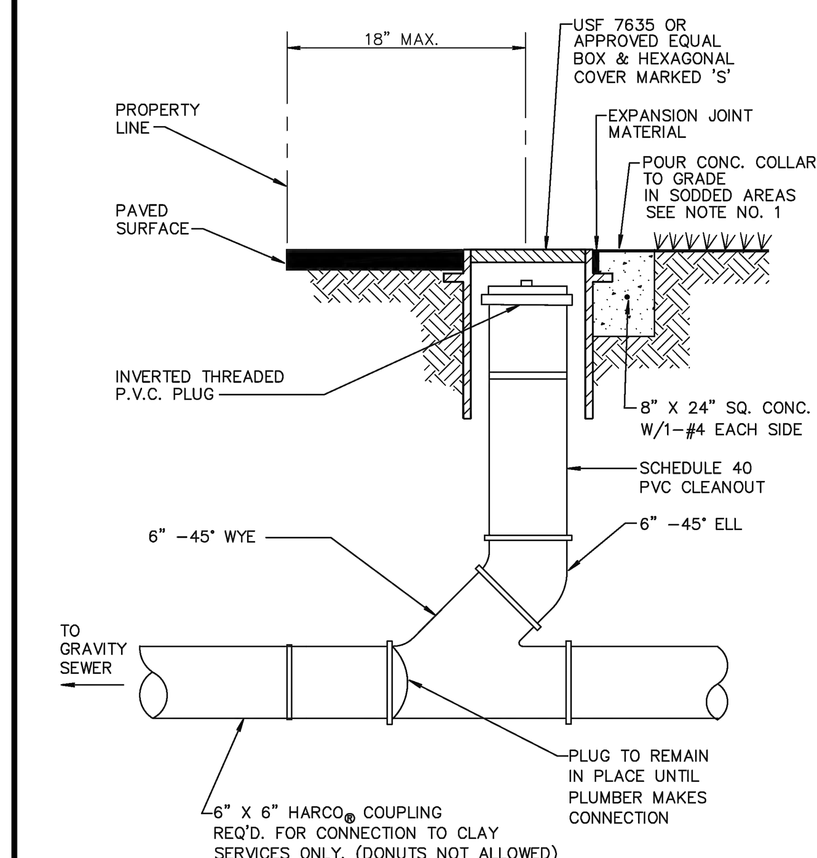

NOTE:

1. INVERTED BRASS CAP SHALL BE USED IN GRASS AREAS IN LIEU OF CASTING AND CONE COLLAR.
2. MINIMUM DEPTH OF SERVICE LATERAL SHALL BE 3 FEET.

CITY of DELRAY BEACH
ENVIRONMENTAL SERVICES DEPARTMENT
434 SOUTH SWINTON AVENUE, DELRAY BEACH, FLORIDA 33444

TYPICAL COMMERCIAL CLEANOUT — DATE: 06-27-2014 — WW 5.2

PRESSURE PIPE NOTES:

1. THERE SHALL BE 30" MINIMUM COVER FROM FINISHED GRADE TO TOP OF PIPE. FOR PIPE SIZE 10" AND LARGER THERE SHALL BE 36" MINIMUM COVER.

2.a. DUCTILE IRON PIPE (DIP) FOR FORCE MAINS SHALL BE CLASS 350 EPOXY LINED IN ACCORDANCE WITH AWWA C550.

2.b. DUCTILE IRON PIPE (DIP) FOR WATER MAINS SHALL BE CLASS 350 IN ACCORDANCE WITH AWWA C151 (ANSI A21.51), AND SHALL HAVE AN INTERNAL LINING OF CEMENT MORTAR IN ACCORDANCE WITH AWWA C104/ A21.4.

3. C-900 PVC PRESSURE PIPE MAY BE USED IN LIEU OF DIP WATER MAIN METAL TAPE ABOVE C-900

4. ALL FITTINGS SHALL BE CLASS 350 DUCTILE IRON WITH MECHANICAL JOINTS AND EPOXY LINING.

5. WATER MAIN AND SEWAGE FORCE MAIN VALVES 12 INCHES AND SMALLER SHALL BE RESILIENT WEDGE GATE VALVES IN ACCORDANCE WITH AWWA C509. WATER MAIN VALVES LARGER THAN 12 INCHES SHALL BE BUTTERFLY VALVES IN ACCORDANCE WITH AWWA C504. SEWAGE FORCE MAIN VALVES LARGER THAN 12 INCHES SHALL BE RESILIENT WEDGE GATE VALVES IN ACCORDANCE WITH AWWA C515

6. ALL TRENCHING, PIPE-LAYING, BACKFILL, PRESSURE TESTING, AND DISINFECTION MUST COMPLY WITH CITY AND HEALTH DEPARTMENT STANDARDS.

7. WATER AND FORCE MAINS SHALL BE PIGGED, AS WELL AS, PRESSURE TESTED FOR A PERIOD OF NOT LESS THAN TWO HOURS AT 150 PSI IN ACCORDANCE WITH ANSI/AWWA C600 LATEST STANDARDS. ALLOWABLE LEAKAGE SHALL BE DETERMINED AS FOLLOWS:

$$L = \frac{(S)(D)(P)^{0.50}}{148{,}000} X(.50)$$

WHERE:

L = ALLOWABLE LEAKAGE (GALLONS PER HOUR)
S = PIPE LENGTH (FEET)
D = NOMINAL DIAMETER OF PIPE (INCHES)
P = AVERAGE TEST PRESSURE (PSI)

8. RESTRAINTS SHALL BE PROVIDED AT ALL FITTINGS AS SHOWN ON PP2.1

9. PRIOR TO ANY TESTING UNDER FUTURE PAVEMENT, ROCK SHALL BE FINISHED & PRIMED OR 1ST LIFT OF ASPHALT PLACED.

10. PIG SIZE SHALL BE PIPE DIA. PLUS 2" OR NEXT LARGER DIA.

11. NO PROPOSED STRUCTURES SHALL BE INSTALLED WITHIN A HORIZONTAL DISTANCE OF 10-FEET FROM ANY EXISTING OR PROPOSED WATER MAINS, OR FORCE MAINS.

12. LINE STOPS SHALL BE INSTALLED A MINIMUM OF 3 PIPE LENGHTS FROM LOCATION OF PIPE REMOVED, OTHERWISE, PROVIDE NECESSARY JOINT RESTRAINTS.

CITY of DELRAY BEACH
ENVIRONMENTAL SERVICES DEPARTMENT
434 SOUTH SWINTON AVENUE, DELRAY BEACH, FLORIDA 33444

PRESSURE PIPE NOTES — DATE: 06-27-2014 — PP 1.1

MINIMUM LENGTHS OF PIPE (FT) TO BE RESTRAINED

FITTING TYPE		PIPE SIZE 4"	6"	8"	10"	12"	16"	20"	24"
90° HORIZ. BEND		14	20	25	30	35	45	54	62
45° HORIZ. BEND		6	8	11	13	15	19	22	26
22.5° HORIZ. BEND		3	4	5	6	7	9	11	12
11.25° HORIZ. BEND		1	2	3	3	4	4	5	6
90° VERT. OFFSET	UPPER BEND	55	79	103	125	147	189	228	266
	LOWER BEND	22	38	49	59	69	88	106	123
45° VERT. OFFSET	UPPER BEND	22	32	42	51	60	77	93	109
	LOWER BEND	10	14	19	23	28	35	43	50
22.5° VERT. OFFSET	UPPER BEND	7	12	17	21	26	34	42	49
	LOWER BEND	2	4	6	8	10	14	17	21
11.25° VERT. OFFSET	UPPER BEND	3	4	6	9	11	15	19	22
	LOWER BEND	1	1	1	2	3	5	7	8
PLUG (DEAD END)		32	45	59	70	83	107	129	151
INLINE VALVE		32	45	59	70	83	107	129	151
TEE (BRANCH RESTRAINT)	4"X0	23							
	6"X0	21	35						
	8"X0	18	34	47					
	10"X0	16	32	46	58				
	12"X0	13	30	44	57	69			
	16"X0	7	26	41	55	67	90		
	20"X0	1	21	38	52	65	88	109	
	24"X0	1	16	34	49	62	86	108	129
REDUCER (LARGER PIPE RESTRAINT)	6"X0	23							
	8"X0	38	25						
	10"X0	57	43	24					
	12"X0	72	60	44	41				
	16"X0	99	90	78	75	45			
	20"X0	123	116	107	105	81	45		
	24"X0	146	140	132	131	111	82	45	

RESTRAIN PIPE ONE BELL PAST MINIMUM DISTANCE

CITY of DELRAY BEACH
ENVIRONMENTAL SERVICES DEPARTMENT
434 SOUTH SWINTON AVENUE, DELRAY BEACH, FLORIDA 33444

PIPE RESTRAINT TABLE FOR PRESSURE PIPE (SHEET 1 OF 2) — DATE: 08-01-2011 — PP 2.1a

NOTES:

1. THE DATA IN THE PREVIOUS TABLE ARE BASED UPON THE FOLLOWING INSTALLATION CONDITIONS:
   - SOIL TYPE ....SAND
   - TEST PRESSURE ....150 PSI, 200 PSI FOR PIPES LARGER THAN 24"
   - DEPTH OF BURY ....3'
   - TRENCH TYPE 3
   - SAFETY FACTOR 1.5
   - VERTICAL OFF-SET ....3'
   - MINIMUM PIPE LENGTHS ALONG TEE RUN ....5'
2. THE RESTRAINED PIPE LENGTHS APPLY TO DUCTILE IRON PIPE AND PVC PIPE.
3. ALL JOINTS BETWEEN UPPER AND LOWER BENDS SHALL BE RESTRAINED.
4. RESTRAINED PIPE LENGTHS FOR VALVES APPLY TO PIPE ON BOTH SIDES OF VALVES
5. THE PREVIOUS TABLE SHALL SERVCE AS A GENERAL DESIGN GUIDE ONLY. IT IS THE ENGINEER OF RECORD'S RESPONSIBILITY TO JUSTIFY AND DOCUMENT ANY DEVIATIONS FROM THE PIPE LENGTHS SPECIFIED IN THE PREVIOUS TABLE.
6. SOURCES: EBAA IRON RESTRAINT LENGTH CALCULATION PROGRAM FOR PVC PIPE, RELEASE 3.1 AND DIPRA THRUST RESTRAINT FOR DUCTILE IRON PIPE, RELEASE 3.2.
7. RESTRAIND JOINTS SHALL EXTEND ONE JOINT BEYOND MIN. LENGTH REQUIRED.

CITY of DELRAY BEACH
ENVIRONMENTAL SERVICES DEPARTMENT
434 SOUTH SWINTON AVENUE, DELRAY BEACH, FLORIDA 33444

PIPE RESTRAINT TABLE FOR PRESSURE PIPE (SHEET 2 OF 2) — DATE: 08-01-2011 — PP 2.1b

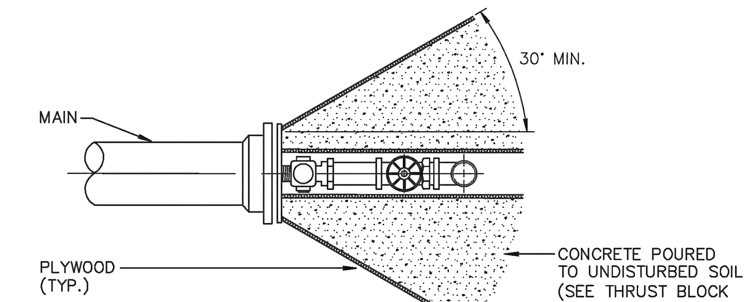

PLAN

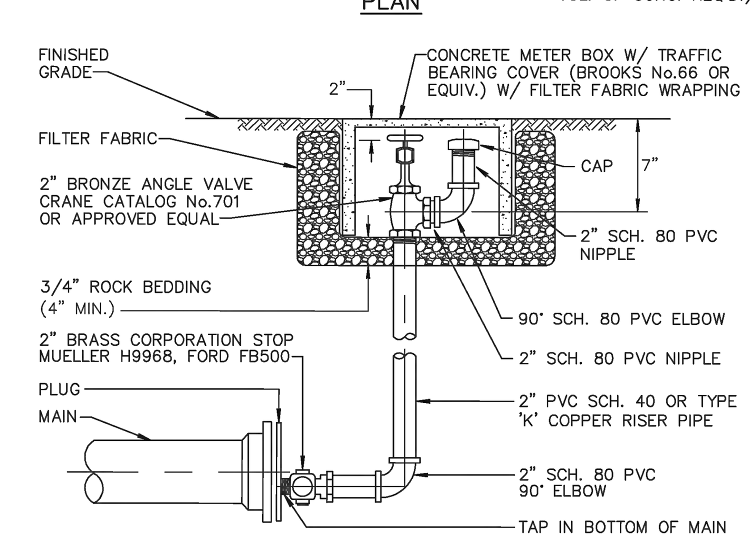

ELEV.

NOTES:

1. GALVANIZED PIPING AND FITTINGS SHALL NOT BE USED.
2. JOINT RESTRIANTS TO BE INSTALLED MIN. TWO JOINTS BEFORE DEAD END.
3. HYDRO-GUARD IS TO BE USED AT ALL PERMANENT DEAD ENDS. (SEE 6.2b)

CITY of DELRAY BEACH
ENVIRONMENTAL SERVICES DEPARTMENT
434 SOUTH SWINTON AVENUE, DELRAY BEACH, FLORIDA 33444

TYPICAL 2" TERMINAL BLOW-OFF FOR TEMPORARY DEAD ENDS — DATE: 01-18-2006 — PW 6.1a

2

BOHLER ENGINEERING

SITE CIVIL AND CONSULTING ENGINEERING
LAND SURVEYING
PROGRAM MANAGEMENT
LANDSCAPE ARCHITECTURE
SUSTAINABLE DESIGN
PERMITTING SERVICES
TRANSPORTATION SERVICES

THE INFORMATION, DESIGN AND CONTENT OF THIS PLAN ARE PROPRIETARY AND SHALL NOT BE COPIED OR USED FOR ANY PURPOSE WITHOUT PRIOR WRITTEN AUTHORIZATION FROM BOHLER ENGINEERING. ONLY APPROVED, SIGNED AND SEALED PLANS SHALL BE UTILIZED FOR CONSTRUCTION PURPOSES. © BOHLER ENGINEERING

REVISIONS

REV	DATE	COMMENT	DRAWN BY / CHECKED BY
1	2019-08-23	CITY OF DELRAY BEACH COMMENTS	LJL / AS
2	2019-09-10	SPRAB COMMENTS	LJL / AS

THIS DRAWING IS INTENDED FOR MUNICIPAL AND/OR AGENCY REVIEW AND APPROVAL. IT IS NOT INTENDED AS A CONSTRUCTION DOCUMENT UNLESS INDICATED OTHERWISE.

811 Know what's below. Call before you dig.
ALWAYS CALL 811
It's fast. It's free. It's the law.

ISSUED FOR MUNICIPAL & AGENCY REVIEW & APPROVAL

PROJECT No.: FLB180120
DRAWN BY: LJL
CHECKED BY: AS
DATE: 2019-10-25
CAD I.D.: FLB180120-SDP-1

PROJECT:

PIERRE DELRAY PHASE 1 - SPRAB SITE PLAN PACKAGE (AKA SUNTRUST BUILDING)

FOR

CLIENT

ZYSCOVICH ARCHITECTS

PROPOSED DEVELOPMENT

302 E ATLANTIC AVE
PALM BEACH COUNTY
DELRAY BEACH, FL

BOHLER ENGINEERING
2255 GLADES ROAD, SUITE 305E
BOCA RATON, FLORIDA 33431
Phone: (561) 571-0280
Fax: (561) 571-0281
FLORIDA BUSINESS CERT. OF AUTH. No. 30780
LANDSCAPE ARCHITECT BUSINESS LIC. No LC26000551

SHEET TITLE:

DETAILS

SHEET NUMBER:

C-901

REVISION 2 - 2019-09-10

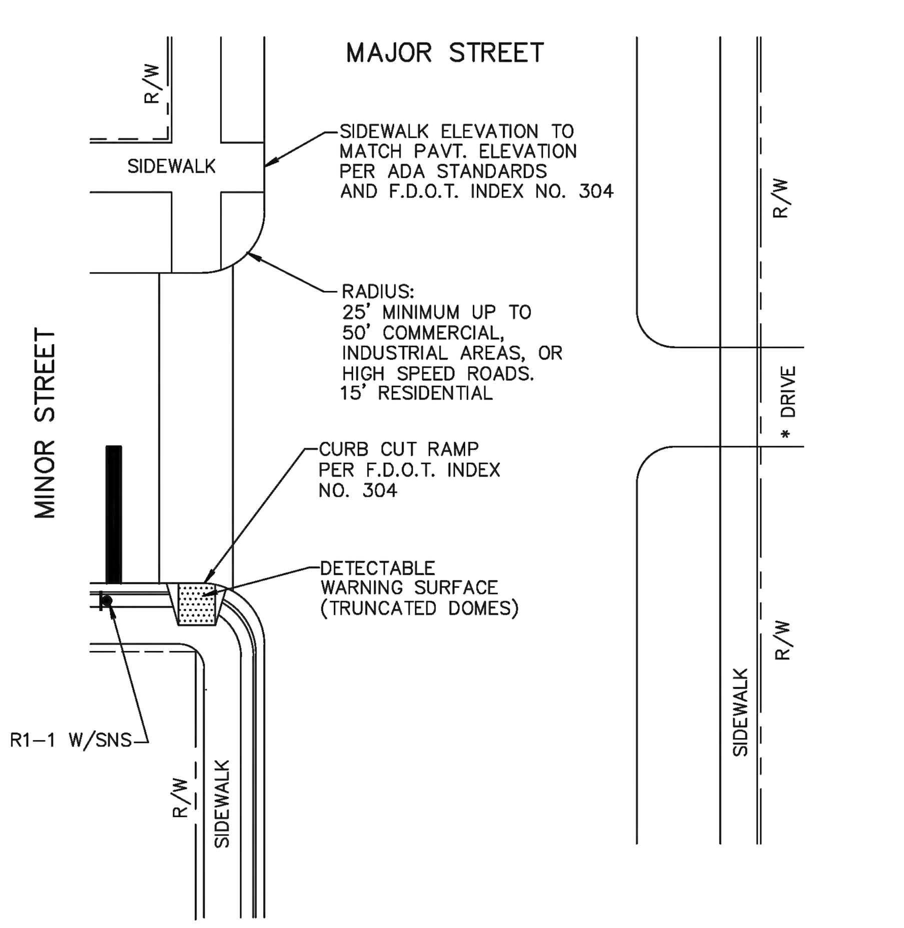

* DRIVEWAY DESIGN TO BE PER CITY LAND DEVELOPMENT REGULATIONS, FDOT STANDARD SPECIFICATIONS. ALL DESIGNS SUBJECT TO CITY ENGINEER APPROVAL.

* ALL WALKS CROSSING A VEHICULAR AREA SHALL HAVE A DETECTABLE WARNING SURFACE (TRUNCATED DOME) IN ACCORDANCE WITH THE FLORIDA BUILDING CODE, CHAPTER II, FL. ACCESSIBILITY CODE FOR BUILDING CONSTRUCTION.

CITY of DELRAY BEACH — ENVIRONMENTAL SERVICES DEPARTMENT — 434 SOUTH SWINTON AVENUE, DELRAY BEACH, FLORIDA 33444 | INTERSECTION DETAIL | DATE: 07-02-2014 | RT 3.1

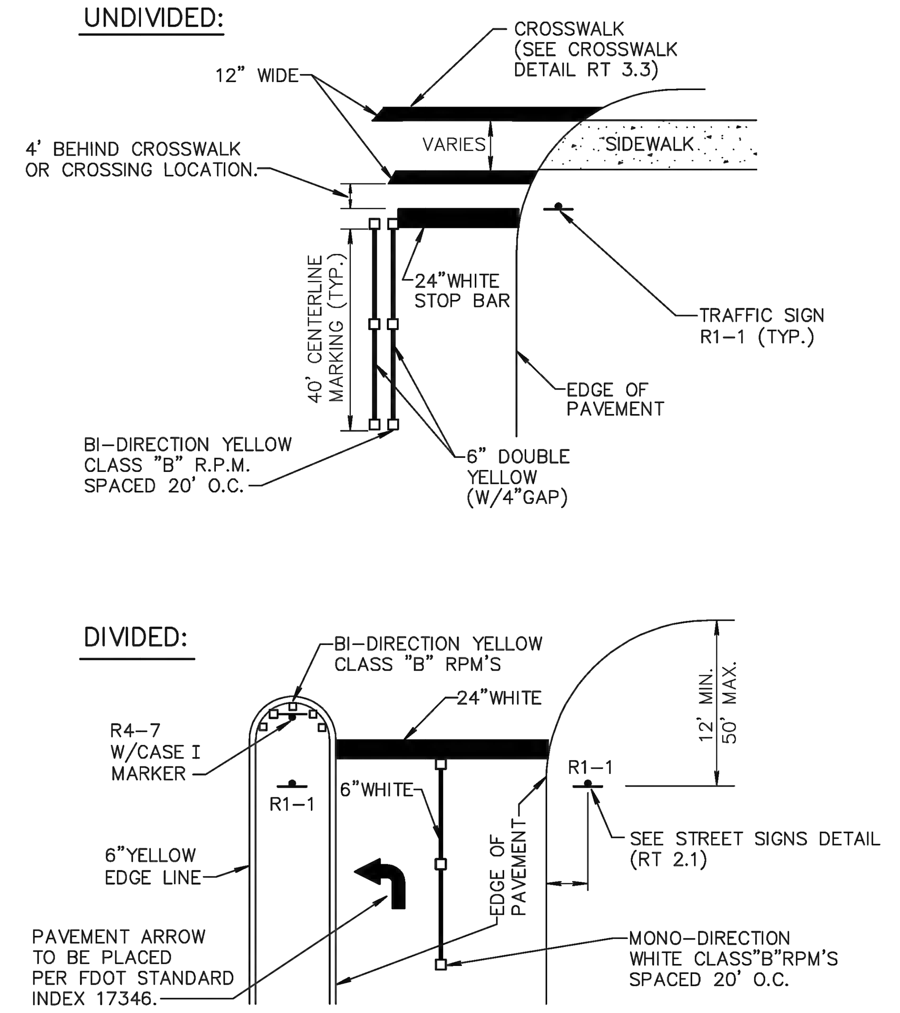

NOTE: ALL STRIPING AND DELINEATION TO CONFORM TO THE REQUIREMENTS OF THE MANUAL ON UNIFORM TRAFFIC CONTROL DEVICES, (MUTCD) LATEST ED.

CITY of DELRAY BEACH — ENVIRONMENTAL SERVICES DEPARTMENT — 434 SOUTH SWINTON AVENUE, DELRAY BEACH, FLORIDA 33444 | INTERSECTION TRAFFIC CONTROL STOP CONDITION | DATE: 08-03-2011 | RT 3.2

STANDARD CROSSWALK

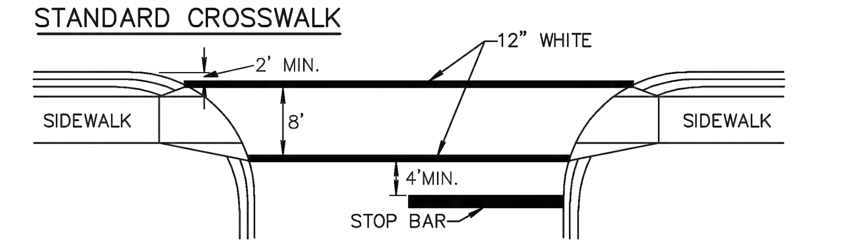

- STANDARD CROSSWALK STRIPING TO BE INSTALLED IN THE FOLLOWING LOCATIONS:
  - ALONG COLLECTORS OR ARTERIALS
  - BIKE PATH CROSSINGS
  - CROSS WALKS WITH HIGH EXPECTED PEDESTRIAN VOLUME
  - SCHOOL ACCESS ROUTES
- SIGNING REQUIRED AS PER FDOT STANDARD INDEX NO. 17346

SCHOOL CROSSWALK

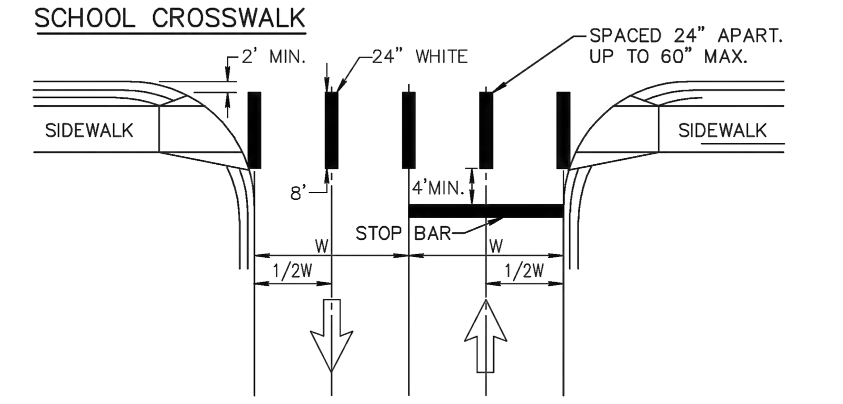

- SCHOOL CROSSWALK STRIPING TO BE USED ONLY AT DESIGNATED SUPERVISED SCHOOL CROSSING
- SIGNS AND ADVANCED PAVEMENT MESSAGES TO BE DESIGNED AND INSTALLED PER FDOT STANDARD (INDEX NO. 17346)
- CROSSWALKS LOCATED MIDBLOCK MIN. WIDTH 10'ALL CROSSWALK MARKINGS SHALL BE WHITE.
- LONGITUDINAL LINES IN SPECIAL EMPHASIS CROSSWALK SHALL BE 24" WIDE AND SPACED TO AVOID THE WHEEL PATH OF VEHICLES AS SHOWN IN DETAIL. THE SPACE BETWEEN MARKINGS SHALL NOT EXCEED 60". A LONGITUDINAL MARKING SHALL BE CENTERED AT EACH LANE LINE. ADDITIONAL LONGITUDINAL MAKINGS SHALL BE PLACED AT THE CENTER OF EACH LINE.
- WHERE THE CROSSWALK IS SKEWED TO THE LANE LANE LINES, THE SPECIAL EMPHASIS LONGITUDAL LINES SHOULD BE PARALLEL TO THE LANE LINE.

CITY of DELRAY BEACH — ENVIRONMENTAL SERVICES DEPARTMENT — 434 SOUTH SWINTON AVENUE, DELRAY BEACH, FLORIDA 33444 | CROSSWALK DETAILS | DATE: 08-03-2011 | RT 3.3

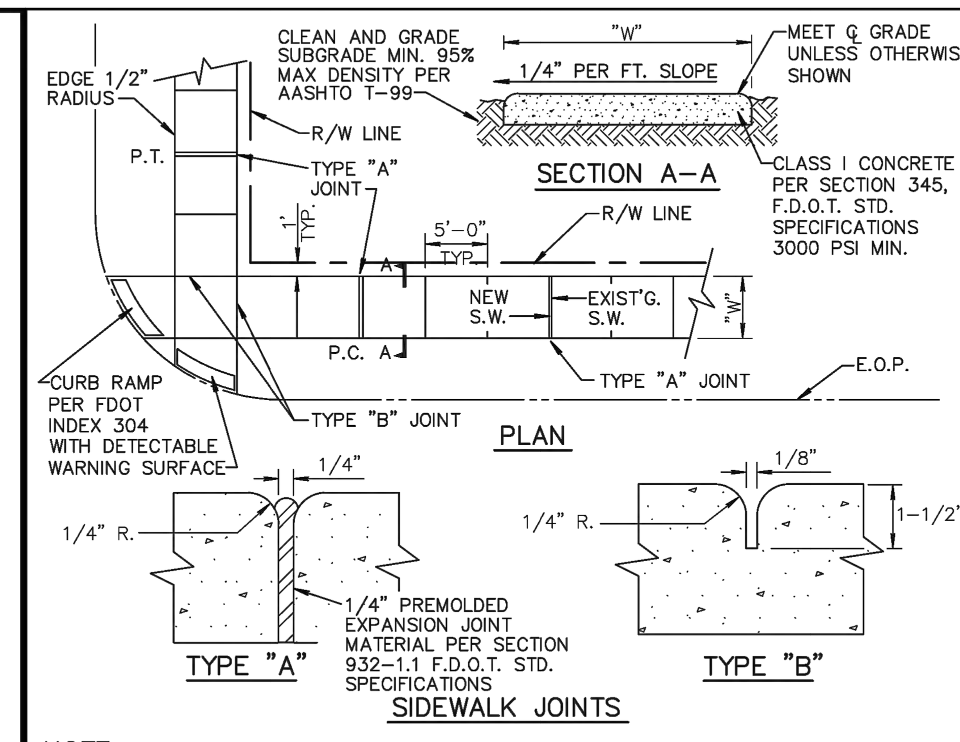

NOTE:
1. ALL SIDEWALKS SHALL BE CONSTRUCTED THRU DRIVEWAYS.
2. ALL SIDEWALKS SHALL INCLUDE ADA COMPLIANT RAMPS @ INTERSECTIONS.
2. ALL SIDEWALKS SHALL INCLUDE CROSS SLOPE AND RUNNING SLOPE IN ACCORDANCE WITH ADA REQUIREMENTS.
4. CURB RAMP DETECTALE WARNING SURFACE SHALL EXTEND THE FULL WIDTH OF THE RAMP AND 24" DEEP

TABLE OF SIDEWALK THICKNESS - "T"	
RESIDENTIAL AREAS	4"
WITHIN 10' OF CROSS-STREETS, AT DRIVEWAYS & OTHER AREAS	6",9" @E.O.P.

TABLE OF SIDEWALK WIDTHS - "W"	
SINGLE-FAMILY AREAS	5'
MULTI-FAMILY AREAS	5'
OTHER AREAS AS SPECIFIED BY THE CITY ENGINEER.	

TABLE OF SIDEWALK JOINTS

TYPE	LOCATION
"A"	P.C. AND P.T. OF CURVES JUNCTION OF EXISTING & NEW SIDEWALKS & EVERY 30'
"B"	5'-0" CENTER TO CENTER ON SIDEWALKS SCORED DURING PLACEMENT OR SAWCUT WITHIN 24 HOURS OF PLACEMENT.
"A"	WHERE SIDEWALK ABUTS CONCRETE CURBS, DRIVEWAYS, AND SIMILAR STRUCTURES.

CITY of DELRAY BEACH — ENVIRONMENTAL SERVICES DEPARTMENT — 434 SOUTH SWINTON AVENUE, DELRAY BEACH, FLORIDA 33444 | SIDEWALK CONSTRUCTION | DATE: 07-02-2014 | RT 5.1

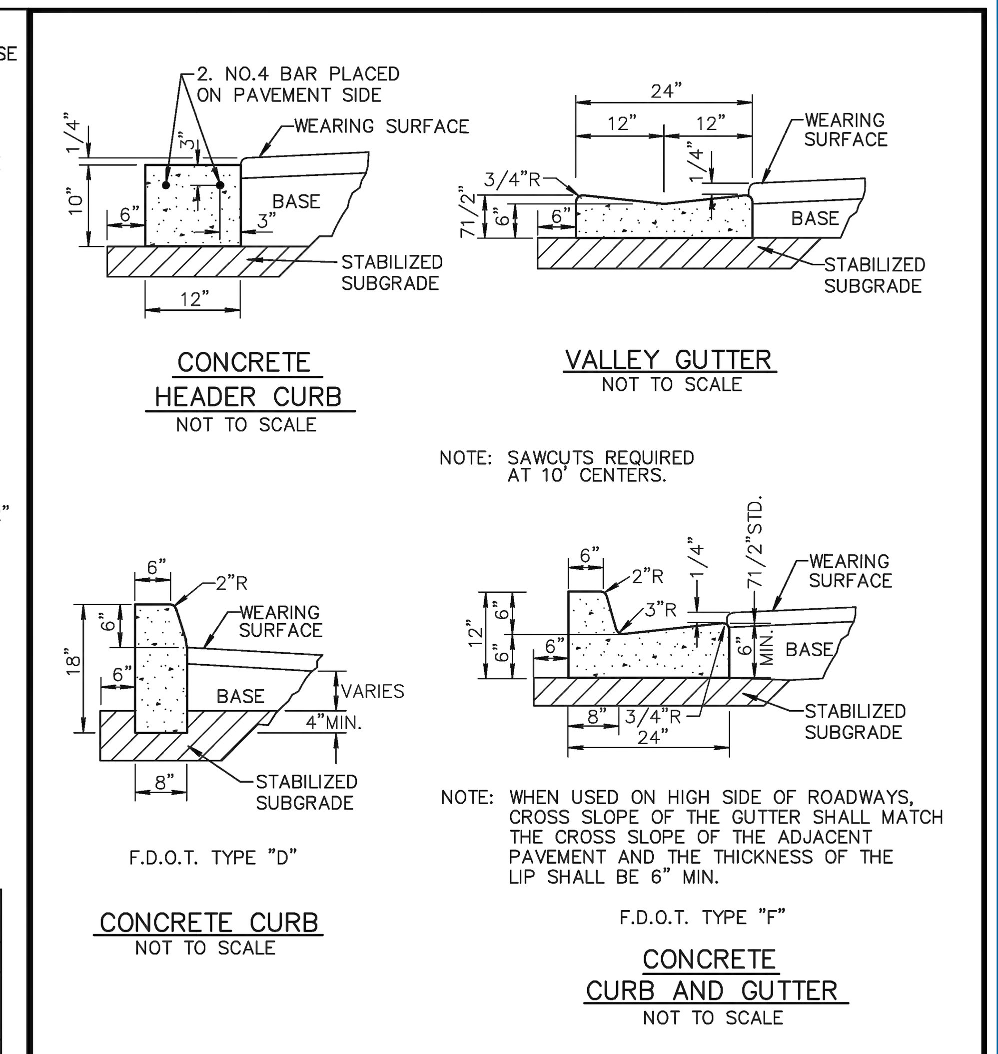

NOTES:
1. ROADWAY SUBGRADE SHALL IN ALL CASES EXTEND BELOW CURBING.
2. SAWCUTS AT 10' CENTERS SHALL BE MADE WITHIN 24 HOURS OF CONCRETE PLACEMENT.

CITY of DELRAY BEACH — ENVIRONMENTAL SERVICES DEPARTMENT — 434 SOUTH SWINTON AVENUE, DELRAY BEACH, FLORIDA 33444 | CURB AND GUTTER SECTIONS | DATE: 04-08-08 | RT 6.1

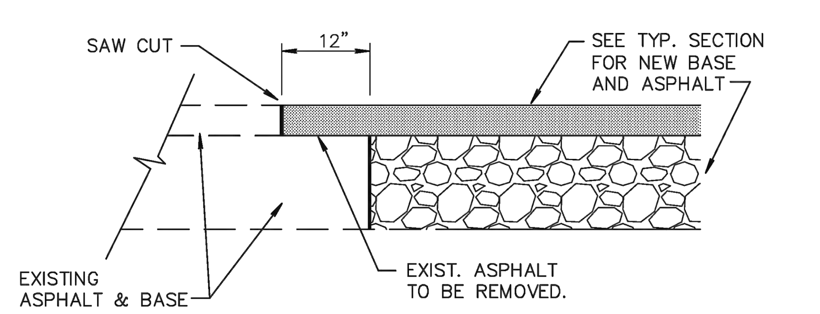

NEW CONSTRUCTION PAVEMENT JOINT

NOTE:
THIS METHOD OF PAVEMENT JOINT SHALL BE USED FOR ANY APPLICATION OR CONSTRUCTION WHERE PROPOSED PAVEMENT AND BASE WILL BE CONNECTED TO EXISTING PAVEMENT AND BASE.

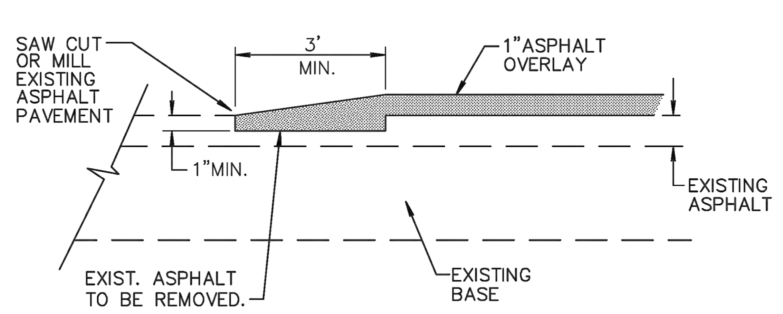

NEW OVERLAY PAVEMENT JOINT

NOTE:
THIS METHOD OF PAVEMENT JOINT SHALL BE USED FOR ANY APPLICATION OR CONSTRUCTION WHERE PROPOSED PAVEMENT WILL BE CONNECTED TO EXISTING PAVEMENT.

CITY of DELRAY BEACH — ENVIRONMENTAL SERVICES DEPARTMENT — 434 SOUTH SWINTON AVENUE, DELRAY BEACH, FLORIDA 33444 | PAVEMENT JOINT | DATE: 12-30-2002 | RT 7.1

PAVEMENT MARKING SPECIFICATIONS

All Pavement markings to be installed per these typicals, plans and specifications, and as directed by the City Engineer and shall conform to the requirements of F.D.O.T. and the manual on uniform traffic control devices, (MUTCD).

PERMANENT MARKINGS

Installation:
- All markings shall be installed by the extruded method.
- Markings shall be free of weaves, bows, drips, drags, and other degrading items.
- Chalk shall be used for all layout markings

Materials:
- All materials shall be alkyd or hydrocarbon thermoplastic meeting all FDOT specifications.

Thickness:
- All markings shall be installed to yield 90 mils of material measured above the pavement surface.

Spheres:
- Reflective glass sheres are to be applied to all stripes and markings per FDOT specifications.

Alternate Material:
- STAYMARK marking tape, or equivalent may be used, as approved or directed by the City Engineer.

Layout:
- Layout shall be made using marking chalk.
- It is recommended that marking layout be inspected by the City Engineer prior to the placement of final markings.

TEMPORARY MARKINGS

Temporary markings may be used only as specified in this section, or as approved or directed by the City Engineer.

Final Pavement Surface:
- Only foil backed marking tape is allowed.
- All tape shall be totally removed concurrent with permanent marking placement.

Other Pavement Surfaces:
- Intermediate pavement surfaces may be marked with FDOT approved materials, designs, and specifications.

CITY of DELRAY BEACH — ENVIRONMENTAL SERVICES DEPARTMENT — 434 SOUTH SWINTON AVENUE, DELRAY BEACH, FLORIDA 33444 | PAVEMENT MARKING SPECIFICATIONS (SHEET 1 OF 2) | DATE: 12-30-2002 | RT 8.1a

ALL PAVEMENT MARKINGS

All paved surfaces shall be properly marked prior to the hours of darkness.

RAISED PAVEMENT MARKERS

- R.P.M.s shall be installed on all lane lines and centerlines, spaced at 20' or 40'.
- R.P.M.s shall be a 4 x 4 type class "B" marker meeting F.D.O.T. specifications and shall be approved by the City Engineer prior to use.
- R.P.M.'s shall be installed using alkyd thermoplastic on asphalt and epoxy on concrete.

OTHER NOTES

- All Materials within right-of-way shall be thermoplastic and per F.D.O.T. specifications.
- Pavement marking within private parking lots may be painted according to F.D.O.T. specifications, except for all stop bars adjacent to public rifgt-of-way.

CITY of DELRAY BEACH — ENVIRONMENTAL SERVICES DEPARTMENT — 434 SOUTH SWINTON AVENUE, DELRAY BEACH, FLORIDA 33444 | PAVEMENT MARKING SPECIFICATIONS (SHEET 2 OF 2) | DATE: 08-04-2011 | RT 8.1b

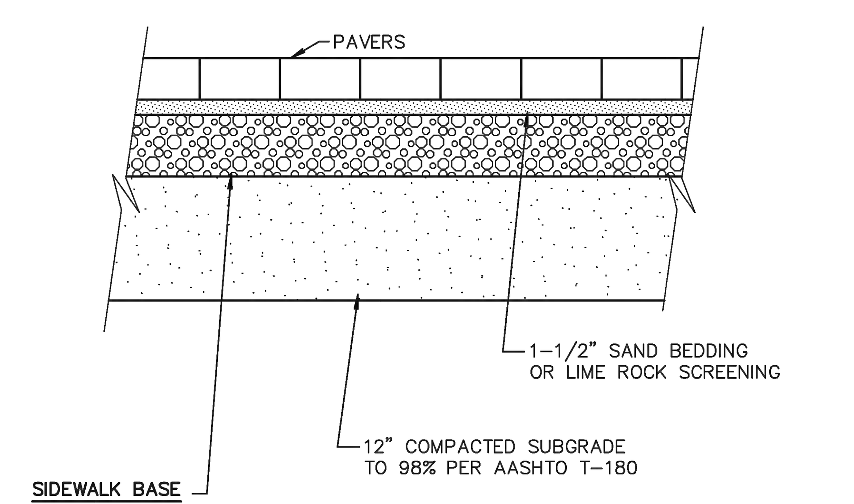

SIDEWALK BASE
OUTSIDE RIGHT OF WAY 4" LIMEROCK BASE COMPACTED TO 98% PER AASHTO T-180.
INSIDE RIGHT OF WAY 6" LIMEROCK BASE COMPACTED TO 98% PER AASHTO T-180 OR 4" FLOW-ABLE FILL (100 P.S.I. MIN.)

ROADWAY BASE
INSIDE RIGHT OF WAY 8" LIMEROCK BASE COMPACTED TO 98% PER AASHTO T-180 OR 6" FLOW-ABLE FILL (100 P.S.I. MIN.)

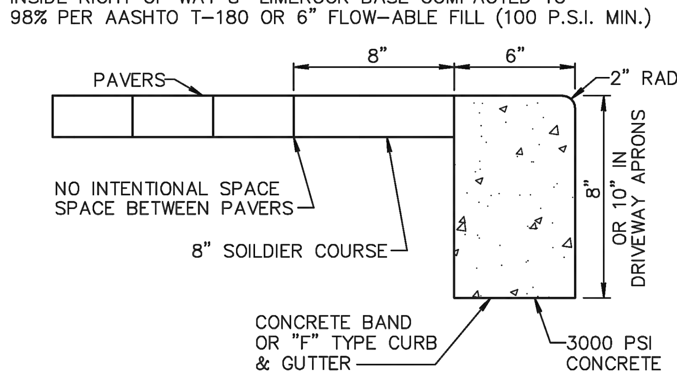

NOTE:
IF CITY APPROVES PAVERS TO BE USED IN LIEU OF CONC. SIDEWALK, PAVER SHALL BE HOLLAND-STONE, 45° HERRING BONE, RED/CHARCOAL, COLOR MIX #2.

CITY of DELRAY BEACH — ENVIRONMENTAL SERVICES DEPARTMENT — 434 SOUTH SWINTON AVENUE, DELRAY BEACH, FLORIDA 33444 | PAVER BRICK SECTION | DATE: 08-04-2011 | RT 10.1a

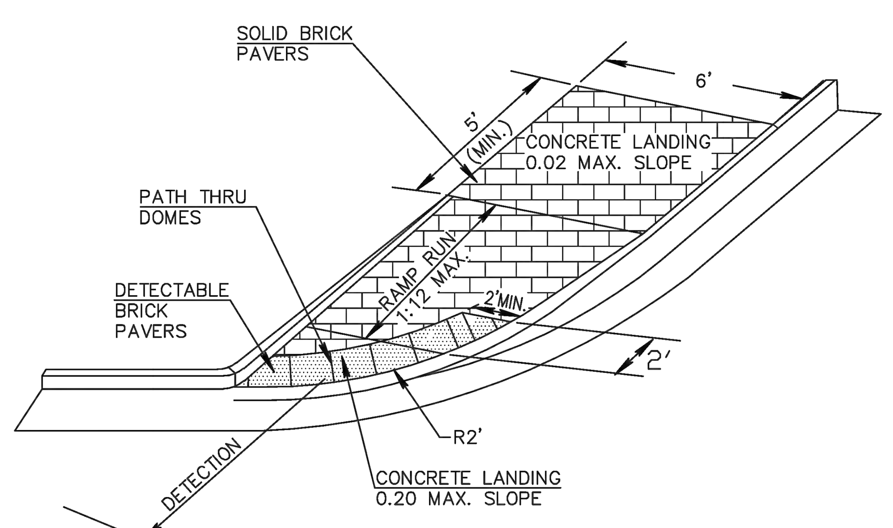

RAMP DETAIL

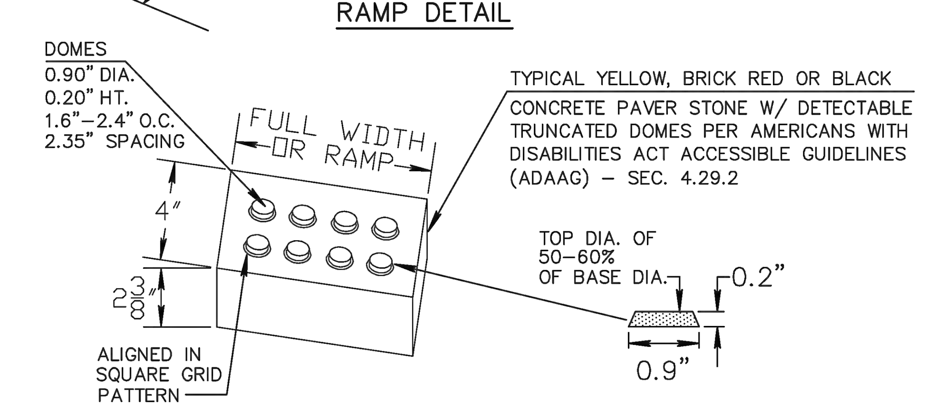

ACCESSIBLE PAVER BRICK DETAIL

1. IN ADDITION TO CURB RAMPS TRUNCATED DOMES ARE REQUIRED AT ALL AREAS OF PERIL.

CITY of DELRAY BEACH — ENVIRONMENTAL SERVICES DEPARTMENT — 434 SOUTH SWINTON AVENUE, DELRAY BEACH, FLORIDA 33444 | DETECTABLE WARNING RAMP IN PAVER SIDEWALK TYPICAL DETAIL | DATE: 6/5/2008 | RT 10.3

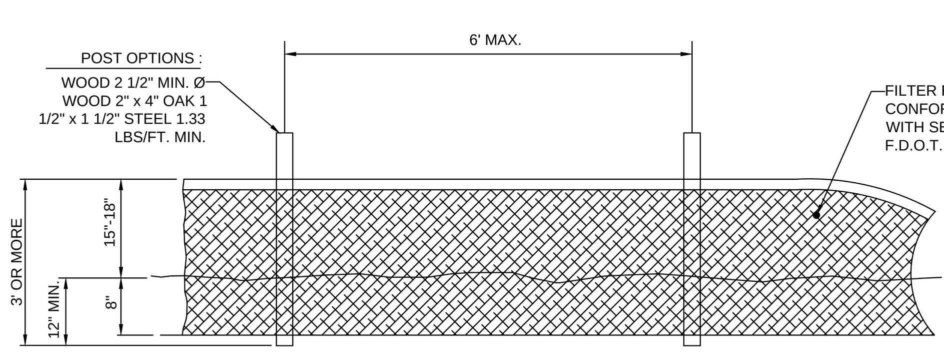

SILT FENCE DETAIL NOT TO SCALE (PER FDOT INDEX #102)

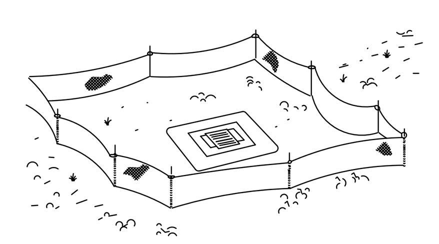

SILT FENCE PROTECTION AROUND DITCH BOTTOM INLETS

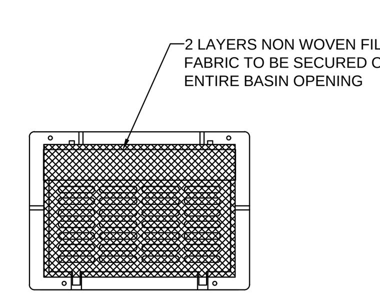

CURB INLET PROTECTION DETAIL NOT TO SCALE

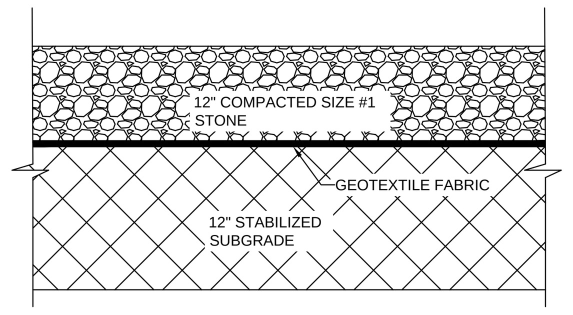

SOIL TRACKING PREVENTION MAT DETAIL NOT TO SCALE (PER FDOT INDEX #106)

BOHLER ENGINEERING
SITE CIVIL AND CONSULTING ENGINEERING
LAND SURVEYING
PROGRAM MANAGEMENT
LANDSCAPE ARCHITECTURE
SUSTAINABLE DESIGN
PERMITTING SERVICES
TRANSPORTATION SERVICES

THE INFORMATION, DESIGN AND CONTENT OF THIS PLAN ARE PROPRIETARY AND SHALL NOT BE COPIED OR USED FOR ANY PURPOSE WITHOUT PRIOR WRITTEN AUTHORIZATION FROM BOHLER ENGINEERING. ONLY APPROVED, SIGNED AND SEALED PLANS SHALL BE UTILIZED FOR CONSTRUCTION PURPOSES
© BOHLER ENGINEERING

REVISIONS

REV	DATE	COMMENT	DRAWN BY / CHECKED BY
1	2019-08-23	CITY OF DELRAY BEACH COMMENTS	LJL / AS
2	2019-09-10	SPRAB COMMENTS	LJL / AS

THIS DRAWING IS INTENDED FOR MUNICIPAL AND/OR AGENCY REVIEW AND APPROVAL. IT IS NOT INTENDED AS A CONSTRUCTION DOCUMENT UNLESS INDICATED OTHERWISE.

811 Know what's below. Call before you dig.
ALWAYS CALL 811
It's fast. It's free. It's the law.

ISSUED FOR MUNICIPAL & AGENCY REVIEW & APPROVAL

PROJECT No.:	FLB180120
DRAWN BY:	LJL
CHECKED BY:	AS
DATE:	2019-10-25
CAD I.D.:	FLB180120-SDP-1

PROJECT:
PIERRE DELRAY PHASE 1 - SPRAB SITE PLAN PACKAGE (AKA SUNTRUST BUILDING)
FOR
CLIENT
ZYSCOVICH ARCHITECTS
PROPOSED DEVELOPMENT
302 E ATLANTIC AVE
PALM BEACH COUNTY
DELRAY BEACH, FL

BOHLER ENGINEERING
2255 GLADES ROAD, SUITE 305E
BOCA RATON, FLORIDA 33431
Phone: (561) 571-0280
Fax: (561) 571-0281
FLORIDA BUSINESS CERT. OF AUTH. No. 30780
LANDSCAPE ARCHITECT BUSINESS LIC. No LC26000551

SHEET TITLE:
DETAILS

SHEET NUMBER:
C-902

REVISION 2 - 2019-09-10