SITE CONSTRUCTION PLANS

FOR

PIERRE DELRAY PHASE 1 - SPRAB SITE PLAN PACKAGE (AKA SUNTRUST BUILDING)

LOCATION OF SITE

302 EAST ATLANTIC AVE.
DELRAY BEACH, FL 33483
PALM BEACH COUNTY

CONTACT INFORMATION

CONSULTANTS

- ARCHITECT:
  ZYSCOVICH INC
  250 PARK AVENUE SOUTH, SUITE 510
  WINTER PARK, FL 32789
  407-674-1959
- CIVIL ENGINEER:
  BOHLER ENGINEERING FL
  2255 GLADES ROAD, SUITE 305E
  BOCA RATON, FL 33431
  (561) 571-0280
- BOUNDARY & TOPOGRAPHIC/ALTA SURVEY:
  BROWN & PHILLIPS, INC.
  1860 OLD OKEECHOBEE ROAD, SUITE 509
  WEST PALM BEACH, FL 33409
  561-615-3988
  DATED SEPTEMBER, 2018
- OWNER:
  PIERRE DELRAY ONE. LLC
  2000 AVENUE OF THE STARS
  11TH FLOOR
  LOS ANGELES, CA 90067

GOVERNING AGENCIES

- CITY
  CITY OF DELRAY BEACH ENGINEERING DEPT.
  434 S. SWINTON AVE
  DELRAY BEACH, FL 33444
  561-243-7822
- STORM DRAINAGE
  CITY OF DELRAY BEACH ENGINEERING DEPT.
  434 S. SWINTON AVE
  DELRAY BEACH, FL 33444
  561-243-7822

WATER/SEWER
CITY OF DELRAY BEACH UTILITIES
434 S. SWINTON AVE
DELRAY BEACH, FL 33444
561-243-7822

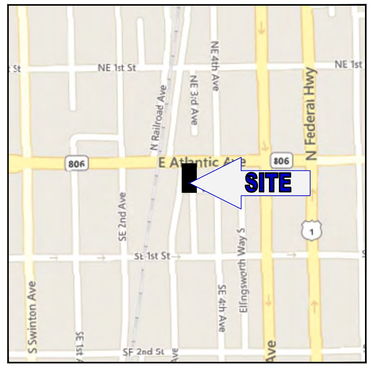

LOCATION MAP
SCALE: 1" = 500'

SHEET INDEX

SHEET TITLE	SHEET NUMBER
COVER SHEET	C-101
GENERAL NOTES	C-102
DEMOLITION PLAN KEY SHEET	C-200
DEMOLITION PLAN	C-201
DEMOLITION PLAN	C-202
DEMOLITION PLAN	C-203
SITE PLAN KEY SHEET	C-300
SITE PLAN	C-301
SITE PLAN	C-302
SITE PLAN	C-303
PAVING, GRADING, AND DRAINAGE PLAN KEY SHEET	C-400
PAVING, GRADING, AND DRAINAGE PLAN	C-401
PAVING, GRADING, AND DRAINAGE PLAN	C-402
PAVING, GRADING, AND DRAINAGE PLAN	C-403
UTILITY PLAN KEY SHEET	C-500
UTILITY PLAN	C-501
UTILITY PLAN	C-502
UTILITY PLAN	C-503
EROSION AND SEDIMENTATION CONTROL PLAN KEY SHEET	C-600
EROSION AND SEDIMENTATION CONTROL PLAN PHASE I	C-601
EROSION AND SEDIMENTATION CONTROL PLAN PHASE I	C-602
EROSION AND SEDIMENTATION CONTROL PLAN PHASE I	C-603
EROSION AND SEDIMENTATION CONTROL PLAN PHASE II	C-604
EROSION AND SEDIMENTATION CONTROL PLAN PHASE II	C-605
EROSION AND SEDIMENTATION CONTROL PLAN PHASE II	C-606
DETAILS	C-901
DETAILS	C-902
SURVEY (BY OTHERS)	N/A

LEGAL DESCRIPTION

LOTS 1, 34, 35, 36, AND THE WEST 44.00 FEET OF LOT 2, BLOCK 93, OF THE RE-SUBDIVISION OF BLOCK 93, RECORDED IN PLAT BOOK 10, PAGE 53, OF THE PUBLIC RECORDS OF PALM BEACH COUNTY, FLORIDA, TOGETHER WITH THE FOLLOWING DESCRIBED PARCEL:

BEGIN AT THE NORTHWEST CORNER OF SAID LOT 1;
THENCE ALONG THE WESTERLY EXTENSION OF THE NORTH LINE OF SAID LOT 1 FOR 1.61 FEET; THENCE SOUTHWESTERLY FOR 141.55 FEET, MORE OR LESS, TO A POINT ON THE WESTERLY EXTENSION OF SOUTH LINE OF SAID LOT 1, LYING 0.75 FEET WEST OF THE SOUTHWEST CORNER OF SAID LOT 1;
THENCE EASTERLY, ALONG SAID LINE, FOR 0.75 FEET TO THE SOUTHWEST CORNER OF SAID LOT 1;
THENCE ALONG THE WEST LINE OF SAID LOT 1, NORTHEASTERLY FOR 141.55 FEET TO THE POINT OF BEGINNING.

GENERAL NOTE:
IT IS THE RESPONSIBILITY OF THE CONTRACTOR TO REVIEW ALL OF THE DRAWINGS AND SPECIFICATIONS ASSOCIATED WITH THIS PROJECT WORK SCOPE PRIOR TO THE INITIATION OF CONSTRUCTION. SHOULD THE CONTRACTOR FIND A CONFLICT WITH THE DOCUMENTS RELATIVE TO THE SPECIFICATIONS OR APPLICABLE CODES, IT IS THE CONTRACTOR'S RESPONSIBILITY TO NOTIFY THE PROJECT ENGINEER OF RECORD IN WRITING PRIOR TO THE START OF CONSTRUCTION. FAILURE BY THE CONTRACTOR TO NOTIFY THE PROJECT ENGINEER SHALL CONSTITUTE ACCEPTANCE OF FULL RESPONSIBILITY BY THE CONTRACTOR TO COMPLETE THE SCOPE OF THE WORK AS DEFINED BY THE DRAWINGS AND IN FULL CONFORMANCE WITH LOCAL REGULATIONS AND CODES.

PREPARED BY

BOHLER ENGINEERING

2255 GLADES ROAD, SUITE 305E
BOCA RATON, FLORIDA 33431
Phone: (561) 571-0280
Fax: (561) 571-0281
FLA@BohlerEng.com
CONTACT: CHRISTOPHER CAPELLINI, PE

BOHLER ENGINEERING

SITE CIVIL AND CONSULTING ENGINEERING
LAND SURVEYING
PROGRAM MANAGEMENT
LANDSCAPE ARCHITECTURE
SUSTAINABLE DESIGN
PERMITTING SERVICES
TRANSPORTATION SERVICES

THE INFORMATION, DESIGN AND CONTENT OF THIS PLAN ARE PROPRIETARY AND SHALL NOT BE COPIED OR USED FOR ANY PURPOSE WITHOUT PRIOR WRITTEN AUTHORIZATION FROM BOHLER ENGINEERING. ©2019 BOHLER ENGINEERING

REVISIONS

REV	DATE	COMMENT	DRAWN BY / CHECKED BY
1	2019-08-23	CITY OF DELRAY BEACH COMMENTS	LJL / AS
2	2019-09-10	SPRAB COMMENTS	LJL / AS

THIS DRAWING IS INTENDED FOR MUNICIPAL AND/OR AGENCY REVIEW AND APPROVAL. IT IS NOT INTENDED AS A CONSTRUCTION DOCUMENT UNLESS INDICATED OTHERWISE.

811 Know what's below. Call before you dig.
ALWAYS CALL 811
It's fast. It's free. It's the law.

ISSUED FOR MUNICIPAL & AGENCY REVIEW & APPROVAL

PROJECT No.:	FLB180120
DRAWN BY:	LJL
CHECKED BY:	AS
DATE:	2019-10-25
CAD I.D.:	FLB180120-SDP-1

PROJECT:
PIERRE DELRAY PHASE 1 - SPRAB SITE PLAN PACKAGE (AKA SUNTRUST BUILDING)

FOR

CLIENT
ZYSCOVICH ARCHITECTS
PROPOSED DEVELOPMENT
302 E ATLANTIC AVE
PALM BEACH COUNTY
DELRAY BEACH, FL

BOHLER ENGINEERING
2255 GLADES ROAD, SUITE 305E
BOCA RATON, FLORIDA 33431
Phone: (561) 571-0280
Fax: (561) 571-0281

FLORIDA BUSINESS CERT. OF AUTH. No. 30780
LANDSCAPE ARCHITECT BUSINESS LIC. No LC26000551

SHEET TITLE:
COVER SHEET

SHEET NUMBER:
C-101

REVISION 2 - 2019-09-10

GENERAL NOTES:

CONTRACTOR IS RESPONSIBLE FOR COMPLIANCE WITH THE NOTES AND SPECIFICATIONS CONTAINED HEREIN. CONTRACTOR IS RESPONSIBLE TO ENSURE THAT ALL SUBCONTRACTORS FULLY AND COMPLETELY CONFORM TO AND COMPLY WITH THESE REQUIREMENTS.

1. THE FOLLOWING DOCUMENTS ARE INCORPORATED BY REFERENCE AS PART OF THIS SITE PLAN:

   SURVEY - SKETCH OF BOUNDARY SURVEY, 302 ATLANTIC AVENUE, PREPARED BY BROWN & PHILLIPS, INC. DATED SEPTEMBER 2018

   PRIOR TO THE START OF CONSTRUCTION, THE CONTRACTOR MUST VERIFY THAT HE/SHE HAS THE LATEST EDITION OF THE DOCUMENTS REFERENCED ABOVE. THIS IS CONTRACTOR'S RESPONSIBILITY.

2. PRIOR TO STARTING CONSTRUCTION, THE CONTRACTOR IS RESPONSIBLE TO ENSURE THAT ALL REQUIRED PERMITS AND APPROVALS HAVE BEEN OBTAINED. NO CONSTRUCTION OR FABRICATION SHALL BEGIN UNTIL THE CONTRACTOR HAS RECEIVED AND THOROUGHLY REVIEWED THE COMMENTS TO ALL PLANS AND OTHER DOCUMENTS REVIEWED AND APPROVED BY THE PERMITTING AUTHORITIES AND CONFIRMED THAT ALL NECESSARY OR REQUIRED PERMITS HAVE BEEN OBTAINED. CONTRACTOR MUST HAVE COPIES OF ALL PERMITS AND APPROVALS ON SITE AT ALL TIMES.

3. THE CONTRACTOR MUST BE FAMILIAR WITH AND RESPONSIBLE FOR THE PROCUREMENT OF ANY AND ALL CERTIFICATIONS REQUIRED FOR THE ISSUANCE OF A CERTIFICATE OF OCCUPANCY.

4. ALL WORK MUST BE PERFORMED IN ACCORDANCE WITH THESE PLANS, SPECIFICATIONS AND CONDITIONS OF APPROVAL, AND ALL APPLICABLE REQUIREMENTS, RULES, REGULATIONS, STATUTORY REQUIREMENTS, CODES, LAWS AND STANDARDS OF ALL GOVERNMENTAL ENTITIES WITH JURISDICTION OVER THIS PROJECT.

5. THE GEOTECHNICAL REPORT, TECHNICAL SPECIFICATIONS AND RECOMMENDATIONS SET FORTH HEREIN ARE A PART OF THE REQUIRED CONSTRUCTION DOCUMENTS AND, IN CASE OF CONFLICT, DISCREPANCY OR AMBIGUITY, THE MORE STRINGENT REQUIREMENTS AND/OR RECOMMENDATIONS CONTAINED IN THE PLANS AND THE GEOTECHNICAL REPORT AND RECOMMENDATIONS SHALL TAKE PRECEDENCE UNLESS SPECIFICALLY NOTED OTHERWISE ON THE PLANS. THE CONTRACTOR MUST NOTIFY THE ENGINEER, IN WRITING, OF ANY SUCH CONFLICT, DISCREPANCY OR AMBIGUITY BETWEEN THE GEOTECHNICAL REPORTS, TECHNICAL SPECIFICATIONS AND PLANS PRIOR TO PROCEEDING WITH ANY FURTHER WORK.

6. THESE PLANS ARE BASED ON INFORMATION PROVIDED TO BOHLER ENGINEERING BY THE OWNER AND OTHERS PRIOR TO THE TIME OF PLAN PREPARATION. CONTRACTOR MUST FIELD VERIFY EXISTING CONDITIONS AND NOTIFY BOHLER ENGINEERING, IN WRITING, IMMEDIATELY IF ACTUAL SITE CONDITIONS DIFFER FROM THOSE SHOWN ON THE PLAN, OR IF THE PROPOSED WORK CONFLICTS WITH ANY OTHER SITE FEATURES.

7. ALL DIMENSIONS SHOWN ON THE PLANS MUST BE FIELD VERIFIED BY THE CONTRACTOR PRIOR TO THE START OF CONSTRUCTION. CONTRACTOR MUST NOTIFY ENGINEER, IN WRITING, IF ANY CONFLICTS, DISCREPANCIES, OR AMBIGUITIES EXIST PRIOR TO PROCEEDING WITH CONSTRUCTION. NO EXTRA COMPENSATION WILL BE PAID TO THE CONTRACTOR FOR WORK WHICH HAS TO BE REDONE OR REPAIRED DUE TO DIMENSIONS OR GRADES SHOWN INCORRECTLY ON THESE PLANS PRIOR TO CONTRACTOR GIVING ENGINEER WRITTEN NOTIFICATION OF SAME AND ENGINEER, THEREAFTER, PROVIDING CONTRACTOR WITH WRITTEN AUTHORIZATION TO PROCEED WITH SUCH ADDITIONAL WORK.

8. CONTRACTOR MUST REFER TO THE ARCHITECTURAL/BUILDING PLANS "OF RECORD" FOR EXACT LOCATIONS AND DIMENSIONS OF ENTRY/EXIT POINTS, ELEVATIONS, PRECISE BUILDING DIMENSIONS, AND EXACT BUILDING UTILITY LOCATIONS.

9. PRIOR TO THE START OF CONSTRUCTION, THE CONTRACTOR MUST COORDINATE THE BUILDING LAYOUT BY CAREFUL REVIEW OF THE ENTIRE SITE PLAN AND THE LATEST ARCHITECTURAL PLANS (INCLUDING, BUT NOT LIMITED TO, STRUCTURAL, MECHANICAL, ELECTRICAL, PLUMBING AND FIRE SUPPRESSION PLAN, WHERE APPLICABLE). CONTRACTOR MUST IMMEDIATELY NOTIFY OWNER, ARCHITECT AND SITE ENGINEER, IN WRITING, OF ANY CONFLICTS, DISCREPANCIES OR AMBIGUITIES WHICH EXIST.

10. DEBRIS MUST NOT BE BURIED ON THE SUBJECT SITE AND ALL UNSUITABLE EXCAVATED MATERIAL AND DEBRIS (SOLID WASTE) MUST BE DISPOSED OF IN ACCORDANCE WITH THE REQUIREMENTS OF ANY AND ALL GOVERNMENTAL AUTHORITIES WHICH HAVE JURISDICTION OVER THIS PROJECT OR OVER CONTRACTOR.

11. THE CONTRACTOR IS RESPONSIBLE FOR IDENTIFYING WHEN SHORING AND TRENCHING IS REQUIRED AND FOR INSTALLING ALL SHORING AND TRENCHING REQUIRED DURING EXCAVATION (TO BE PERFORMED IN ACCORDANCE WITH CURRENT OSHA STANDARDS AND FLORIDA STATUTE 553.60 TRENCH SAFETY ACT) AND ANY ADDITIONAL PRECAUTIONS TO BE TAKEN TO ASSURE THE STABILITY OF ADJACENT, NEARBY AND CONTIGUOUS STRUCTURES AND PROPERTIES.

12. THE CONTRACTOR IS TO EXERCISE EXTREME CARE WHEN PERFORMING ANY WORK ACTIVITIES ADJACENT TO PAVEMENT, STRUCTURES, ETC. WHICH ARE TO REMAIN EITHER FOR AN INITIAL PHASE OF THE PROJECT OR AS PART OF THE FINAL CONDITION. CONTRACTOR IS RESPONSIBLE FOR TAKING ALL APPROPRIATE MEASURES REQUIRED TO ENSURE THE STRUCTURAL STABILITY OF SIDEWALKS AND PAVEMENT, UTILITIES, BUILDINGS, AND INFRASTRUCTURE WHICH ARE TO REMAIN, AND TO PROVIDE A SAFE WORK AREA FOR THIRD PARTIES, PEDESTRIANS AND ANYONE INVOLVED WITH THE PROJECT.

13. THE CONTRACTOR IS RESPONSIBLE FOR REPAIRING ANY DAMAGE DONE TO ANY NEW OR EXISTING CONSTRUCTION OR PROPERTY DURING THE COURSE OF CONSTRUCTION, INCLUDING BUT NOT LIMITED TO DRAINAGE, UTILITIES, PAVEMENT, STRIPING, CURB, ETC. AND SHALL BEAR ALL COSTS ASSOCIATED WITH SAME TO INCLUDE, BUT NOT BE LIMITED TO, REDESIGN, RE-SURVEY, RE-PERMITTING AND CONSTRUCTION. THE CONTRACTOR IS RESPONSIBLE FOR AND MUST REPLACE ALL SIGNAL INTERCONNECTION CABLE, WIRING CONDUITS, AND ANY UNDERGROUND ACCESSORY EQUIPMENT DAMAGED DURING CONSTRUCTION AND MUST BEAR ALL COSTS ASSOCIATED WITH SAME. THE REPAIR OF ANY SUCH NEW OR EXISTING CONSTRUCTION OR PROPERTY MUST RESTORE SUCH CONSTRUCTION OR PROPERTY TO A CONDITION EQUIVALENT TO OR BETTER THAN THE CONDITIONS PRIOR TO COMMENCEMENT OF THE CONSTRUCTION, AND IN CONFORMANCE WITH APPLICABLE CODES, LAWS RULES, REGULATIONS, STATUTORY REQUIREMENTS AND STATUTES. CONTRACTOR MUST BEAR ALL COSTS ASSOCIATED WITH SAME. CONTRACTOR IS RESPONSIBLE TO DOCUMENT ALL EXISTING DAMAGE AND TO NOTIFY THE OWNER AND THE CONSTRUCTION MANAGER PRIOR TO THE START OF CONSTRUCTION. CONTRACTOR IS RESPONSIBLE FOR REPAIRS TO FAA/DOA CABLES IMMEDIATELY PER FAA/DOA SPECIFICATIONS IN THE PRESENCE OF A FAA/DOA REPRESENTATIVE. IF FAA OR DOA ELECT TO SELF-PERFORM REPAIRS (I.E. SPLICING), CONTRACTOR WILL BE RESPONSIBLE FOR COSTS OF REPAIRS BY OTHERS.

14. ALL CONCRETE MUST BE AIR ENTRAINED AND HAVE THE MINIMUM COMPRESSIVE STRENGTH OF 4,000 PSI AT 28 DAYS UNLESS OTHERWISE NOTED ON THE PLANS, DETAILS AND/OR GEOTECHNICAL REPORT.

15. THE ENGINEER IS NOT RESPONSIBLE FOR CONSTRUCTION METHODS, MEANS, TECHNIQUES OR PROCEDURES, GENERALLY OR FOR THE CONSTRUCTION MEANs, METHODS, TECHNIQUES OR PROCEDURES FOR COMPLETION OF THE WORK DEPICTED BOTH ON THESE PLANS, AND FOR ANY CONFLICTS/SCOPE REVISIONS WHICH RESULT FROM SAME. CONTRACTOR IS RESPONSIBLE FOR DETERMINING THE METHODS/MEANS FOR COMPLETION OF THE WORK PRIOR TO THE COMMENCEMENT OF CONSTRUCTION.

16. THE ENGINEER OF RECORD IS NOT RESPONSIBLE FOR JOB SITE SAFETY. THE ENGINEER OF RECORD HAS NOT BEEN RETAINED TO PERFORM OR BE RESPONSIBLE FOR JOB SITE SAFETY, SAME BEING WHOLLY OUTSIDE OF ENGINEER'S SERVICES AS RELATED TO THE PROJECT. THE ENGINEER OF RECORD IS NOT RESPONSIBLE TO IDENTIFY OR REPORT ANY JOB SITE SAFETY ISSUES, AT ANY TIME.

17. ALL CONTRACTORS MUST CARRY THE SPECIFIED STATUTORY WORKER'S COMPENSATION INSURANCE, EMPLOYER'S LIABILITY INSURANCE AND LIMITS OF COMMERCIAL GENERAL LIABILITY INSURANCE (CGL). ALL CONTRACTORS MUST HAVE THEIR CGL POLICIES ENDORSED TO NAME BOHLER ENGINEERING, AND ITS PAST, PRESENT AND FUTURE OWNERS, OFFICERS, DIRECTORS, PARTNERS, SHAREHOLDERS, MEMBERS, PRINCIPALS, COMMISSIONERS, AGENTS, SERVANTS, EMPLOYEES, AFFILIATES, SUBSIDIARIES, AND RELATED ENTITIES, AND ITS SUBCONTRACTORS AND SUBCONSULTANTS AS ADDITIONAL NAMED INSURED AND TO PROVIDE CONTRACTUAL LIABILITY COVERAGE SUFFICIENT TO INSURE THIS HOLD HARMLESS AND INDEMNITY OBLIGATIONS ASSUMED BY THE CONTRACTORS. ALL CONTRACTORS MUST FURNISH BOHLER ENGINEERING WITH CERTIFICATIONS OF INSURANCE AS EVIDENCE OF THE REQUIRED INSURANCE PRIOR TO COMMENCING WORK AND UPON RENEWAL OF EACH POLICY DURING THE ENTIRE PERIOD OF CONSTRUCTION AND FOR ONE YEAR AFTER THE COMPLETION OF CONSTRUCTION. IN ADDITION, ALL CONTRACTORS WILL, TO THE FULLEST EXTENT PERMITTED UNDER THE LAW, INDEMNIFY, DEFEND AND HOLD HARMLESS BOHLER ENGINEERING AND ITS PAST, PRESENT AND FUTURE OWNERS, OFFICERS, DIRECTORS, PARTNERS, SHAREHOLDERS, MEMBERS, PRINCIPALS, COMMISSIONERS, AGENTS, SERVANTS, EMPLOYEES, AFFILIATES, SUBSIDIARIES, AND RELATED ENTITIES, AND ITS SUBCONTRACTORS AND SUBCONSULTANTS FROM AND AGAINST ANY DAMAGES, INJURIES, CLAIMS, ACTIONS, PENALTIES, EXPENSES, PUNITIVE DAMAGES, TORT DAMAGES, STATUTORY CLAIMS, STATUTORY CAUSES OF ACTION, LOSSES, CAUSES OF ACTION, LIABILITIES OR COSTS, INCLUDING, BUT NOT LIMITED TO, REASONABLE ATTORNEYS' FEES AND DEFENSE COSTS, ARISING OUT OF OR IN ANY WAY CONNECTED WITH OR TO THE PROJECT, INCLUDING ALL CLAIMS BY EMPLOYEES OF THE CONTRACTORS, ALL CLAIMS BY THIRD PARTIES AND ALL CLAIMS RELATED TO THE PROJECT. CONTRACTOR MUST NOTIFY ENGINEER, IN WRITING, AT LEAST THIRTY (30) DAYS PRIOR TO ANY TERMINATION, SUSPENSION OR CHANGE OF ITS INSURANCE HEREUNDER.

18. BOHLER ENGINEERING WILL REVIEW OR TAKE OTHER APPROPRIATE ACTION ON THE CONTRACTOR SUBMITTALS, SUCH AS SHOP DRAWINGS, PRODUCT DATA, SAMPLES, AND OTHER DATA, WHICH THE CONTRACTOR IS REQUIRED TO SUBMIT, BUT ONLY FOR THE LIMITED PURPOSE OF CHECKING FOR CONFORMANCE WITH THE DESIGN INTENT AND THE INFORMATION SHOWN IN THE CONSTRUCTION CONTRACT DOCUMENTS. CONSTRUCTION MEANS AND/OR METHODS AND/OR TECHNIQUES OR PROCEDURES, COORDINATION OF THE WORK WITH OTHER TRADES, AND CONSTRUCTION SAFETY PRECAUTIONS ARE THE SOLE RESPONSIBILITY OF THE CONTRACTOR AND BOHLER HAS NO RESPONSIBILITY OR LIABILITY FOR SAME HEREUNDER. BOHLER ENGINEERING'S SHOP DRAWING REVIEW WILL BE CONDUCTED WITH REASONABLE PROMPTNESS WHILE ALLOWING SUFFICIENT TIME TO PERMIT ADEQUATE REVIEW. REVIEW OF A SPECIFIC ITEM MUST NOT INDICATE THAT BOHLER ENGINEERING HAS REVIEWED THE ENTIRE ASSEMBLY OF WHICH THE ITEM IS A COMPONENT. BOHLER ENGINEERING WILL NOT BE RESPONSIBLE FOR ANY DEVIATIONS FROM THE CONSTRUCTION DOCUMENTS NOT PROMPTLY AND IMMEDIATELY BROUGHT TO ITS ATTENTION, IN WRITING, BY THE CONTRACTOR. BOHLER ENGINEERING WILL NOT BE REQUIRED TO REVIEW PARTIAL SUBMISSIONS OR THOSE FOR WHICH SUBMISSIONS OF CORRELATED ITEMS HAVE NOT BEEN RECEIVED. ANY SHOP DRAWINGS THAT RELATE TO CONSTRUCTION OUTSIDE OF THE LEASE AREA SHALL BE REVIEWED BY PBCDOA.

19. NEITHER THE PROFESSIONAL ACTIVITIES OF BOHLER ENGINEERING, NOR THE PRESENCE OF BOHLER ENGINEERING AND/OR ITS PAST, PRESENT AND FUTURE OWNERS, OFFICERS, DIRECTORS, PARTNERS, SHAREHOLDERS, MEMBERS, PRINCIPALS, COMMISSIONERS, AGENTS, SERVANTS, EMPLOYEES, AFFILIATES, SUBSIDIARIES, AND RELATED ENTITIES, AND ITS SUBCONTRACTORS AND SUBCONSULTANTS AT A CONSTRUCTION/PROJECT SITE, SHALL RELIEVE THE GENERAL CONTRACTOR OF ITS OBLIGATIONS, DUTIES AND RESPONSIBILITIES INCLUDING, BUT NOT LIMITED TO, CONSTRUCTION MEANS, METHODS, SEQUENCE, TECHNIQUES OR PROCEDURES NECESSARY FOR PERFORMING, OVERSEEING, SUPERINTENDING AND COORDINATING THE WORK IN ACCORDANCE WITH THE CONTRACT DOCUMENTS AND COMPLIANCE ANY HEALTH OR SAFETY PRECAUTIONS REQUIRED BY ANY REGULATORY AGENCIES WITH JURISDICTION OVER THE PROJECT AND/OR PROPERTY. BOHLER ENGINEERING AND ITS PERSONNEL HAVE NO AUTHORITY TO EXERCISE ANY CONTROL OVER ANY CONSTRUCTION CONTRACTOR OR ITS EMPLOYEES IN CONNECTION WITH THEIR WORK OR ANY HEALTH OR SAFETY PROGRAMS OR PROCEDURES. THE GENERAL CONTRACTOR IS SOLELY RESPONSIBLE FOR JOB SITE SAFETY. BOHLER ENGINEERING SHALL BE INDEMNIFIED BY THE GENERAL CONTRACTOR AND MUST BE NAMED AN ADDITIONAL INSURED UNDER THE GENERAL CONTRACTOR'S POLICIES OF GENERAL LIABILITY INSURANCE AS DESCRIBED ABOVE IN NOTE 19 FOR JOB SITE SAFETY.

20. IF THE CONTRACTOR DEVIATES FROM THE PLANS AND SPECIFICATIONS, INCLUDING THE NOTES CONTAINED HEREIN, WITHOUT FIRST OBTAINING THE PRIOR WRITTEN AUTHORIZATION OF THE ENGINEER FOR SUCH DEVIATIONS, THE CONTRACTOR IS SOLELY RESPONSIBLE FOR THE PAYMENT OF ALL COSTS INCURRED IN CORRECTING ANY WORK DONE WHICH DEVIATES FROM THE PLANS, ALL FINES AND/OR PENALTIES ASSESSED WITH RESPECT THERETO AND ALL COMPENSATORY OR PUNITIVE DAMAGES RESULTING THEREFROM AND, FURTHER, SHALL DEFEND, INDEMNIFY AND HOLD HARMLESS THE ENGINEER, TO THE FULLEST EXTENT PERMITTED UNDER THE LAW, IN ACCORDANCE WITH PARAGRAPH 19 HEREIN, FOR AND FROM ALL FEES, ATTORNEYS' FEES, DAMAGES, COSTS, JUDGMENTS, PENALTIES AND THE LIKE RELATED TO SAME.

21. CONTRACTOR IS RESPONSIBLE FOR MAINTENANCE AND PROTECTION OF TRAFFIC PLAN FOR ALL WORK THAT AFFECTS PUBLIC TRAVEL EITHER IN THE R.O.W. OR ON SITE AND SECURITY OF THE AOA. THE COST FOR THIS ITEM MUST BE INCLUDED IN THE CONTRACTOR'S PRICE.

22. ALL SIGNING AND PAVEMENT STRIPING MUST CONFORM TO MANUAL ON UNIFORM TRAFFIC CONTROL DEVICES OR LOCALLY APPROVED SUPPLEMENT. REFER TO FAA FOR AIRFIELD SIGNAGE, LIGHTING AND MARKING.

23. ENGINEER IS NOT RESPONSIBLE FOR ANY INJURY OR DAMAGES RESULTING FROM CONTRACTOR'S FAILURE TO BUILD OR CONSTRUCT IN STRICT ACCORDANCE WITH THE APPROVED PLANS. IF CONTRACTOR AND/OR OWNER FAIL BUILD OR CONSTRUCT IN STRICT ACCORDANCE WITH APPROVED PLANS, THEY AGREE TO JOINTLY AND SEVERALLY INDEMNIFY AND HOLD ENGINEER HARMLESS FOR ALL INJURIES AND DAMAGES THAT ENGINEER SUFFERS AND COSTS THAT ENGINEER INCURS.

24. OWNER MUST MAINTAIN AND PRESERVE ALL PHYSICAL SITE FEATURES AND DESIGN FEATURES DEPICTED ON THE PLANS AND RELATED DOCUMENTS, IN STRICT ACCORDANCE WITH THE APPROVED PLAN(S) AND DESIGN AND, FURTHER ENGINEER IS NOT RESPONSIBLE FOR ANY FAILURE TO SO MAINTAIN OR PRESERVE SITE AND/OR DESIGN FEATURES. IF OWNER FAILS TO MAINTAIN AND/OR PRESERVE ALL PHYSICAL SITE FEATURES AND/OR DESIGN FEATURES DEPICTED ON THE PLANS AND RELATED DOCUMENTS, OWNER AGREES TO INDEMNIFY AND HOLD ENGINEER HARMLESS FOR ALL INJURIES AND DAMAGES THAT ENGINEER SUFFERS AND COSTS THAT ENGINEER INCURS AS A RESULT OF SAID FAILURE.

25. ALL DIMENSIONS MUST BE TO FACE OF CURB, EDGE OF PAVEMENT, OR EDGE OF BUILDING, UNLESS NOTED OTHERWISE.

26. ALL CONSTRUCTION AND MATERIALS MUST COMPLY WITH AND CONFORM TO APPLICABLE FEDERAL, STATE AND LOCAL REGULATIONS, LAWS, ORDINANCES, RULES AND CODES, AND ALL APPLICABLE OSHA REQUIREMENTS.

27. CONTRACTOR AND OWNER MUST INSTALL ALL ELEMENTS AND COMPONENTS IN STRICT COMPLIANCE WITH AND ACCORDANCE WITH MANUFACTURER'S STANDARDS AND RECOMMENDED INSTALLATION CRITERIA AND SPECIFICATIONS. IF CONTRACTOR AND/OR OWNER FAIL TO DO SO, THEY AGREE TO JOINTLY AND SEVERALLY INDEMNIFY AND HOLD ENGINEER HARMLESS FOR ALL INJURIES AND DAMAGES THAT ENGINEER SUFFERS AND COSTS THAT ENGINEER INCURS AS A RESULT OF SAID FAILURE.

28. CONTRACTOR IS RESPONSIBLE TO MAINTAIN ON-SITE STORMWATER POLLUTION PREVENTION PLAN (SWPPP) IN COMPLIANCE WITH EPA REQUIREMENTS FOR SITES WHERE ONE (1) ACRE OR MORE (UNLESS THE LOCAL JURISDICTION REQUIRES FEWER) IS DISTURBED BY CONSTRUCTION ACTIVITIES. CONTRACTOR IS RESPONSIBLE TO ENSURE THAT ALL ACTIVITIES, INCLUDING THOSE OF SUBCONTRACTORS, ARE IN COMPLIANCE WITH THE SWPPP AND SFWMD, INCLUDING BUT NOT LIMITED TO LOGGING ACTIVITIES (MINIMUM ONCE PER WEEK AND AFTER RAINFALL EVENTS) AND CORRECTIVE MEASURES, AS APPROPRIATE.

29. AS CONTAINED IN THESE DRAWINGS AND ASSOCIATED APPLICATION DOCUMENTS PREPARED BY THE SIGNATORY PROFESSIONAL ENGINEER, THE USE OF THE WORDS CERTIFY OR CERTIFICATION CONSTITUTES AN EXPRESSION OF "PROFESSIONAL OPINION" REGARDING THE INFORMATION WHICH IS THE SUBJECT OF THE UNDERSIGNED PROFESSIONAL KNOWLEDGE OR BELIEF AND IN ACCORDANCE WITH COMMON ACCEPTED PROCEDURE CONSISTENT WITH THE APPLICABLE STANDARDS OF PRACTICE, AND DOES NOT CONSTITUTE A WARRANTY OR GUARANTEE, EITHER EXPRESSED OR IMPLIED.

ADA INSTRUCTIONS TO CONTRACTOR

CONTRACTORS SHALL EXERCISE APPROPRIATE CARE AND PRECISION IN CONSTRUCTION OF ADA (HANDICAP) ACCESSIBLE COMPONENTS AND ACCESS ROUTES FOR THE SITE. THESE COMPONENTS, AS CONSTRUCTED, MUST COMPLY WITH THE CURRENT ADA STANDARDS AND REGULATIONS' BARRIER FREE ACCESS AND ANY MODIFICATIONS, REVISIONS OR UPDATES TO SAME. FINISHED SURFACES ALONG THE ACCESSIBLE ROUTE OF TRAVEL FROM PARKING SPACE, PUBLIC TRANSPORTATION, PEDESTRIAN ACCESS, INTER-BUILDING ACCESS, TO POINTS OF ACCESSIBLE BUILDING ENTRANCE/EXIT, MUST COMPLY WITH THESE ADA CODE REQUIREMENTS. THESE INCLUDE, BUT ARE NOT LIMITED TO THE FOLLOWING:

- PARKING SPACES AND PARKING AISLES - SLOPE SHALL NOT EXCEED 1:48 IN ANY DIRECTION.
- CURB RAMPS - SLOPE SHALL NOT EXCEED 1:12 (8.3%).
- LANDINGS - SHALL BE PROVIDED AT EACH END OF RAMPS, MUST PROVIDE POSITIVE DRAINAGE, AND MUST NOT EXCEED 1:48 IN ANY DIRECTION.
- PATH OF TRAVEL ALONG ACCESSIBLE ROUTE - MUST PROVIDE A 36-INCH OR GREATER UNOBSTRUCTED WIDTH OF TRAVEL (CAR OVERHANGS AND/OR HANDRAILS CANNOT REDUCE THIS MINIMUM WIDTH). THE SLOPE MUST BE NO GREATER THAN 1:20 (5.0%) IN THE DIRECTION OF TRAVEL, AND MUST NOT EXCEED 1:48 IN CROSS SLOPE. WHERE PATH OF TRAVEL WILL BE GREATER THAN 1:20 (5.0%), ADA RAMP REQUIREMENTS MUST BE ADHERED TO. A MAXIMUM SLOPE OF 1:12 (8.3%), FOR A MAXIMUM RISE OF 2.5 FEET (30 INCHES), SHALL BE PROVIDED. THE RAMP MUST HAVE ADA HAND RAILS AND 60" W BY 60" L LANDINGS ON EACH END THAT ARE CROSS SLOPED NO MORE THAN 1:48 IN ANY DIRECTION FOR POSITIVE DRAINAGE.
- DOORWAYS - MUST HAVE A "LEVEL" LANDING AREA ON THE EXTERIOR SIDE OF THE DOOR THAT IS SLOPED AWAY FROM THE DOOR NO MORE THAN 1:48 FOR POSITIVE DRAINAGE. THIS LANDING AREA MUST BE NO LESS THAN 60 INCHES (5 FEET) LONG, EXCEPT WHERE OTHERWISE PERMITTED BY ADA STANDARDS FOR ALTERNATIVE DOORWAY OPENING CONDITIONS. (SEE ICC/ANSI A117.1-2009 AND OTHER REFERENCED INCORPORATED BY COD.)
- WHEN THE PROPOSED CONSTRUCTION INVOLVES RECONSTRUCTION, MODIFICATION, REVISION OR EXTENSION OF OR TO ADA COMPONENTS FROM EXISTING DOORWAYS OR SURFACES, CONTRACTOR MUST VERIFY EXISTING ELEVATIONS SHOWN ON THE PLAN. NOTE THAT TABLE 405.2 OF THE DEPARTMENT OF JUSTICE'S ADA STANDARDS FOR ACCESSIBLE DESIGN ALLOWS FOR STEEPER RAMP SLOPES, IN RARE CIRCUMSTANCES. THE CONTRACTOR MUST IMMEDIATELY NOTIFY THE DESIGN ENGINEER OF ANY DISCREPANCIES AND/OR FIELD CONDITIONS THAT DIFFER IN ANY WAY OR ANY RESPECT FROM WHAT IS SHOWN ON THE PLANS, IN WRITING, BEFORE COMMENCEMENT OF WORK. CONSTRUCTED IMPROVEMENTS MUST FALL WITHIN THE MAXIMUM AND MINIMUM LIMITATIONS IMPOSED BY THE BARRIER FREE REGULATIONS AND THE ADA REQUIREMENTS.
- THE CONTRACTOR MUST VERIFY THE SLOPES OF CONTRACTOR'S FORMS PRIOR TO POURING CONCRETE. IF ANY NON-CONFORMANCE IS OBSERVED OR EXISTS, CONTRACTOR MUST IMMEDIATELY NOTIFY THE ENGINEER PRIOR TO POURING CONCRETE. CONTRACTOR IS RESPONSIBLE FOR ALL COSTS TO REMOVE, REPAIR AND REPLACE NON-CONFORMING CONCRETE.
- ALL ACCESSIBLE (A/K/A ADA) PARKING SPACES MUST BE CONSTRUCTED TO MEET, AT A MINIMUM, THE MORE STRINGENT OF THE REQUIREMENTS OF THE "AMERICANS WITH DISABILITIES ACT" (ADA) CODE (42 U.S.C. § 12101 ET SEQ. AND 42 U.S.C. § 4151 ET SEQ.) OR THE REQUIREMENTS OF THE JURISDICTION WHERE THE PROJECT IS TO BE CONSTRUCTED, AND ANY AND ALL AMENDMENTS TO BOTH WHICH ARE IN EFFECT WHEN THESE PLANS ARE COMPLETED.

IT IS STRONGLY RECOMMENDED THAT THE CONTRACTOR REVIEW THE INTENDED CONSTRUCTION WITH THE LOCAL BUILDING CODE PRIOR TO COMMENCEMENT OF CONSTRUCTION.

GENERAL DEMOLITION NOTES:

1. THIS PLAN REFERENCES DOCUMENTS AND INFORMATION BY:

   BROWN & PHILLIPS, INC
   1860 OLD OKEECHOBEE ROAD
   WEST PALM BEACH, FLORIDA 33409
   561-615-3988
   CERTIFICATE OF AUTHORIZATION #LB6473

2. CONTRACTOR SHALL PERFORM ALL WORK IN ACCORDANCE WITH THE REQUIREMENTS OF THE OCCUPATIONAL SAFETY AND HEALTH ACT OF 1970, (29 U.S.C. 651 et seq.), AS AMENDED AND ANY MODIFICATIONS, AMENDMENTS OR REVISIONS TO SAME.

3. BOHLER ENGINEERING HAS NO CONTRACTUAL, LEGAL, OR OTHER RESPONSIBILITY FOR JOB SITE SAFETY OR JOB SITE SUPERVISION, OR ANYTHING RELATED TO SAME.

4. THE DEMOLITION PLAN IS INTENDED TO PROVIDE GENERAL INFORMATION, ONLY, REGARDING ITEMS TO BE DEMOLISHED AND/OR REMOVED. THE CONTRACTOR MUST ALSO REVIEW THE OTHER SITE PLAN DRAWINGS AND INCLUDE IN DEMOLITION ACTIVITIES ALL INCIDENTAL WORK NECESSARY FOR THE CONSTRUCTION OF THE NEW SITE IMPROVEMENTS.

5. CONTRACTOR MUST RAISE ANY QUESTIONS CONCERNING THE ACCURACY OR INTENT OF THESE PLANS OR SPECIFICATIONS, CONCERNS REGARDING THE APPLICABLE SAFETY STANDARDS, OR THE SAFETY OF THE CONTRACTOR OR THIRD PARTIES IN PERFORMING THE WORK ON THIS PROJECT, WITH BOHLER ENGINEERING, IN WRITING, AND RESPONDED TO BY BOHLER, IN WRITING, PRIOR TO THE INITIATION OF ANY SITE ACTIVITY AND ANY DEMOLITION ACTIVITY. ALL DEMOLITION ACTIVITIES MUST BE PERFORMED IN ACCORDANCE WITH THE REQUIREMENTS OF THESE PLANS AND SPECIFICATIONS AND ALL APPLICABLE FEDERAL, STATE AND LOCAL REGULATIONS, RULES, REQUIREMENTS, STATUTES, ORDINANCES AND CODES.

6. PRIOR TO STARTING ANY DEMOLITION, CONTRACTOR IS RESPONSIBLE FOR/TO:

   A. OBTAINING ALL REQUIRED PERMITS AND MAINTAINING THE SAME ON SITE FOR REVIEW BY THE ENGINEER AND OTHER PUBLIC AGENCIES HAVING JURISDICTION THROUGHOUT THE DURATION OF THE PROJECT, SITE WORK AND DEMOLITION WORK.

GENERAL GRADING & UTILITY NOTES

1. LOCATIONS OF ALL EXISTING AND PROPOSED SERVICES ARE APPROXIMATE AND MUST BE INDEPENDENTLY CONFIRMED WITH LOCAL UTILITY COMPANIES PRIOR TO COMMENCEMENT OF ANY CONSTRUCTION OR EXCAVATION. SANITARY SEWER AND ALL OTHER UTILITY SERVICE CONNECTION POINTS MUST BE INDEPENDENTLY CONFIRMED BY THE CONTRACTOR IN THE FIELD PRIOR TO THE COMMENCEMENT OF CONSTRUCTION. ALL DISCREPANCIES MUST IMMEDIATELY BE REPORTED, IN WRITING, TO THE ENGINEER. CONSTRUCTION MUST COMMENCE BEGINNING AT THE LOWEST INVERT (POINT OF CONNECTION) AND PROGRESS UP GRADIENT. PROPOSED INTERFACE POINTS (CROSSINGS) WITH EXISTING UNDERGROUND UTILITIES SHALL BE FIELD VERIFIED BY TEST PIT PRIOR TO COMMENCEMENT OF CONSTRUCTION.

2. CONTRACTOR MUST VERTICALLY AND HORIZONTALLY LOCATE ALL UTILITIES AND SERVICES INCLUDING, BUT NOT LIMITED TO, GAS, WATER, ELECTRIC, SANITARY AND STORM SEWER, TELEPHONE, CABLE, FIBER OPTIC CABLE, ETC. WITHIN THE LIMITS OF DISTURBANCE OR WORK SPACE, WHICHEVER IS GREATER. THE CONTRACTOR MUST USE, REFER TO, AND COMPLY WITH THE REQUIREMENTS OF THE APPLICABLE UTILITY NOTIFICATION SYSTEM TO LOCATE ALL THE UNDERGROUND UTILITIES. THE CONTRACTOR IS RESPONSIBLE FOR REPAIRING ALL DAMAGE TO ANY EXISTING UTILITIES DURING CONSTRUCTION, AT NO COST TO THE OWNER. CONTRACTOR SHALL BEAR ALL COSTS ASSOCIATED WITH DAMAGE TO ANY EXISTING UTILITIES DURING CONSTRUCTION.

3. IT IS THE CONTRACTOR'S RESPONSIBILITY TO REVIEW ALL CONSTRUCTION CONTRACT DOCUMENTS INCLUDING, BUT NOT LIMITED TO, ALL OF THE DRAWINGS AND SPECIFICATIONS ASSOCIATED WITH THE PROJECT WORK SCOPE PRIOR TO THE INITIATION AND COMMENCEMENT OF CONSTRUCTION. SHOULD THE CONTRACTOR FIND A CONFLICT AND/OR DISCREPANCY BETWEEN THE DOCUMENTS RELATIVE TO THE SPECIFICATIONS OR THE RELATIVE OR APPLICABLE CODES, REGULATIONS, LAWS, RULES, STATUTES AND/OR ORDINANCES, IT IS THE CONTRACTOR'S SOLE RESPONSIBILITY TO NOTIFY THE PROJECT ENGINEER OF RECORD, IN WRITING, OF SAID CONFLICT AND/OR DISCREPANCY PRIOR TO THE START OF CONSTRUCTION. CONTRACTOR'S FAILURE TO NOTIFY THE PROJECT ENGINEER SHALL CONSTITUTE CONTRACTOR'S FULL AND COMPLETE ACCEPTANCE OF ALL RESPONSIBILITY TO COMPLETE THE SCOPE OF WORK AS DEFINED BY THE DRAWINGS AND IN FULL COMPLIANCE WITH ALL FEDERAL, STATE AND LOCAL REGULATIONS, LAWS, STATUTES, ORDINANCES AND CODES AND, FURTHER, CONTRACTOR SHALL BE RESPONSIBLE FOR ALL COSTS ASSOCIATED WITH SAME.

4. THE CONTRACTOR MUST LOCATE AND CLEARLY AND UNAMBIGUOUSLY DEFINE VERTICALLY AND HORIZONTALLY ALL ACTIVE AND INACTIVE UTILITY AND/OR SERVICE SYSTEMS THAT ARE TO BE REMOVED. THE CONTRACTOR IS RESPONSIBLE TO PROTECT AND MAINTAIN ALL ACTIVE AND INACTIVE SYSTEMS THAT ARE NOT BEING REMOVED/RELOCATED DURING SITE ACTIVITY.

5. THE CONTRACTOR MUST FAMILIARIZE ITSELF WITH THE APPLICABLE UTILITY SERVICE PROVIDER REQUIREMENTS AND IS RESPONSIBLE FOR ALL COORDINATION REGARDING UTILITY DEMOLITION AS IDENTIFIED OR REQUIRED FOR THE PROJECT. THE CONTRACTOR MUST PROVIDE THE OWNER WITH WRITTEN NOTIFICATION THAT THE EXISTING UTILITIES AND SERVICES HAVE BEEN TERMINATED AND ABANDONED IN ACCORDANCE WITH THE JURISDICTION AND UTILITY COMPANY REQUIREMENTS AND ALL OTHER APPLICABLE REQUIREMENTS, RULES, STATUTES, LAWS, ORDINANCES AND CODES.

6. THE CONTRACTOR MUST INSTALL ALL STORM SEWER AND SANITARY SEWER COMPONENTS WHICH FUNCTION BY GRAVITY PRIOR TO THE INSTALLATION OF ALL OTHER UTILITIES.

7. CONTRACTOR IS RESPONSIBLE FOR COORDINATION OF SITE PLAN DOCUMENTS AND ARCHITECTURAL DESIGN FOR EXACT BUILDING UTILITY CONNECTION LOCATIONS, GREASE TRAP REQUIREMENTS/DETAILS, DOOR ACCESS, AND EXTERIOR GRADING. THE ARCHITECT WILL DETERMINE THE UTILITY SERVICE SIZES. THE CONTRACTOR MUST COORDINATE INSTALLATION OF UTILITIES/SERVICES WITH THE INDIVIDUAL COMPANIES, TO AVOID CONFLICTS AND TO ENSURE THAT PROPER DEPTHS ARE ACHIEVED. THE CONTRACTOR IS RESPONSIBLE FOR ENSURING THAT INSTALLATION OF ALL IMPROVEMENTS COMPLIES WITH ALL UTILITY REQUIREMENTS WITH JURISDICTION AND/OR CONTROL OF THE SITE, AND ALL OTHER APPLICABLE REQUIREMENTS, RULES, STATUTES, LAWS, ORDINANCES AND CODES AND, FURTHER, IS RESPONSIBLE FOR COORDINATING THE UTILITY TIE-INS/CONNECTIONS PRIOR TO CONNECTING TO THE EXISTING UTILITY/SERVICE. WHERE A CONFLICT(S) EXISTS BETWEEN THESE SITE PLANS AND THE ARCHITECTURAL PLANS, OR WHERE ARCHITECTURAL PLAN UTILITY CONNECTION POINTS DIFFER, THE CONTRACTOR MUST IMMEDIATELY NOTIFY THE ENGINEER, IN WRITING, AND PRIOR TO CONSTRUCTION, RESOLVE SAME.

8. WATER SERVICE MATERIALS, BURIAL DEPTH, AND COVER REQUIREMENTS MUST BE SPECIFIED BY THE LOCAL UTILITY COMPANY. CONTRACTOR'S PRICE FOR WATER SERVICE MUST INCLUDE ALL FEES, COSTS AND APPURTENANCES REQUIRED BY THE UTILITY TO PROVIDE FULL AND COMPLETE WORKING SERVICE. CONTRACTOR MUST CONTACT THE APPLICABLE MUNICIPALITY TO CONFIRM THE PROPER WATER METER AND VAULT, PRIOR TO COMMENCING CONSTRUCTION.

9. ALL NEW UTILITIES/SERVICES, INCLUDING ELECTRIC, TELEPHONE, CABLE TV, ETC. ARE TO BE INSTALLED UNDERGROUND. ALL NEW UTILITIES/SERVICES MUST BE INSTALLED IN ACCORDANCE WITH THE UTILITY/SERVICE PROVIDER INSTALLATION SPECIFICATIONS AND STANDARDS.

10. SITE GRADING MUST BE PERFORMED IN ACCORDANCE WITH THESE PLANS AND SPECIFICATIONS AND THE RECOMMENDATIONS SET FORTH IN THE GEOTECHNICAL REPORT REFERENCED IN THIS PLAN SET. THE CONTRACTOR IS RESPONSIBLE FOR REMOVING AND REPLACING UNSUITABLE MATERIALS WITH SUITABLE MATERIALS AS SPECIFIED IN THE GEOTECHNICAL REPORT. ALL EXCAVATED OR FILLED AREAS MUST BE COMPACTED AS OUTLINED IN THE GEOTECHNICAL REPORT. MOISTURE CONTENT AT TIME OF PLACEMENT MUST BE SUBMITTED IN A COMPACTION REPORT PREPARED BY A QUALIFIED GEOTECHNICAL ENGINEER, REGISTERED WITH THE STATE WHERE THE WORK IS PERFORMED, VERIFYING THAT ALL FILLED AREAS AND SUBGRADE AREAS WITHIN THE BUILDING PAD AREA AND AREAS TO BE PAVED HAVE BEEN COMPACTED IN ACCORDANCE WITH THESE PLANS, SPECIFICATIONS AND THE RECOMMENDATIONS SET FORTH IN THE GEOTECHNICAL REPORT AND ALL APPLICABLE REQUIREMENTS, RULES, STATUTES, LAWS, ORDINANCES AND CODES. SUBBASE MATERIAL FOR SIDEWALKS, CURB, OR ASPHALT MUST BE FREE OF ORGANICS AND OTHER UNSUITABLE MATERIALS. SHOULD SUBBASE BE DEEMED UNSUITABLE BY OWNER/DEVELOPER, OR OWNER/DEVELOPER'S REPRESENTATIVE, SUBBASE IS TO BE REMOVED AND FILLED WITH APPROVED FILL MATERIAL COMPACTED AS DIRECTED BY THE GEOTECHNICAL REPORT. EARTHWORK ACTIVITIES INCLUDING, BUT NOT LIMITED TO, EXCAVATION, BACKFILL, AND COMPACTING MUST COMPLY WITH THE RECOMMENDATIONS IN THE GEOTECHNICAL REPORT AND ALL APPLICABLE REQUIREMENTS, RULES, STATUTES, LAWS, ORDINANCES AND CODES. EARTHWORK ACTIVITIES MUST COMPLY WITH THE STANDARD STATE DOT SPECIFICATIONS FOR ROADWAY CONSTRUCTION (LATEST EDITION) AND ANY AMENDMENTS OR REVISIONS THERETO.

11. ALL FILL, COMPACTION, AND BACKFILL MATERIALS REQUIRED FOR UTILITY INSTALLATION MUST BE AS PER THE RECOMMENDATIONS PROVIDED IN THE GEOTECHNICAL REPORT AND MUST BE COORDINATED WITH THE APPLICABLE UTILITY COMPANY SPECIFICATIONS. WHEN THE PROJECT DOES NOT HAVE GEOTECHNICAL RECOMMENDATIONS, FILL AND COMPACTION MUST, AT A MINIMUM, COMPLY WITH THE STATE DOT REQUIREMENTS AND SPECIFICATIONS AND CONSULTANT SHALL HAVE NO LIABILITY OR RESPONSIBILITY FOR OR AS RELATED TO FILL, COMPACTION AND BACKFILL. FURTHER, CONTRACTOR IS FULLY RESPONSIBLE FOR EARTHWORK BALANCE.

12. THE CONTRACTOR MUST COMPLY, TO THE FULLEST EXTENT, WITH THE LATEST OSHA STANDARDS AND REGULATIONS, AND/OR ANY OTHER AGENCY WITH JURISDICTION FOR EXCAVATION AND TRENCHING PROCEDURES. THE CONTRACTOR IS RESPONSIBLE FOR DETERMINING THE "MEANS AND METHODS" REQUIRED TO MEET THE INTENT AND PERFORMANCE CRITERIA OF OSHA, AS WELL AS ANY OTHER ENTITY THAT HAS JURISDICTION FOR EXCAVATION AND/OR TRENCHING PROCEDURES AND CONSULTANT SHALL HAVE NO RESPONSIBILITY FOR OR AS RELATED FOR OR AS RELATED TO EXCAVATION AND TRENCHING PROCEDURES.

13. PAVEMENT MUST BE SAW CUT IN STRAIGHT LINES, AND EXCEPT FOR EDGE OF BUTT JOINTS, MUST EXTEND TO THE FULL DEPTH OF THE EXISTING PAVEMENT. ALL DEBRIS FROM REMOVAL OPERATIONS MUST BE REMOVED FROM THE SITE AT THE TIME OF EXCAVATION. STOCKPILING OF DEBRIS WILL NOT BE PERMITTED.

14. THE TOPS OF EXISTING MANHOLES, INLET STRUCTURES, AND SANITARY CLEANOUT TOPS MUST BE ADJUSTED, AS NECESSARY, TO MATCH PROPOSED GRADES IN ACCORDANCE WITH ALL APPLICABLE STANDARDS, REQUIREMENTS, RULES, STATUTES, LAWS, ORDINANCES AND CODES.

15. DURING THE INSTALLATION OF WATER LINES, SERVICE LATERALS, SANITARY SEWER, STORM SEWER, AND ALL UTILITIES, THE CONTRACTOR MUST MAINTAIN A CONTEMPORANEOUS AND THOROUGH RECORD OF CONSTRUCTION TO IDENTIFY THE AS-INSTALLED LOCATIONS OF ALL UNDERGROUND INFRASTRUCTURE. THE CONTRACTOR MUST CAREFULLY NOTE ANY INSTALLATIONS THAT DEVIATE FROM THE INFORMATION CONTAINED IN THE UTILITY PLAN. THIS RECORD MUST BE KEPT ON A CLEAN COPY OF THE SITE PLAN, WHICH CONTRACTOR MUST PROMPTLY PROVIDE TO THE OWNER AT THE COMPLETION OF WORK.

16. WHEN THE SITE IMPROVEMENT PLANS INVOLVE MULTIPLE BUILDINGS, SOME OF WHICH MAY BE BUILT AT A LATER DATE, THE CONTRACTOR MUST EXTEND ALL LINES, INCLUDING BUT NOT LIMITED TO STORM SEWER, SANITARY SEWER, UTILITIES, AND IRRIGATION LINE, TO A POINT AT LEAST FIVE (5) FEET BEYOND THE PAVED AREAS FOR WHICH THE CONTRACTOR IS RESPONSIBLE. CONTRACTOR MUST CAP ENDS AS APPROPRIATE, MARK LOCATIONS WITH A 2X4, AND MUST NOTE THE LOCATION OF ALL OF THE ABOVE ON A CLEAN COPY OF THE SITE PLAN, WHICH CONTRACTOR MUST PROMPTLY PROVIDE TO THE OWNER UPON COMPLETION OF THE WORK.

17. THE CONTRACTOR IS FULLY RESPONSIBLE FOR VERIFICATION OF EXISTING TOPOGRAPHIC INFORMATION AND UTILITY INVERT ELEVATIONS PRIOR TO COMMENCING ANY CONSTRUCTION. CONTRACTOR MUST CONFIRM AND ENSURE 0.75% MINIMUM SLOPE AGAINST ALL ISLANDS, GUTTERS, AND CURBS; 1.0% ON ALL CONCRETE SURFACES; AND 1.5% MINIMUM ON ASPHALT (EXCEPT WHERE ADA REQUIREMENTS LIMIT GRADES), TO PREVENT PONDING. CONTRACTOR MUST IMMEDIATELY IDENTIFY, IN WRITING TO THE ENGINEER, ANY DISCREPANCIES THAT MAY OR COULD AFFECT THE PUBLIC SAFETY, HEALTH OR GENERAL WELFARE, OR PROJECT COST. IF CONTRACTOR PROCEEDS WITH CONSTRUCTION WITHOUT PROVIDING PROPER NOTIFICATION, MUST BE AT THE CONTRACTOR'S OWN RISK AND, FURTHER, CONTRACTOR SHALL INDEMNIFY, DEFEND AND HOLD HARMLESS THE DESIGN ENGINEER FOR ANY DAMAGES, COSTS, INJURIES, ATTORNEY'S FEES AND THE LIKE WHICH RESULT FROM SAME.

18. PROPOSED TOP OF CURB ELEVATIONS ARE GENERALLY 6" ABOVE EXISTING LOCAL ASPHALT GRADE UNLESS OTHERWISE NOTED. FIELD ADJUST TO CREATE A MINIMUM OF 0.75% GUTTER GRADE ALONG CURB FACE. IT IS CONTRACTOR'S OBLIGATION TO ENSURE THAT DESIGN ENGINEER APPROVES FINAL CURBING CUT SHEETS PRIOR TO INSTALLATION OF SAME.

19. REFER TO SITE PLAN FOR ADDITIONAL NOTES.

20. IN THE EVENT OF DISCREPANCIES AND/OR CONFLICTS BETWEEN PLANS OR RELATIVE TO OTHER PLANS, THE SITE PLAN WILL TAKE PRECEDENCE AND CONTROL. CONTRACTOR MUST IMMEDIATELY NOTIFY THE DESIGN ENGINEER, IN WRITING, OF ANY DISCREPANCIES AND/OR CONFLICTS.

21. CONTRACTOR IS REQUIRED TO SECURE ALL NECESSARY AND/OR REQUIRED PERMITS AND APPROVALS FOR ALL OFF SITE MATERIAL SOURCES AND DISPOSAL FACILITIES. CONTRACTOR MUST SUPPLY A COPY OF APPROVALS TO ENGINEER AND OWNER PRIOR TO INITIATING WORK.

22. WHERE RETAINING WALLS (WHETHER OR NOT THEY MEET THE JURISDICTIONAL DEFINITION) ARE IDENTIFIED ON PLANS, ELEVATIONS IDENTIFIED ARE FOR THE EXPOSED PORTION OF THE WALL. WALL FOOTINGS/FOUNDATION ELEVATIONS ARE NOT IDENTIFIED HEREIN AND ARE TO BE SET/DETERMINED BY THE CONTRACTOR BASED ON FINAL STRUCTURAL DESIGN SHOP DRAWINGS PREPARED BY THE APPROPRIATE PROFESSIONAL LICENSEE IN THE STATE WHERE THE CONSTRUCTION OCCURS.

23. STORM DRAINAGE PIPE:

    UNLESS INDICATED OTHERWISE, ALL STORM SEWER PIPE MUST BE REINFORCED CONCRETE PIPE (RCP) CLASS III FOR ALL ONSITE AND CLASS V UNDER AIRFIELD PAVEMENT ONLY WITH SILT TIGHT JOINTS. WHEN HIGH-DENSITY POLYETHYLENE PIPE (HDPE) IS CALLED FOR ON THE PLANS, IT MUST CONFORM TO AASHTO M294 AND TYPE S (SMOOTH INTERIOR WITH ANGULAR CORRUGATIONS) WITH GASKET FOR SILT TIGHT JOINT. PVC PIPE FOR ROOF DRAIN CONNECTION MUST BE SDR 26 OR SCHEDULE 40 UNLESS INDICATED OTHERWISE.

24. SANITARY SEWER PIPE MUST BE POLYVINYL CHLORIDE (PVC) SDR 35 EXCEPT WHERE INDICATED OTHERWISE. SANITARY LATERAL MUST BE PVC SCHEDULE 40 OR PVC SDR 26 UNLESS INDICATED, IN WRITING, OTHERWISE.

25. STORM AND SANITARY SEWER PIPE LENGTHS INDICATED ARE NOMINAL AND MEASURED CENTER OF INLET AND/OR MANHOLES STRUCTURE TO CENTER OF STRUCTURE.

26. STORMWATER ROOF DRAIN LOCATIONS ARE BASED ON PRELIMINARY ARCHITECTURAL PLANS. CONTRACTOR IS RESPONSIBLE TO AND FOR VERIFYING LOCATIONS OF SAME BASED ON FINAL ARCHITECTURAL PLANS.

27. SEWERS CROSSING STREAMS AND/OR LOCATION WITHIN 10 FEET OF THE STREAM EMBANKMENT, OR WHERE SITE CONDITIONS SO INDICATE, MUST BE CONSTRUCTED OF STEEL, REINFORCED CONCRETE, DUCTILE IRON OR OTHER SUITABLE MATERIAL.

28. SEWERS CONVEYING SANITARY FLOW, COMBINED SANITARY AND STORMWATER FLOW, OR INDUSTRIAL FLOW MUST BE SEPARATED FROM WATER MAINS BY A DISTANCE OF AT LEAST 10 FEET HORIZONTALLY. IF SUCH LATERAL SEPARATION IS NOT POSSIBLE, THE PIPES MUST BE IN SEPARATE TRENCHES WITH THE SEWER AT LEAST 18 INCHES BELOW THE BOTTOM OF THE WATER MAIN, OR SUCH OTHER SEPARATION AS APPROVED BY THE GOVERNMENT AGENCY WITH JURISDICTION OVER SAME.

    - WHERE APPROPRIATE SEPARATION FROM A WATER MAIN IS NOT POSSIBLE, THE SEWER MUST BE ENCASED IN CONCRETE, OR CONSTRUCTED OF DUCTILE IRON PIPE USING MECHANICAL OR SLIP-ON JOINTS FOR A DISTANCE OF AT LEAST 10 FEET ON EITHER SIDE OF THE CROSSING. IN ADDITION, ONE FULL LENGTH OF SEWER PIPE SHOULD BE LOCATED SO BOTH JOINTS WILL BE AS FAR FROM THE WATER LINE AS POSSIBLE. WHERE A WATER MAIN CROSSES UNDER A SEWER, ADEQUATE STRUCTURAL SUPPORT FOR THE SEWER MUST BE PROVIDED.

29. WATER MAIN PIPING MUST BE INSTALLED IN ACCORDANCE WITH THE REQUIREMENTS AND SPECIFICATIONS OF THE LOCAL WATER PURVEYOR. IN THE ABSENCE OF SUCH REQUIREMENTS, WATER MAIN PIPING MUST BE CEMENT-LINED DUCTILE IRON (DIP) MINIMUM CLASS 52 THICKNESS. ALL PIPE AND APPURTENANCES MUST COMPLY WITH THE APPLICABLE AWWA STANDARDS IN EFFECT AT THE TIME OF APPLICATION.

30. CONTRACTOR MUST ENSURE THAT ALL UTILITY TRENCHES LOCATED IN EXISTING PAVED ROADWAYS INCLUDING SEWER, WATER AND STORM SYSTEMS, MUST BE REPAIRED IN ACCORDANCE WITH REFERENCED MUNICIPAL, COUNTY AND/OR STATE DETAILS AS APPLICABLE. CONTRACTOR MUST COORDINATE INSPECTION AND APPROVAL OF COMPLETED WORK WITH THE AGENCY WITH JURISDICTION OVER SAME.

31. LOCATION OF PROPOSED UTILITY POLE RELOCATION IS AT THE SOLE DISCRETION OF UTILITY COMPANY.

32. CONSULTANT IS NEITHER LIABLE NOR RESPONSIBLE FOR ANY SUBSURFACE CONDITIONS AND FURTHER, SHALL HAVE NO LIABILITY FOR ANY HAZARDOUS MATERIALS, HAZARDOUS SUBSTANCES, OR POLLUTANTS ON, ABOUT OR UNDER THE PROPERTY.

BOHLER™ ENGINEERING

SITE CIVIL AND CONSULTING ENGINEERING
LAND SURVEYING
PROGRAM MANAGEMENT
LANDSCAPE ARCHITECTURE
SUSTAINABLE DESIGN
PERMITTING SERVICES
TRANSPORTATION SERVICES

THE INFORMATION, DESIGN AND CONTENT OF THIS PLAN ARE PROPRIETARY AND SHALL NOT BE COPIED OR USED FOR ANY PURPOSE WITHOUT PRIOR WRITTEN AUTHORIZATION FROM BOHLER ENGINEERING. ONLY APPROVED, SIGNED AND SEALED PLANS SHALL BE UTILIZED FOR CONSTRUCTION PURPOSES © BOHLER ENGINEERING

REVISIONS

REV	DATE	COMMENT	DRAWN BY / CHECKED BY
1	2019-08-23	CITY OF DELRAY BEACH COMMENTS	LJL / AS
2	2019-09-10	SPRAB COMMENTS	LJL / AS

THIS DRAWING IS INTENDED FOR MUNICIPAL AND/OR AGENCY REVIEW AND APPROVAL. IT IS NOT INTENDED AS A CONSTRUCTION DOCUMENT UNLESS INDICATED OTHERWISE.

811 Know what's below. Call before you dig.

ALWAYS CALL 811

It's fast. It's free. It's the law.

ISSUED FOR MUNICIPAL & AGENCY REVIEW & APPROVAL

PROJECT No.:	FLB180120
DRAWN BY:	LJL
CHECKED BY:	AS
DATE:	2019-10-25
CAD I.D.:	FLB180120-SDP-1

PROJECT:

PIERRE DELRAY PHASE 1 - SPRAB SITE PLAN PACKAGE (AKA SUNTRUST BUILDING)

FOR

CLIENT

ZYSCOVICH ARCHITECTS

PROPOSED DEVELOPMENT

302 E ATLANTIC AVE
PALM BEACH COUNTY
DELRAY BEACH, FL

BOHLER ENGINEERING

2255 GLADES ROAD, SUITE 305E
BOCA RATON, FLORIDA 33431
Phone: (561) 571-0280
Fax: (561) 571-0281
FLORIDA BUSINESS CERT. OF AUTH. No. 30780
LANDSCAPE ARCHITECT BUSINESS LIC. No LC26000551

SHEET TITLE:

GENERAL NOTES

SHEET NUMBER:

C-102

REVISION 2 - 2019-09-10

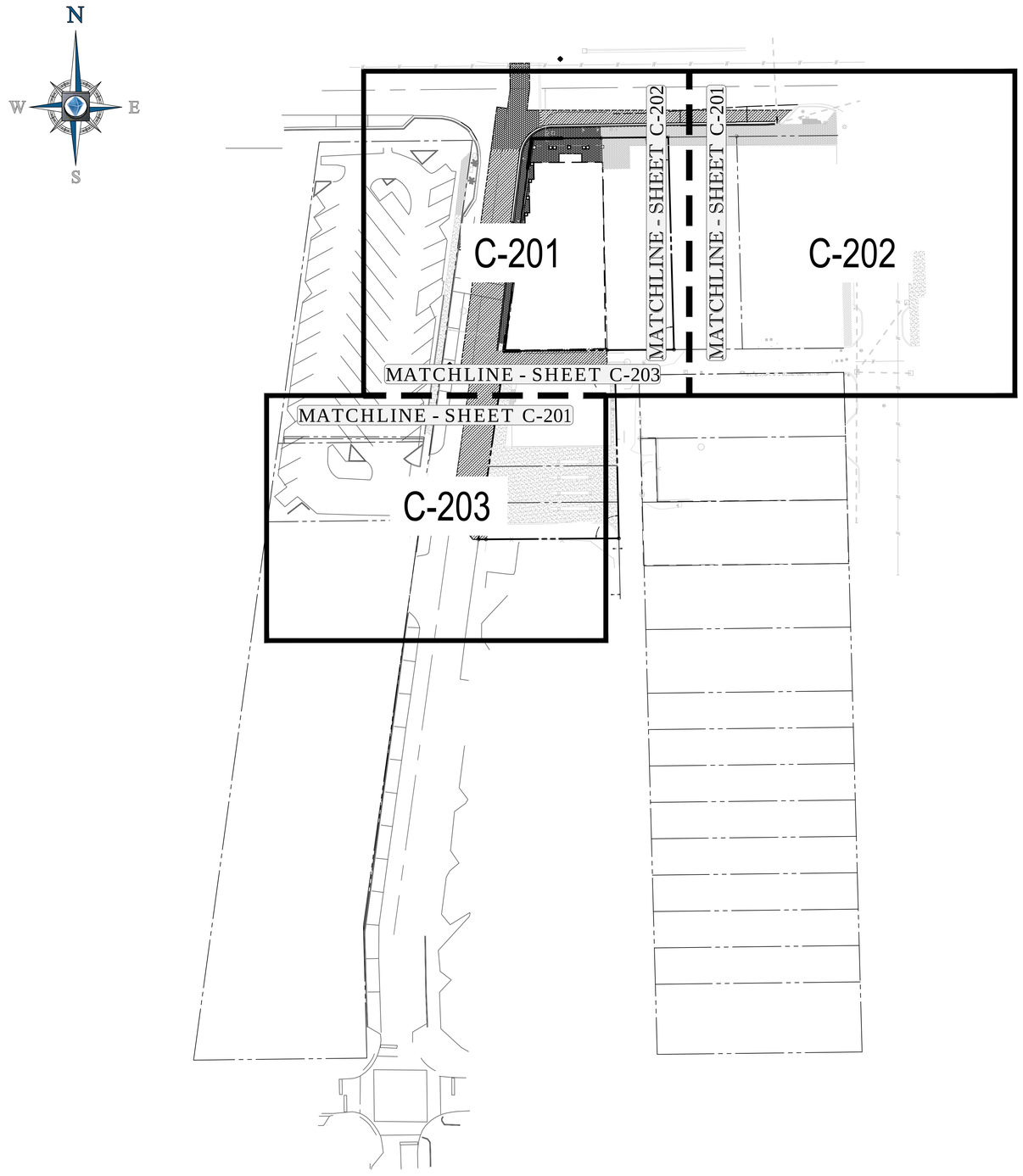

40 20 10 0 40
1"= 40'

BOHLER ENGINEERING

SITE CIVIL AND CONSULTING ENGINEERING
LAND SURVEYING
PROGRAM MANAGEMENT
LANDSCAPE ARCHITECTURE
SUSTAINABLE DESIGN
PERMITTING SERVICES
TRANSPORTATION SERVICES

THE INFORMATION, DESIGN AND CONTENT OF THIS PLAN ARE PROPRIETARY AND SHALL NOT BE COPIED OR USED FOR ANY PURPOSE WITHOUT PRIOR WRITTEN AUTHORIZATION FROM BOHLER ENGINEERING, INC. ©2019 BOHLER ENGINEERING. ALL RIGHTS ARE SHALL BE RESERVED FOR CONSTRUCTION PURPOSES.

REVISIONS

REV	DATE	COMMENT	DRAWN BY / CHECKED BY
1	2019-08-23	CITY OF DELRAY BEACH COMMENTS	LJL / AS
2	2019-09-10	SPRAB COMMENTS	LJL / AS

THIS DRAWING IS INTENDED FOR MUNICIPAL AND/OR AGENCY REVIEW AND APPROVAL. IT IS NOT INTENDED AS A CONSTRUCTION DOCUMENT UNLESS INDICATED OTHERWISE.

811 Know what's below. Call before you dig.

ALWAYS CALL 811

It's fast. It's free. It's the law.

ISSUED FOR MUNICIPAL & AGENCY REVIEW & APPROVAL

PROJECT No.:	FLB180120
DRAWN BY:	LJL
CHECKED BY:	AS
DATE:	2019-10-25
CAD I.D.:	FLB180120-DMP-1

PROJECT:

PIERRE DELRAY PHASE 1 - SPRAB SITE PLAN PACKAGE (AKA SUNTRUST BUILDING)

FOR

CLIENT

ZYSCOVICH ARCHITECTS

PROPOSED DEVELOPMENT

302 E ATLANTIC AVE
PALM BEACH COUNTY
DELRAY BEACH, FL

BOHLER ENGINEERING
2255 GLADES ROAD, SUITE 305E
BOCA RATON, FLORIDA 33431
Phone: (561) 571-0280
Fax: (561) 571-0281
FLORIDA BUSINESS CERT. OF AUTH. No. 30780
LANDSCAPE ARCHITECT BUSINESS LIC. No LC26000551

SHEET TITLE:

DEMOLITION PLAN KEY SHEET

SHEET NUMBER:

C-200

REVISION 2 - 2019-09-10

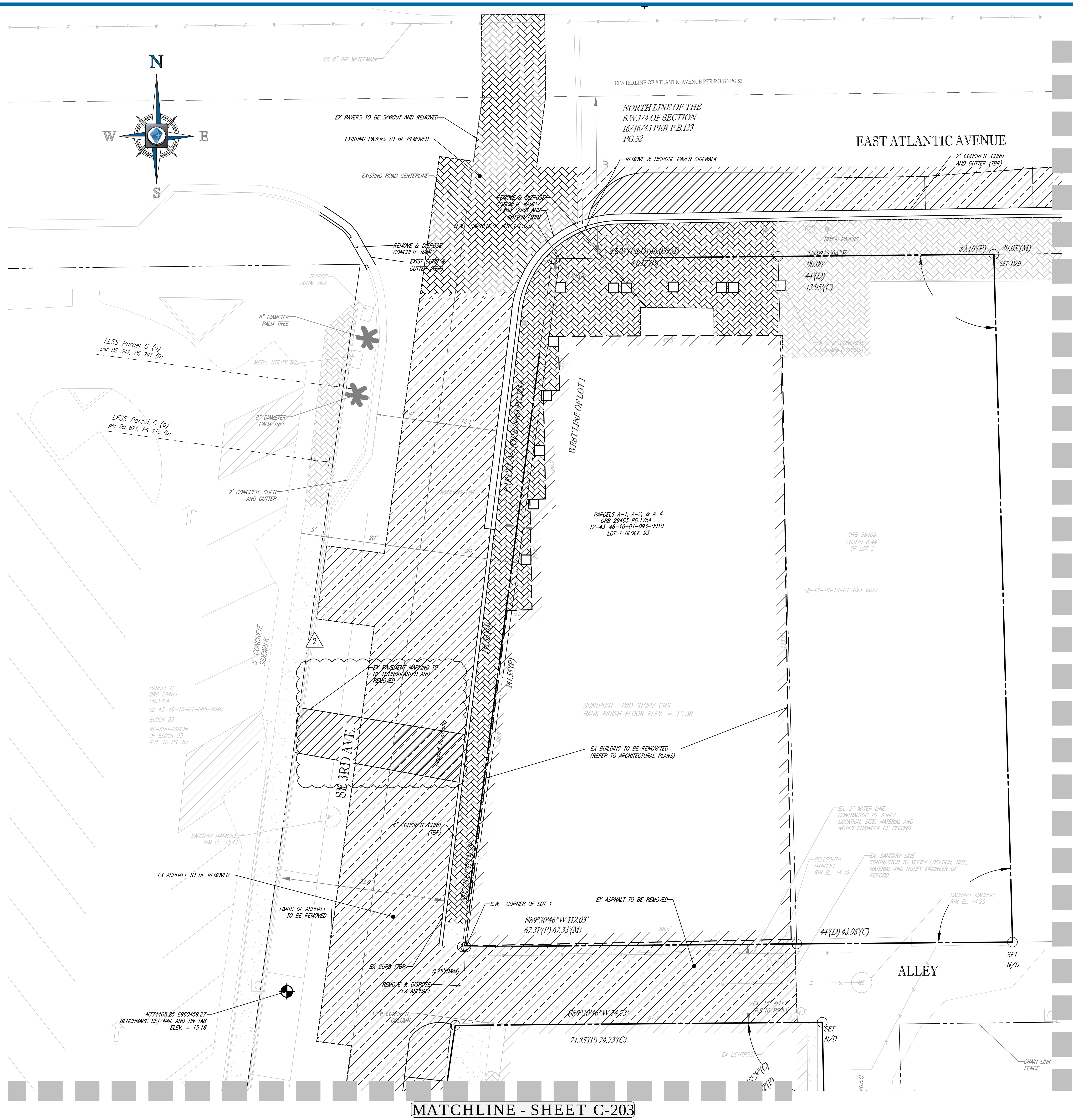

LEGEND:

- EX PROPERTY BOUNDARY LINES
- PROP PROPERTY BOUNDARY LINES
- EX STORM STRUCTURES TO BE REMOVED
- (TBR) TO BE REMOVED
- EX PAVERS TO BE REMOVED
- EX SURFACE TO BE REMOVED
- EX STORM PIPE TO BE REMOVED
- EX SPOT GRADE
- EX POLE TO BE REMOVED
- EX POLE TO REMAIN
- EX SANITARY MANHOLE
- EX SANITARY LINE
- EX STORM SEWER PIPE
- EX WATER LINE
- EX OVERHEAD WIRE
- EX SANITARY LINE TO BE REMOVED
- EX WATER LINE TO BE REMOVED
- EX OVERHEAD WIRE TO BE REMOVED
- EX LIGHT POLE TO BE REMOVED
- EX LIGHT POLE TO REMAIN
- EX CATCH BASIN TO REMAIN
- EX CLEAN OUT TO BE REMOVED
- EX TREES TO BE REMOVED

DEMOLITION NOTES:

1. BOHLER ENGINEERING FL, LLC IS NOT RESPONSIBLE FOR JOB SITE SAFETY OR SUPERVISION. CONTRACTOR IS TO PROCEED WITH THE DEMOLITION IN A SYSTEMATIC AND SAFE MANNER, FOLLOWING ALL THE OSHA REQUIREMENTS, TO ENSURE PUBLIC AND CONTRACTOR SAFETY.
2. ALL DEMOLITION ACTIVITIES ARE TO BE PERFORMED IN ACCORDANCE WITH THESE PLANS AND SPECIFICATIONS AS WELL AS ALL FEDERAL, STATE AND LOCAL REGULATIONS. ANY DISCREPANCIES OR DEVIATIONS SHALL BE IDENTIFIED BY THE CONTRACTOR TO BOHLER ENGINEERING FL, LLC IN WRITING FOR RESOLUTION PRIOR TO INITIATION OF SITE ACTIVITY.
3. PRIOR TO STARTING ANY DEMOLITION CONTRACTOR IS RESPONSIBLE FOR/TO:
   - A. THE CONTRACTOR SHALL OBTAIN A SUNSHINE STATE ONE CALL LOCATION CERTIFICATION PRIOR TO ANY EXCAVATION OR DEMOLITION. THE NUMBER IS 1-800-432-4770.
   - B. ENSURING COPIES OF ALL PERMITS AND APPROVALS MUST BE MAINTAINED ON SITE AND AVAILABLE FOR REVIEW.
   - C. INSTALLING THE REQUIRED SOIL EROSION AND SEDIMENT CONTROL MEASURES PRIOR TO SITE DISTURBANCE.
   - D. LOCATE/CAP ALL UTILITIES AND SERVICES, INCLUDING BUT NOT LIMITED TO GAS, WATER, ELECTRIC, SANITARY AND STORM SEWER, TELEPHONE, CABLE, FIBER OPTIC CABLE, ETC. WITHIN THE LIMITS OF DISTURBANCE.
   - E. PROTECTING AND MAINTAINING IN OPERATION, ALL ACTIVE SYSTEM THAT ARE NOT BEING REMOVED DURING ALL DEMOLITION ACTIVITIES.
   - F. FAMILIARIZING THEMSELVES WITH THE APPLICABLE UTILITY SERVICE PROVIDER AND IS RESPONSIBLE FOR ALL COORDINATION REGARDING UTILITY DEMOLITION REQUIRED FOR THE PROJECT. THE CONTRACTOR SHALL PROVIDE THE OWNER WRITTEN NOTIFICATION THAT THE EXISTING UTILITIES AND SERVICES HAVE BEEN TERMINATED AND ABANDONED IN ACCORDANCE WITH JURISDICTION AND UTILITY COMPANY REQUIREMENTS.
   - G. COORDINATION WITH UTILITY COMPANIES REGARDING WORKING "OFF-PEAK" HOURS OR ON WEEKENDS AS MAY BE REQUIRED TO MINIMIZE THE IMPACT ON THE AFFECTED PARTIES.
   - H. A COMPLETE INSPECTION OF CONTAMINANTS BY A LICENSED ENVIRONMENTAL TESTING AGENCY, OF ALL BUILDINGS AND/OR STRUCTURES TO BE REMOVED. SAME SHALL BE PERFORMED IN ACCORDANCE WITH ALL APPLICABLE LOCAL, STATE, AND FEDERAL ENVIRONMENTAL REGULATIONS. ANY/ALL CONTAMINANTS SHALL BE REMOVED AND DISPOSED OF BY A FEDERALLY LICENSED CONTRACTOR IN ACCORDANCE WITH FEDERAL, STATE, AND LOCAL REGULATIONS. ALL ENVIRONMENTAL WORK INCLUDING HAZARDOUS MATERIAL, SOILS, ASBESTOS, OR OTHER REFERENCED OR IMPLIED HEREIN IS THE SOLE RESPONSIBILITY OF THE OWNER'S ENVIRONMENTAL CONSULTANT.
4. THE CONTRACTOR SHALL PROVIDE ALL THE "MEANS AND METHODS" NECESSARY TO PREVENT MOVEMENT, SETTLEMENT, OR COLLAPSE OF EXISTING STRUCTURES, AND ANY OTHER IMPROVEMENTS THAT ARE REMAINING ON OR OFF SITE. THE DEMOLITION CONTRACTOR IS RESPONSIBLE FOR ALL REPAIRS OF DAMAGE TO ALL ITEMS THAT ARE TO REMAIN AS A RESULT OF HIS ACTIVITIES. ALL REPAIRS SHALL USE NEW MATERIAL. THE REPAIRS SHALL RESTORE THE ITEM TO THE PRE-DEMOLITION CONDITION.
5. IN THE ABSENCE OF SPECIFICATIONS, THE CONTRACTOR SHALL PERFORM EARTH MOVEMENT ACTIVITIES, DEMOLITION AND REMOVAL OF ALL FOUNDATION WALLS, FOOTINGS, AND OTHER MATERIALS WITHIN THE LIMITS OF DISTURBANCE IN ACCORDANCE WITH DIRECTION BY OWNER'S STRUCTURAL OR GEOTECHNICAL ENGINEER.
6. EXPLOSIVES SHALL NOT BE USED WITHOUT PRIOR WRITTEN CONSENT OF BOTH THE OWNER AND APPLICABLE GOVERNMENTAL AUTHORITIES. ALL THE REQUIRED PERMITS AND EXPLOSIVE CONTROL MEASURES THAT ARE REQUIRED BY THE FEDERAL, STATE, AND LOCAL GOVERNMENTS SHALL BE IN PLACE PRIOR TO STARTING AN EXPLOSIVE PROGRAM. THE CONTRACTOR IS ALSO RESPONSIBLE FOR ALL INSPECTION AND SEISMIC VIBRATION TESTING THAT IS REQUIRED TO MONITOR THE EFFECTS ON ALL LOCAL STRUCTURES.
7. CONTRACTOR SHALL PROVIDE TRAFFIC CONTROL AND GENERALLY ACCEPTED SAFE PRACTICES IN CONFORMANCE WITH: THE "MANUAL ON UNIFORM TRAFFIC CONTROL," AS WELL AS FEDERAL, STATE, AND LOCAL REGULATIONS WHEN DEMOLITION RELATED ACTIVITIES IMPACT ROADWAYS OR ROADWAY RIGHTS - OF - WAY.
8. CONDUCT DEMOLITION ACTIVITIES IN SUCH A MANNER TO ENSURE MINIMUM INTERFERENCE WITH ROADS, STREETS, SIDEWALKS, WALKWAYS, AND OTHER ADJACENT FACILITIES. STREET CLOSURE PERMITS MUST BE RECEIVED FROM THE APPROPRIATE GOVERNMENTAL AUTHORITY.
9. DEMOLITION ACTIVITIES AND EQUIPMENT SHALL NOT USE AREAS OUTSIDE THE DEFINED PROPERTY LINE WITHOUT WRITTEN PERMISSION OF THE OWNER, AND/OR APPROPRIATE GOVERNMENT AGENCY.
10. USE DUST CONTROL MEASURES TO LIMIT AIRBORNE DUST AND DIRT RISING AND SCATTERING IN THE AIR IN ACCORDANCE WITH FEDERAL, STATE, AND/OR LOCAL STANDARDS. AFTER THE DEMOLITION IS COMPLETE, ADJACENT STRUCTURES AND IMPROVEMENTS SHALL BE CLEANED OF ALL DUST AND DEBRIS CAUSED BY THE DEMOLITION OPERATIONS. THE CONTRACTOR IS RESPONSIBLE FOR RETURNING ALL ADJACENT AREAS TO THEIR "PRE-DEMOLITION" CONDITION.
11. CONTRACTOR IS RESPONSIBLE TO SAFEGUARD SITE AS NECESSARY TO PERFORM THE DEMOLITION IN SUCH A MANNER AS TO PREVENT THE ENTRY OF UNAUTHORIZED PERSONS AT ANY TIME.
12. THIS DEMOLITION PLAN IS INTENDED TO IDENTIFY THOSE EXISTING ITEMS/CONDITIONS WHICH ARE TO BE REMOVED. IT IS NOT INTENDED TO PROVIDE DIRECTION OTHER THAN THAT ALL METHODS AND MEANS ARE TO BE IN ACCORDANCE WITH STATE, FEDERAL, LOCAL, AND JURISDICTIONAL REQUIREMENTS. THE CONTRACTOR SHALL BE RESPONSIBLE FOR ALL OSHA AND OTHER SAFETY PRECAUTIONS NECESSARY TO PROVIDE A SAFE WORK SITE.
13. DEBRIS SHALL NOT BE BURIED ON THE SUBJECT SITE. ALL DEMOLITION WASTES AND DEBRIS (SOLID WASTE) SHALL BE DISPOSED OF IN ACCORDANCE WITH ALL TOWN, COUNTY, STATE, AND FEDERAL LAWS AND APPLICABLE CODES.
14. CONTRACTOR IS RESPONSIBLE FOR FIELD VERIFYING ALL EXISTING SITE IMPROVEMENTS AND UTILITIES. ALL DISCREPANCIES SHALL BE IDENTIFIED TO THE ENGINEER IN WRITING.
15. ALL EXISTING UTILITIES BEING REMOVED SHALL BE DONE SO BY THE CONTRACTOR IN ACCORDANCE WITH STATE AND LOCAL REGULATIONS.
16. CONTRACTOR SHALL ENSURE PROPER EROSION CONTROL IS PROVIDED THROUGHOUT THE ENTIRE DURATION OF THE PROJECT.
17. ALL EXISTING FEATURES (I.E. EXISTING BUILDING FOUNDATIONS, UTILITIES) SHALL BE REMOVED FROM AND WITHIN TEN (10) FEET OF THE PROPOSED BUILDING FOUNDATION AND LOADING DOCK RETAINING WALL.
18. ALL EXISTING UTILITIES TO BE ABANDONED SHALL BE REMOVED IF THE DIAMETER IS GREATER THAN 12 INCHES OR GROUTED FULL IF LEFT IN PLACE. ALL DISCONNECTIONS AND CAPPING OF EXISTING UTILITIES MUST BE PREFORMED PER THE REQUIREMENTS OF THE AUTHORITIES HAVING JURISDICTION.
19. THE CONTRACTOR SHALL BE RESPONSIBLE FOR ALL PHASING OF DEMOLITION WHEN THAT DEMOLITION MAY IMPACT TRAFFIC, ACCESS OR UTILITIES TO NEIGHBORS, OR FACILITIES TO REMAIN AND OTHER SURROUNDING INFRASTRUCTURE OR FACILITIES.
20. AND REMAINING SIDEWALK NOT BEING DEMOLISHED SHOULD BE REPAIRED TO LIKE NEW CONDITION.

10 5 2.5 0 10
1"= 10'

BOHLER ENGINEERING

SITE CIVIL AND CONSULTING ENGINEERING
LAND SURVEYING
PROGRAM MANAGEMENT
LANDSCAPE ARCHITECTURE
SUSTAINABLE DESIGN
PERMITTING SERVICES
TRANSPORTATION SERVICES

THE INFORMATION, DESIGN AND CONTENT OF THIS PLAN ARE PROPRIETARY AND SHALL NOT BE COPIED OR USED FOR ANY PURPOSE WITHOUT PRIOR WRITTEN AUTHORIZATION FROM BOHLER ENGINEERING. ONLY APPROVED, SIGNED AND SEALED PLANS SHALL BE UTILIZED FOR CONSTRUCTION PURPOSES.
© BOHLER ENGINEERING

REVISIONS

REV	DATE	COMMENT	DRAWN BY / CHECKED BY
1	2019-08-23	CITY OF DELRAY BEACH COMMENTS	LJL / AS
2	2019-09-10	SPRAB COMMENTS	LJL / AS

THIS DRAWING IS INTENDED FOR MUNICIPAL AND/OR AGENCY REVIEW AND APPROVAL. IT IS NOT INTENDED AS A CONSTRUCTION DOCUMENT UNLESS INDICATED OTHERWISE.

811 Know what's below. Call before you dig.
ALWAYS CALL 811
It's fast. It's free. It's the law.

ISSUED FOR MUNICIPAL & AGENCY REVIEW & APPROVAL

PROJECT No.: FLB180120
DRAWN BY: LJL
CHECKED BY: AS
DATE: 2019-10-25
CAD I.D.: FLB180120-DMP-1

PROJECT:
PIERRE DELRAY PHASE 1 - SPRAB SITE PLAN PACKAGE (AKA SUNTRUST BUILDING)

FOR

CLIENT
ZYSCOVICH ARCHITECTS

PROPOSED DEVELOPMENT
302 E ATLANTIC AVE
PALM BEACH COUNTY
DELRAY BEACH, FL

BOHLER ENGINEERING
2255 GLADES ROAD, SUITE 305E
BOCA RATON, FLORIDA 33431
Phone: (561) 571-0280
Fax: (561) 571-0281
FLORIDA BUSINESS CERT. OF AUTH. No. 30780
LANDSCAPE ARCHITECT BUSINESS LIC. No LC26000551

SHEET TITLE:
DEMOLITION PLAN

SHEET NUMBER:
C-201

REVISION 2 - 2019-09-10

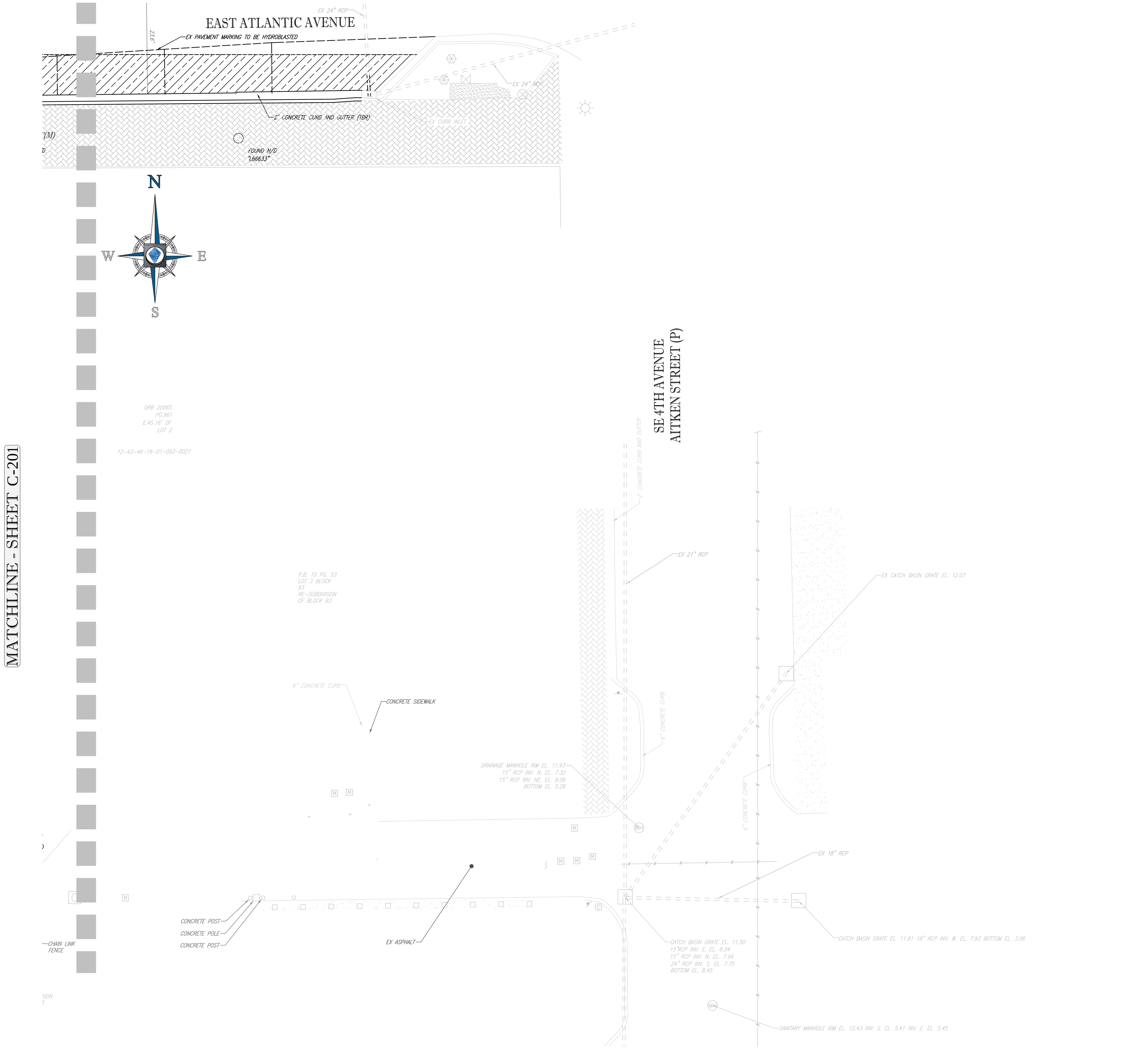

LEGEND:

- EX PROPERTY BOUNDARY LINES
- PROP PROPERTY BOUNDARY LINES
- EX STORM STRUCTURES TO BE REMOVED
- (TBR) TO BE REMOVED
- EX PAVERS TO BE REMOVED
- EX SURFACE TO BE REMOVED
- EX STORM PIPE TO BE REMOVED
- EX SPOT GRADE
- EX POLE TO BE REMOVED
- EX POLE TO REMAIN
- EX SANITARY MANHOLE
- EX SANITARY LINE
- EX STORM SEWER PIPE
- EX WATER LINE
- EX OVERHEAD WIRE
- EX SANITARY LINE TO BE REMOVED
- EX WATER LINE TO BE REMOVED
- EX OVERHEAD WIRE TO BE REMOVED
- LP EX LIGHT POLE TO BE REMOVED
- LP EX LIGHT POLE TO REMAIN
- EX CATCH BASIN TO REMAIN
- C/O EX CLEAN OUT TO BE REMOVED
- EX TREES TO BE REMOVED

DEMOLITION NOTES:

1. BOHLER ENGINEERING FL, LLC IS NOT RESPONSIBLE FOR JOB SITE SAFETY OR SUPERVISION. CONTRACTOR IS TO PROCEED WITH THE DEMOLITION IN A SYSTEMATIC AND SAFE MANNER, FOLLOWING ALL THE OSHA REQUIREMENTS, TO ENSURE PUBLIC AND CONTRACTOR SAFETY.
2. ALL DEMOLITION ACTIVITIES ARE TO BE PERFORMED IN ACCORDANCE WITH THESE PLANS AND SPECIFICATIONS AS WELL AS ALL FEDERAL, STATE AND LOCAL REGULATIONS. ANY DISCREPANCIES OR DEVIATIONS SHALL BE IDENTIFIED BY THE CONTRACTOR TO BOHLER ENGINEERING FL, LLC IN WRITING FOR RESOLUTION PRIOR TO INITIATION OF SITE ACTIVITY.
3. PRIOR TO STARTING ANY DEMOLITION CONTRACTOR IS RESPONSIBLE FOR/TO:
   A. THE CONTRACTOR SHALL OBTAIN A SUNSHINE STATE ONE CALL LOCATION CERTIFICATION PRIOR TO ANY EXCAVATION OR DEMOLITION. THE NUMBER IS 1-800-432-4770.
   B. ENSURING COPIES OF ALL PERMITS AND APPROVALS MUST BE MAINTAINED ON SITE AND AVAILABLE FOR REVIEW.
   C. INSTALLING THE REQUIRED SOIL EROSION AND SEDIMENT CONTROL MEASURES PRIOR TO SITE DISTURBANCE.
   D. LOCATE/CAP ALL UTILITIES AND SERVICES, INCLUDING BUT NOT LIMITED TO GAS, WATER, ELECTRIC, SANITARY AND STORM SEWER, TELEPHONE, CABLE, FIBER OPTIC CABLE, ETC. WITHIN THE LIMITS OF DISTURBANCE.
   E. PROTECTING AND MAINTAINING IN OPERATION, ALL ACTIVE SYSTEM THAT ARE NOT BEING REMOVED DURING ALL DEMOLITION ACTIVITIES.
   F. FAMILIARIZING THEMSELVES WITH THE APPLICABLE UTILITY SERVICE PROVIDER AND IS RESPONSIBLE FOR ALL COORDINATION REGARDING UTILITY DEMOLITION REQUIRED FOR THE PROJECT. THE CONTRACTOR SHALL PROVIDE THE OWNER WRITTEN NOTIFICATION THAT THE EXISTING UTILITIES AND SERVICES HAVE BEEN TERMINATED AND ABANDONED IN ACCORDANCE WITH JURISDICTION AND UTILITY COMPANY REQUIREMENTS.
   G. COORDINATION WITH UTILITY COMPANIES REGARDING WORKING "OFF-PEAK" HOURS OR ON WEEKENDS AS MAY BE REQUIRED TO MINIMIZE THE IMPACT ON THE AFFECTED PARTIES.
   H. A COMPLETE INSPECTION OF CONTAMINANTS BY A LICENSED ENVIRONMENTAL TESTING AGENCY, OF ALL BUILDINGS AND/OR STRUCTURES TO BE REMOVED. SAME SHALL BE PERFORMED IN ACCORDANCE WITH ALL APPLICABLE LOCAL, STATE, AND FEDERAL ENVIRONMENTAL REGULATIONS. ANY/ALL CONTAMINANTS SHALL BE REMOVED AND DISPOSED OF BY A FEDERALLY LICENSED CONTRACTOR IN ACCORDANCE WITH FEDERAL, STATE, AND LOCAL REGULATIONS. ALL ENVIRONMENTAL WORK INCLUDING HAZARDOUS MATERIAL, SOILS, ASBESTOS, OR OTHER REFERENCED OR IMPLIED HEREIN IS THE SOLE RESPONSIBILITY OF THE OWNER'S ENVIRONMENTAL CONSULTANT.
4. THE CONTRACTOR SHALL PROVIDE ALL THE "MEANS AND METHODS" NECESSARY TO PREVENT MOVEMENT, SETTLEMENT, OR COLLAPSE OF EXISTING STRUCTURES, AND ANY OTHER IMPROVEMENTS THAT ARE REMAINING ON OR OFF SITE. THE DEMOLITION CONTRACTOR IS RESPONSIBLE FOR ALL REPAIRS OF DAMAGE TO ALL ITEMS THAT ARE TO REMAIN AS A RESULT OF HIS ACTIVITIES. ALL REPAIRS SHALL USE NEW MATERIAL. THE REPAIRS SHALL RESTORE THE ITEM TO THE PRE-DEMOLITION CONDITION.
5. IN THE ABSENCE OF SPECIFICATIONS, THE CONTRACTOR SHALL PERFORM EARTH MOVEMENT ACTIVITIES, DEMOLITION AND REMOVAL OF ALL FOUNDATION WALLS, FOOTINGS, AND OTHER MATERIALS WITHIN THE LIMITS OF DISTURBANCE IN ACCORDANCE WITH DIRECTION BY OWNER'S STRUCTURAL OR GEOTECHNICAL ENGINEER.
6. EXPLOSIVES SHALL NOT BE USED WITHOUT PRIOR WRITTEN CONSENT OF BOTH THE OWNER AND APPLICABLE GOVERNMENTAL AUTHORITIES. ALL THE REQUIRED PERMITS AND EXPLOSIVE CONTROL MEASURES THAT ARE REQUIRED BY THE FEDERAL, STATE, AND LOCAL GOVERNMENTS SHALL BE IN PLACE PRIOR TO STARTING AN EXPLOSIVE PROGRAM. THE CONTRACTOR IS ALSO RESPONSIBLE FOR ALL INSPECTION AND SEISMIC VIBRATION TESTING THAT IS REQUIRED TO MONITOR THE EFFECTS ON ALL LOCAL STRUCTURES.
7. CONTRACTOR SHALL PROVIDE TRAFFIC CONTROL AND GENERALLY ACCEPTED SAFE PRACTICES IN CONFORMANCE WITH: THE "MANUAL ON UNIFORM TRAFFIC CONTROL," AS WELL AS FEDERAL, STATE, AND LOCAL REGULATIONS WHEN DEMOLITION RELATED ACTIVITIES IMPACT ROADWAYS OR ROADWAY RIGHTS - OF - WAY.
8. CONDUCT DEMOLITION ACTIVITIES IN SUCH A MANNER TO ENSURE MINIMUM INTERFERENCE WITH ROADS, STREETS, SIDEWALKS, WALKWAYS, AND OTHER ADJACENT FACILITIES. STREET CLOSURE PERMITS MUST BE RECEIVED FROM THE APPROPRIATE GOVERNMENTAL AUTHORITY.
9. DEMOLITION ACTIVITIES AND EQUIPMENT SHALL NOT USE AREAS OUTSIDE THE DEFINED PROPERTY LINE WITHOUT WRITTEN PERMISSION OF THE OWNER, AND/OR APPROPRIATE GOVERNMENT AGENCY.
10. USE DUST CONTROL MEASURES TO LIMIT AIRBORNE DUST AND DIRT RISING AND SCATTERING IN THE AIR IN ACCORDANCE WITH FEDERAL, STATE, AND/OR LOCAL STANDARDS. AFTER THE DEMOLITION IS COMPLETE, ADJACENT STRUCTURES AND IMPROVEMENTS SHALL BE CLEANED OF ALL DUST AND DEBRIS CAUSED BY THE DEMOLITION OPERATIONS. THE CONTRACTOR IS RESPONSIBLE FOR RETURNING ALL ADJACENT AREAS TO THEIR "PRE-DEMOLITION" CONDITION.
11. CONTRACTOR IS RESPONSIBLE TO SAFEGUARD SITE AS NECESSARY TO PERFORM THE DEMOLITION IN SUCH A MANNER AS TO PREVENT THE ENTRY OF UNAUTHORIZED PERSONS AT ANY TIME.
12. THIS DEMOLITION PLAN IS INTENDED TO IDENTIFY THOSE EXISTING ITEMS/CONDITIONS WHICH ARE TO BE REMOVED. IT IS NOT INTENDED TO PROVIDE DIRECTION OTHER THAN THAT ALL METHODS AND MEANS ARE TO BE IN ACCORDANCE WITH STATE, FEDERAL, LOCAL, AND JURISDICTIONAL REQUIREMENTS. THE CONTRACTOR SHALL BE RESPONSIBLE FOR ALL OSHA AND OTHER SAFETY PRECAUTIONS NECESSARY TO PROVIDE A SAFE WORK SITE.
13. DEBRIS SHALL NOT BE BURIED ON THE SUBJECT SITE. ALL DEMOLITION WASTES AND DEBRIS (SOLID WASTE) SHALL BE DISPOSED OF IN ACCORDANCE WITH ALL TOWN, COUNTY, STATE, AND FEDERAL LAWS AND APPLICABLE CODES.
14. CONTRACTOR IS RESPONSIBLE FOR FIELD VERIFYING ALL EXISTING SITE IMPROVEMENTS AND UTILITIES. ALL DISCREPANCIES SHALL BE IDENTIFIED TO THE ENGINEER IN WRITING.
15. ALL EXISTING UTILITIES BEING REMOVED SHALL BE DONE SO BY THE CONTRACTOR IN ACCORDANCE WITH STATE AND LOCAL REGULATIONS.
16. CONTRACTOR SHALL ENSURE PROPER EROSION CONTROL IS PROVIDED THROUGHOUT THE ENTIRE DURATION OF THE PROJECT.
17. ALL EXISTING FEATURES (I.E. EXISTING BUILDING FOUNDATIONS, UTILITIES) SHALL BE REMOVED FROM AND WITHIN TEN (10) FEET OF THE PROPOSED BUILDING FOUNDATION AND LOADING DOCK RETAINING WALL.
18. ALL EXISTING UTILITIES TO BE ABANDONED SHALL BE REMOVED IF THE DIAMETER IS GREATER THAN 12 INCHES OR GROUTED FULL IF LEFT IN PLACE. ALL DISCONNECTIONS AND CAPPING OF EXISTING UTILITIES MUST BE PREFORMED PER THE REQUIREMENTS OF THE AUTHORITIES HAVING JURISDICTION.
19. THE CONTRACTOR SHALL BE RESPONSIBLE FOR ALL PHASING OF DEMOLITION WHEN THAT DEMOLITION MAY IMPACT TRAFFIC, ACCESS OR UTILITIES TO NEIGHBORS, OR FACILITIES TO REMAIN AND OTHER SURROUNDING INFRASTRUCTURE OR FACILITIES.
20. AND REMAINING SIDEWALK NOT BEING DEMOLISHED SHOULD BE REPAIRED TO LIKE NEW CONDITION.

10 5 2.5 0 10

1"= 10'

BOHLER ENGINEERING
SITE CIVIL AND CONSULTING ENGINEERING
LAND SURVEYING
PROGRAM MANAGEMENT
LANDSCAPE ARCHITECTURE
SUSTAINABLE DESIGN
PERMITTING SERVICES
TRANSPORTATION SERVICES

THE INFORMATION, DESIGN AND CONTENT OF THIS PLAN ARE PROPRIETARY AND SHALL NOT BE COPIED OR USED FOR ANY PURPOSE WITHOUT PRIOR WRITTEN AUTHORIZATION FROM BOHLER ENGINEERING. ONLY APPROVED, SIGNED AND SEALED PLANS SHALL BE UTILIZED FOR CONSTRUCTION PURPOSES
© BOHLER ENGINEERING

REVISIONS

REV	DATE	COMMENT	DRAWN BY / CHECKED BY
1	2019-08-23	CITY OF DELRAY BEACH COMMENTS	LJL / AS
2	2019-09-10	SPRAB COMMENTS	LJL / AS

THIS DRAWING IS INTENDED FOR MUNICIPAL AND/OR AGENCY REVIEW AND APPROVAL. IT IS NOT INTENDED AS A CONSTRUCTION DOCUMENT UNLESS INDICATED OTHERWISE.

811 Know what's below. Call before you dig.
ALWAYS CALL 811
It's fast. It's free. It's the law.

ISSUED FOR MUNICIPAL & AGENCY REVIEW & APPROVAL

PROJECT No.:	FLB180120
DRAWN BY:	LJL
CHECKED BY:	AS
DATE:	2019-10-25
CAD I.D.:	FLB180120-DMP-1

PROJECT:

PIERRE DELRAY PHASE 1 - SPRAB SITE PLAN PACKAGE (AKA SUNTRUST BUILDING)

FOR

CLIENT

ZYSCOVICH ARCHITECTS

PROPOSED DEVELOPMENT

302 E ATLANTIC AVE
PALM BEACH COUNTY
DELRAY BEACH, FL

BOHLER ENGINEERING
2255 GLADES ROAD, SUITE 305E
BOCA RATON, FLORIDA 33431
Phone: (561) 571-0280
Fax: (561) 571-0281
FLORIDA BUSINESS CERT. OF AUTH. No. 30780
LANDSCAPE ARCHITECT BUSINESS LIC. No LC26000551

SHEET TITLE:

DEMOLITION PLAN

SHEET NUMBER:

C-202

REVISION 2 - 2019-09-10

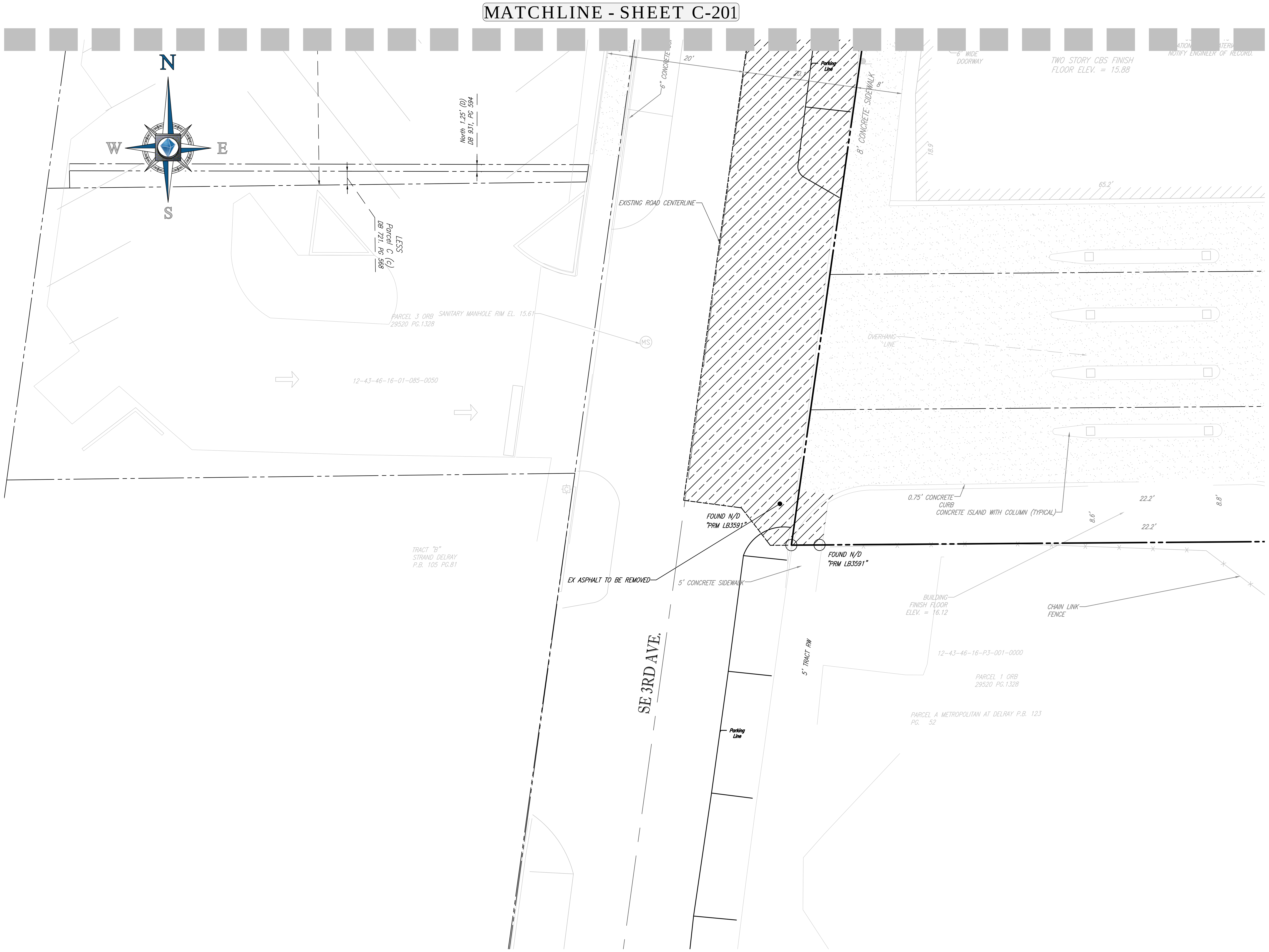

10 5 2.5 0 10

1"= 10'

LEGEND:

- EX PROPERTY BOUNDARY LINES
- PROP PROPERTY BOUNDARY LINES
- EX STORM STRUCTURES TO BE REMOVED
- (TBR) TO BE REMOVED
- EX PAVERS TO BE REMOVED
- EX SURFACE TO BE REMOVED
- EX STORM PIPE TO BE REMOVED
- EX SPOT GRADE
- EX POLE TO BE REMOVED
- EX POLE TO REMAIN
- EX SANITARY MANHOLE
- EX SANITARY LINE
- EX STORM SEWER PIPE
- EX WATER LINE
- EX OVERHEAD WIRE
- EX SANITARY LINE TO BE REMOVED
- EX WATER LINE TO BE REMOVED
- EX OVERHEAD WIRE TO BE REMOVED
- EX LIGHT POLE TO BE REMOVED
- EX LIGHT POLE TO REMAIN
- EX CATCH BASIN TO REMAIN
- EX CLEAN OUT TO BE REMOVED
- EX TREES TO BE REMOVED

DEMOLITION NOTES:

1. BOHLER ENGINEERING FL, LLC IS NOT RESPONSIBLE FOR JOB SITE SAFETY OR SUPERVISION. CONTRACTOR IS TO PROCEED WITH THE DEMOLITION IN A SYSTEMATIC AND SAFE MANNER, FOLLOWING ALL THE OSHA REQUIREMENTS, TO ENSURE PUBLIC AND CONTRACTOR SAFETY.

2. ALL DEMOLITION ACTIVITIES ARE TO BE PERFORMED IN ACCORDANCE WITH THESE PLANS AND SPECIFICATIONS AS WELL AS ALL FEDERAL, STATE AND LOCAL REGULATIONS. ANY DISCREPANCIES OR DEVIATIONS SHALL BE IDENTIFIED BY THE CONTRACTOR TO BOHLER ENGINEERING FL, LLC IN WRITING FOR RESOLUTION PRIOR TO INITIATION OF SITE ACTIVITY.

3. PRIOR TO STARTING ANY DEMOLITION CONTRACTOR IS RESPONSIBLE FOR/TO:
   A. THE CONTRACTOR SHALL OBTAIN A SUNSHINE STATE ONE CALL LOCATION CERTIFICATION PRIOR TO ANY EXCAVATION OR DEMOLITION. THE NUMBER IS 1-800-432-4770.
   B. ENSURING COPIES OF ALL PERMITS AND APPROVALS MUST BE MAINTAINED ON SITE AND AVAILABLE FOR REVIEW.
   C. INSTALLING THE REQUIRED SOIL EROSION AND SEDIMENT CONTROL MEASURES PRIOR TO SITE DISTURBANCE.
   D. LOCATE/CAP ALL UTILITIES AND SERVICES, INCLUDING BUT NOT LIMITED TO GAS, WATER, ELECTRIC, SANITARY AND STORM SEWER, TELEPHONE, CABLE, FIBER OPTIC CABLE, ETC. WITHIN THE LIMITS OF DISTURBANCE.
   E. PROTECTING AND MAINTAINING IN OPERATION, ALL ACTIVE SYSTEM THAT ARE NOT BEING REMOVED DURING ALL DEMOLITION ACTIVITIES.
   F. FAMILIARIZING THEMSELVES WITH THE APPLICABLE UTILITY SERVICE PROVIDER AND IS RESPONSIBLE FOR ALL COORDINATION REGARDING UTILITY DEMOLITION REQUIRED FOR THE PROJECT. THE CONTRACTOR SHALL PROVIDE THE OWNER WRITTEN NOTIFICATION THAT THE EXISTING UTILITIES AND SERVICES HAVE BEEN TERMINATED AND ABANDONED IN ACCORDANCE WITH JURISDICTION AND UTILITY COMPANY REQUIREMENTS.
   G. COORDINATION WITH UTILITY COMPANIES REGARDING WORKING "OFF-PEAK" HOURS OR ON WEEKENDS AS MAY BE REQUIRED TO MINIMIZE THE IMPACT ON THE AFFECTED PARTIES.
   H. A COMPLETE INSPECTION OF CONTAMINANTS BY A LICENSED ENVIRONMENTAL TESTING AGENCY, OF ALL BUILDINGS AND/OR STRUCTURES TO BE REMOVED. SAME SHALL BE PERFORMED IN ACCORDANCE WITH ALL APPLICABLE LOCAL, STATE, AND FEDERAL ENVIRONMENTAL REGULATIONS. ANY/ALL CONTAMINANTS SHALL BE REMOVED AND DISPOSED OF BY A FEDERALLY LICENSED CONTRACTOR IN ACCORDANCE WITH FEDERAL, STATE, AND LOCAL REGULATIONS. ALL ENVIRONMENTAL WORK INCLUDING HAZARDOUS MATERIAL, SOILS, ASBESTOS, OR OTHER REFERENCED OR IMPLIED HEREIN IS THE SOLE RESPONSIBILITY OF THE OWNER'S ENVIRONMENTAL CONSULTANT.

4. THE CONTRACTOR SHALL PROVIDE ALL THE "MEANS AND METHODS" NECESSARY TO PREVENT MOVEMENT, SETTLEMENT, OR COLLAPSE OF EXISTING STRUCTURES, AND ANY OTHER IMPROVEMENTS THAT ARE REMAINING ON OR OFF SITE. THE DEMOLITION CONTRACTOR IS RESPONSIBLE FOR ALL REPAIRS OF DAMAGE TO ALL ITEMS THAT ARE TO REMAIN AS A RESULT OF HIS ACTIVITIES. ALL REPAIRS SHALL USE NEW MATERIAL. THE REPAIRS SHALL RESTORE THE ITEM TO THE PRE-DEMOLITION CONDITION.

5. IN THE ABSENCE OF SPECIFICATIONS, THE CONTRACTOR SHALL PERFORM EARTH MOVEMENT ACTIVITIES, DEMOLITION AND REMOVAL OF ALL FOUNDATION WALLS, FOOTINGS, AND OTHER MATERIALS WITHIN THE LIMITS OF DISTURBANCE IN ACCORDANCE WITH DIRECTION BY OWNER'S STRUCTURAL OR GEOTECHNICAL ENGINEER.

6. EXPLOSIVES SHALL NOT BE USED WITHOUT PRIOR WRITTEN CONSENT OF BOTH THE OWNER AND APPLICABLE GOVERNMENTAL AUTHORITIES. ALL THE REQUIRED PERMITS AND EXPLOSIVE CONTROL MEASURES THAT ARE REQUIRED BY THE FEDERAL, STATE, AND LOCAL GOVERNMENTS SHALL BE IN PLACE PRIOR TO STARTING AN EXPLOSIVE PROGRAM. THE CONTRACTOR IS ALSO RESPONSIBLE FOR ALL INSPECTION AND SEISMIC VIBRATION TESTING THAT IS REQUIRED TO MONITOR THE EFFECTS ON ALL LOCAL STRUCTURES.

7. CONTRACTOR SHALL PROVIDE TRAFFIC CONTROL AND GENERALLY ACCEPTED SAFE PRACTICES IN CONFORMANCE WITH: THE "MANUAL ON UNIFORM TRAFFIC CONTROL," AS WELL AS FEDERAL, STATE, AND LOCAL REGULATIONS WHEN DEMOLITION RELATED ACTIVITIES IMPACT ROADWAYS OR ROADWAY RIGHTS - OF - WAY.

8. CONDUCT DEMOLITION ACTIVITIES IN SUCH A MANNER TO ENSURE MINIMUM INTERFERENCE WITH ROADS, STREETS, SIDEWALKS, WALKWAYS, AND OTHER ADJACENT FACILITIES. STREET CLOSURE PERMITS MUST BE RECEIVED FROM THE APPROPRIATE GOVERNMENTAL AUTHORITY.

9. DEMOLITION ACTIVITIES AND EQUIPMENT SHALL NOT USE AREAS OUTSIDE THE DEFINED PROPERTY LINE WITHOUT WRITTEN PERMISSION OF THE OWNER, AND/OR APPROPRIATE GOVERNMENT AGENCY.

10. USE DUST CONTROL MEASURES TO LIMIT AIRBORNE DUST AND DIRT RISING AND SCATTERING IN THE AIR IN ACCORDANCE WITH FEDERAL, STATE, AND/OR LOCAL STANDARDS. AFTER THE DEMOLITION IS COMPLETE, ADJACENT STRUCTURES AND IMPROVEMENTS SHALL BE CLEANED OF ALL DUST AND DEBRIS CAUSED BY THE DEMOLITION OPERATIONS. THE CONTRACTOR IS RESPONSIBLE FOR RETURNING ALL ADJACENT AREAS TO THEIR "PRE-DEMOLITION" CONDITION.

11. CONTRACTOR IS RESPONSIBLE TO SAFEGUARD SITE AS NECESSARY TO PERFORM THE DEMOLITION IN SUCH A MANNER AS TO PREVENT THE ENTRY OF UNAUTHORIZED PERSONS AT ANY TIME.

12. THIS DEMOLITION PLAN IS INTENDED TO IDENTIFY THOSE EXISTING ITEMS/CONDITIONS WHICH ARE TO BE REMOVED. IT IS NOT INTENDED TO PROVIDE DIRECTION OTHER THAN THAT ALL METHODS AND MEANS ARE TO BE IN ACCORDANCE WITH STATE, FEDERAL, LOCAL, AND JURISDICTIONAL REQUIREMENTS. THE CONTRACTOR SHALL BE RESPONSIBLE FOR ALL OSHA AND OTHER SAFETY PRECAUTIONS NECESSARY TO PROVIDE A SAFE WORK SITE.

13. DEBRIS SHALL NOT BE BURIED ON THE SUBJECT SITE. ALL DEMOLITION WASTES AND DEBRIS (SOLID WASTE) SHALL BE DISPOSED OF IN ACCORDANCE WITH ALL TOWN, COUNTY, STATE, AND FEDERAL LAWS AND APPLICABLE CODES.

14. CONTRACTOR IS RESPONSIBLE FOR FIELD VERIFYING ALL EXISTING SITE IMPROVEMENTS AND UTILITIES. ALL DISCREPANCIES SHALL BE IDENTIFIED TO THE ENGINEER IN WRITING.

15. ALL EXISTING UTILITIES BEING REMOVED SHALL BE DONE SO BY THE CONTRACTOR IN ACCORDANCE WITH STATE AND LOCAL REGULATIONS.

16. CONTRACTOR SHALL ENSURE PROPER EROSION CONTROL IS PROVIDED THROUGHOUT THE ENTIRE DURATION OF THE PROJECT.
17. ALL EXISTING FEATURES (I.E. EXISTING BUILDING FOUNDATIONS, UTILITIES) SHALL BE REMOVED FROM AND WITHIN TEN (10) FEET OF THE PROPOSED BUILDING FOUNDATION AND LOADING DOCK RETAINING WALL.
18. ALL EXISTING UTILITIES TO BE ABANDONED SHALL BE REMOVED IF THE DIAMETER IS GREATER THAN 12 INCHES OR GROUTED FULL IF LEFT IN PLACE. ALL DISCONNECTIONS AND CAPPING OF EXISTING UTILITIES MUST BE PREFORMED PER THE REQUIREMENTS OF THE AUTHORITIES HAVING JURISDICTION.
19. THE CONTRACTOR SHALL BE RESPONSIBLE FOR ALL PHASING OF DEMOLITION WHEN THAT DEMOLITION MAY IMPACT TRAFFIC, ACCESS OR UTILITIES TO NEIGHBORS, OR FACILITIES TO REMAIN AND OTHER SURROUNDING INFRASTRUCTURE OR FACILITIES.
20. AND REMAINING SIDEWALK NOT BEING DEMOLISHED SHOULD BE REPAIRED TO LIKE NEW CONDITION.

BOHLER™
ENGINEERING

SITE CIVIL AND CONSULTING ENGINEERING
LAND SURVEYING
PROGRAM MANAGEMENT
LANDSCAPE ARCHITECTURE
SUSTAINABLE DESIGN
PERMITTING SERVICES
TRANSPORTATION SERVICES

THE INFORMATION, DESIGN AND CONTENT OF THIS PLAN ARE PROPRIETARY AND SHALL NOT BE COPIED OR USED FOR ANY PURPOSE WITHOUT PRIOR WRITTEN AUTHORIZATION FROM BOHLER ENGINEERING. ONLY APPROVED, SIGNED AND SEALED PLANS SHALL BE UTILIZED FOR CONSTRUCTION PURPOSES. © BOHLER ENGINEERING

REVISIONS

REV	DATE	COMMENT	DRAWN BY / CHECKED BY
1	2019-08-23	CITY OF DELRAY BEACH COMMENTS	LJL / AS
2	2019-09-10	SPRAB COMMENTS	LJL / AS

THIS DRAWING IS INTENDED FOR MUNICIPAL AND/OR AGENCY REVIEW AND APPROVAL. IT IS NOT INTENDED AS A CONSTRUCTION DOCUMENT UNLESS INDICATED OTHERWISE.

811
Know what's below.
Call before you dig.
ALWAYS CALL 811
It's fast. It's free. It's the law.

ISSUED FOR MUNICIPAL & AGENCY REVIEW & APPROVAL

PROJECT No.:	FLB180120
DRAWN BY:	LJL
CHECKED BY:	AS
DATE:	2019-10-25
CAD I.D.:	FLB180120-DMP-1

PROJECT:

PIERRE DELRAY PHASE 1 - SPRAB SITE PLAN PACKAGE (AKA SUNTRUST BUILDING)

FOR

CLIENT

ZYSCOVICH ARCHITECTS

PROPOSED DEVELOPMENT

302 E ATLANTIC AVE
PALM BEACH COUNTY
DELRAY BEACH, FL

BOHLER
ENGINEERING
2255 GLADES ROAD, SUITE 305E
BOCA RATON, FLORIDA 33431
Phone: (561) 571-0280
Fax: (561) 571-0281
FLORIDA BUSINESS CERT. OF AUTH. No. 30780
LANDSCAPE ARCHITECT BUSINESS LIC. No LC26000551

SHEET TITLE:

DEMOLITION PLAN

SHEET NUMBER:

C-203

REVISION 2 - 2019-09-10

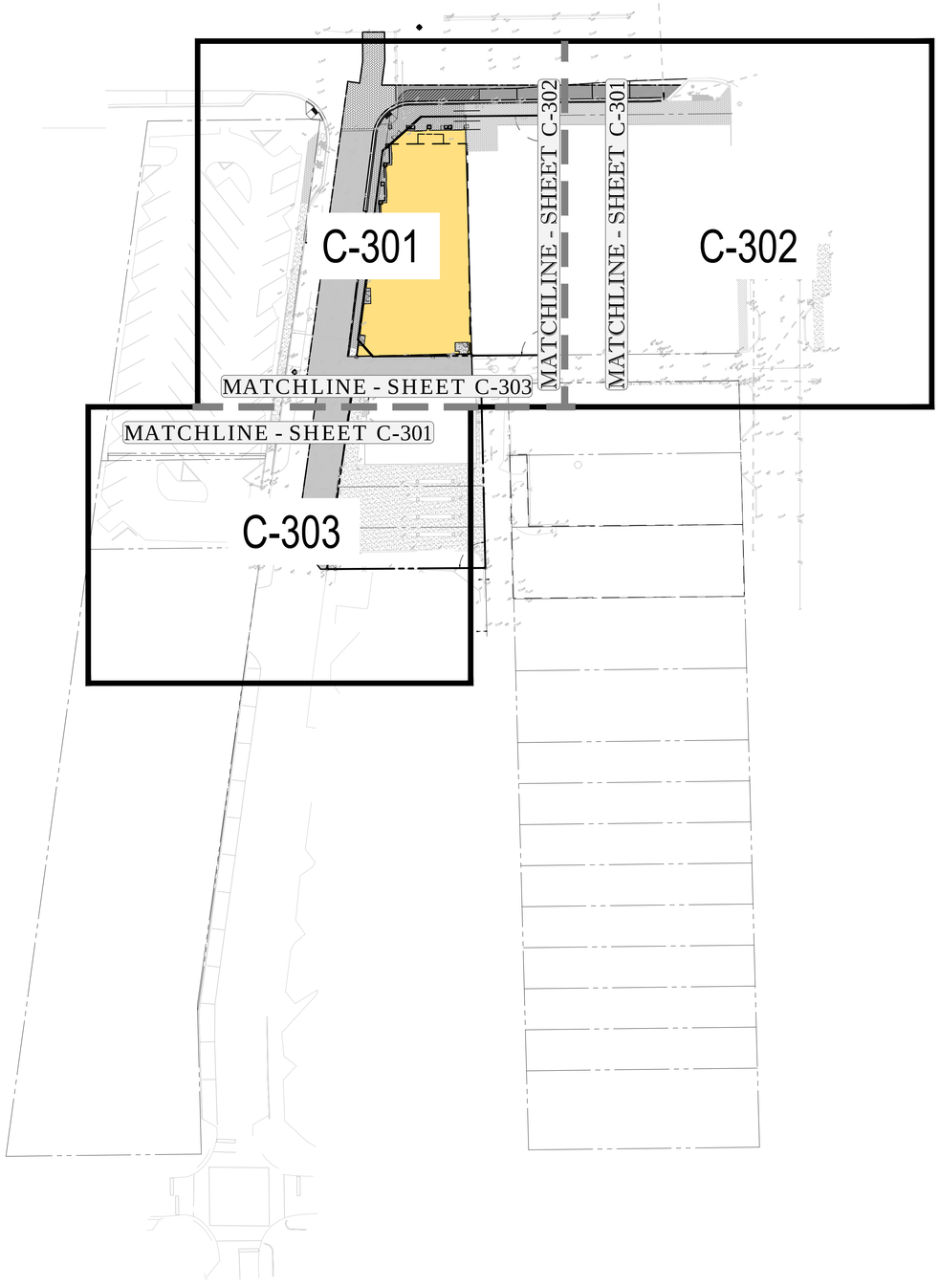

40 20 10 0 40
1"= 40'

BOHLER ENGINEERING

SITE CIVIL AND CONSULTING ENGINEERING
LAND SURVEYING
PROGRAM MANAGEMENT
LANDSCAPE ARCHITECTURE
SUSTAINABLE DESIGN
PERMITTING SERVICES
TRANSPORTATION SERVICES

THE INFORMATION, DESIGN AND CONTENT OF THIS PLAN ARE PROPRIETARY AND SHALL NOT BE COPIED OR USED FOR ANY PURPOSE WITHOUT PRIOR WRITTEN AUTHORIZATION FROM BOHLER ENGINEERING, INC. ©2019 BOHLER ENGINEERING, INC. ALL RIGHTS ARE SHALL BE STRICTLY FOR CONSTRUCTION PURPOSES.

REVISIONS

REV	DATE	COMMENT	DRAWN BY / CHECKED BY
1	2019-08-23	CITY OF DELRAY BEACH COMMENTS	LJL / AS
2	2019-09-10	SPRAB COMMENTS	LJL / AS

THIS DRAWING IS INTENDED FOR MUNICIPAL AND/OR AGENCY REVIEW AND APPROVAL. IT IS NOT INTENDED AS A CONSTRUCTION DOCUMENT UNLESS INDICATED OTHERWISE.

811 Know what's below. Call before you dig.

ALWAYS CALL 811
It's fast. It's free. It's the law.

ISSUED FOR MUNICIPAL & AGENCY REVIEW & APPROVAL

PROJECT No.:	FLB180120
DRAWN BY:	LJL
CHECKED BY:	AS
DATE:	2019-10-25
CAD I.D.:	FLB180120-SSP-1

PROJECT:

PIERRE DELRAY PHASE 1 - SPRAB SITE PLAN PACKAGE (AKA SUNTRUST BUILDING)

FOR

CLIENT

ZYSCOVICH ARCHITECTS

PROPOSED DEVELOPMENT

302 E ATLANTIC AVE
PALM BEACH COUNTY
DELRAY BEACH, FL

BOHLER ENGINEERING
2255 GLADES ROAD, SUITE 305E
BOCA RATON, FLORIDA 33431
Phone: (561) 571-0280
Fax: (561) 571-0281
FLORIDA BUSINESS CERT. OF AUTH. No. 30780
LANDSCAPE ARCHITECT BUSINESS LIC. No LC26000551

SHEET TITLE:

SITE PLAN KEY SHEET

SHEET NUMBER:

C-300

REVISION 2 - 2019-09-10

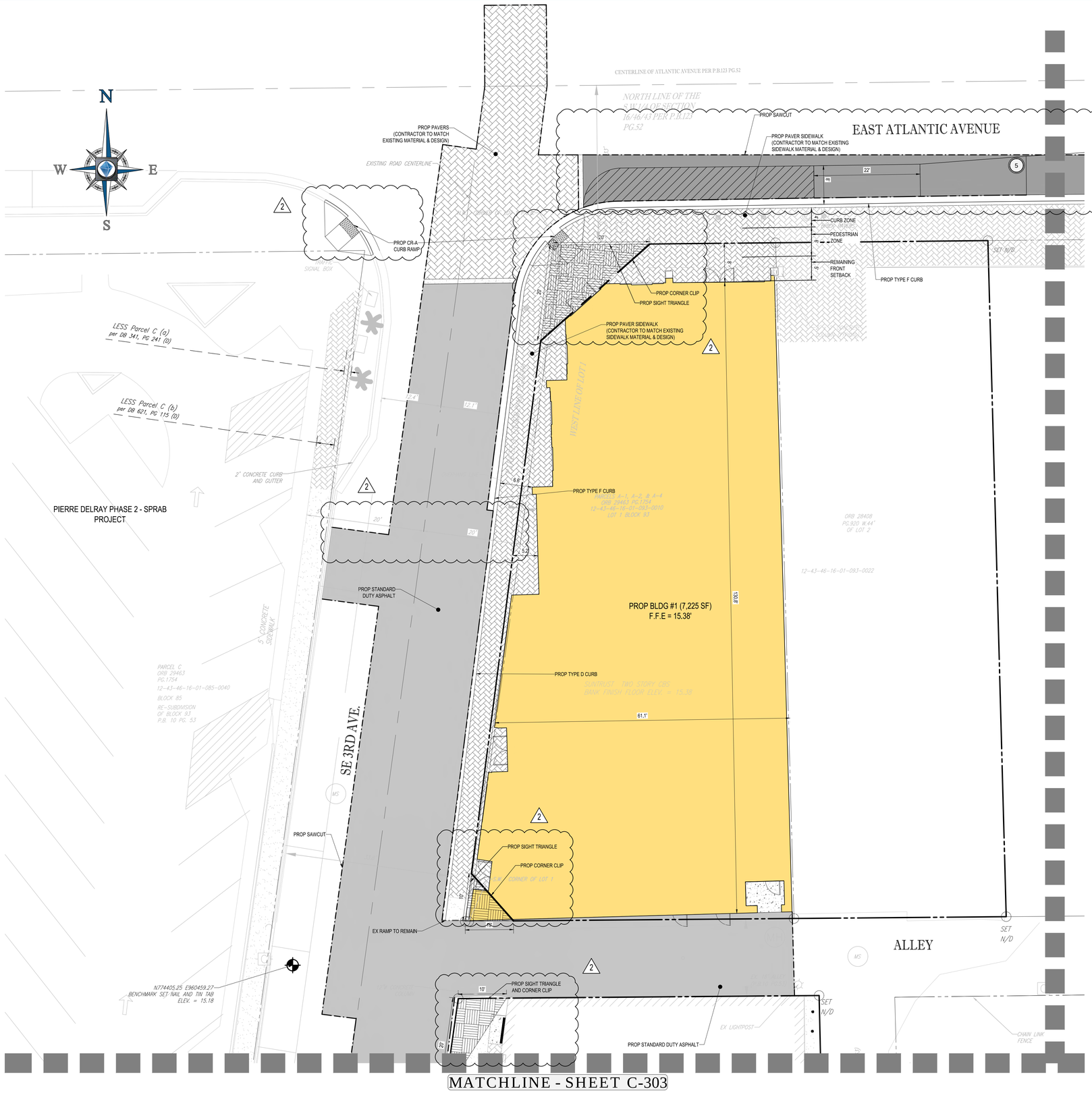

LEGEND:

- EX LEASE LINE
- EX ADJACENT BOUNDARY LINES
- EX EASEMENT LINES
- PROP BUILDING SETBACK
- PROP TYPE "D" CURB
- PROP TYPE "F" CURB
- PROP CONCRETE PAVEMENT
- PROP STANDARD ASPHALT
- PROP BRICK PAVERS
- PROP SIGHT TRIANGLE

SITE DATA TABLE

JURISDICTION	CITY OF DELRAY BEACH
OVERLAY DISTRICT	N/A
FUTURE LAND USE	COMMERCIAL CORE (CC)
SITE AREA	7,988 SF (0.18 AC)
BUILDING AREA	RETAIL: 7,225 SF (0.16 AC) **TOTAL: 7,225 SF (0.16 AC)**
CURRENT ZONING	CENTRAL BUSINESS DISTRICT (CBD)
PROPOSED USE	CENTRAL BUSINESS DISTRICT (CBD)
MAX. ALLOWED BUILDING HEIGHT	54' (4 STORIES)
PROVIDED BUILDING HEIGHT	29'
FRONT SETBACK	10' MIN 15' MAX
SIDE SETBACK	0'
REAR SETBACK	10'
REQUIRED PARKING	RETAIL: 14.45 SPACES (1 SPACE/500 SF)
PROVIDED PARKING	N/A
FEMA FLOOD ZONE	FLOOD ZONE: X

SITE NOTES:

1. ALL DIMENSIONS SHOWN ARE SHOWN AT FACE OF CURB, UNLESS OTHERWISE NOTED. B/C INDICATES DIMENSION IS TO BACK OF CURB. NAVD = NGVD - 1.5'
2. ALL SIGNS SHALL BE REVIEWED AND PERMITTED SEPARATELY.
3. THE PROPERTY SHOWN HEREON APPEARS TO LIE IN FLOOD ZONE "X" ACCORDING TO THE FLOOD INSURANCE RATE MAP, PANEL NUMBER 12099C0979F OCTOBER 5, 2017, FOR PALM BEACH COUNTY, FLORIDA.
4. ALL PAVEMENT MARKINGS, EXCEPT PARKING STALLS, SHALL BE "ALKYD THERMOPLASTIC 90 MILS IN THICKNESS".
5. SOD TO BE INSTALLED AT THE BACK OF ALL CURBS, PAVEMENT EDGES, SWALES AND DETENTION AREAS ON ALL AREAS SOUTH OF THE MAIN BUILDING AND HANGARS.
6. IN THE EVENT THE PROJECT IS TERMINATED PRIOR TO CONSTRUCTION COMPLETION, THE PROJECT SHALL BE BROUGHT TO GRADE, SEEDED AND ALL DEBRIS AND MATERIALS SHALL BE HAULED OFF-SITE AND DUMPED AT A STATE OF FLORIDA APPROVED FACILITY.
7. CONTRACTOR SHALL BE RESPONSIBLE THAT ALL ACCESSIBLE ROUTES MEET THE FLORIDA ACCESSIBILITY CODE PRIOR TO INSTALLING FINAL PAVEMENT AND CONCRETE.
8. CONSTRUCTION PLAN APPROVAL DOES NOT EXEMPT THE CONTRACTOR FROM OBTAINING THE REQUIRED BUILDING, ELECTRICAL, PLUMBING AND MECHANICAL PERMITS. THESE INCLUDE BUT ARE NOT LIMITED TO ANY STRUCTURE, SIGN, WALL, ENCLOSURE OR SCREENING, ETC.
9. ALL SIGNS WILL BE REVIEWED UNDER A SEPARATE PERMIT.
10. ALL CONSTRUCTION AND RESTORATION WORK WITHIN BROWARD COUNTY RIGHT OF WAY SHALL COMPLY WITH THE LATEST EDITION OF FDOT DESIGN STANDARDS AND THE PDOT STANDARD SPECIFICATIONS FOR ROAD AND BRIDGE CONSTRUCTION.
11. ANY TREES OR SHRUBS PLACED WITHIN WATER, SEWER, OR DRAINAGE EASEMENTS SHALL CONFORM TO THE CITY OF DELRAY BEACH STANDARDS; LO 1.1 & LO 1.2.

ADA ACCESSIBILITY NOTES:

1. ALL HANDICAPPED PARKING SPACES AND ACCESS AISLES ADJACENT TO THE HANDICAP PARKING SPACES SHALL HAVE A MAXIMUM OF 2% SLOPE IN ALL DIRECTIONS (THIS INCLUDES RUNNING SLOPE AND CROSS SLOPE).
2. SLOPES EXCEEDING 5% BUT LESS THAN 8% WILL REQUIRE A RAMP AND MUST CONFORM TO THE REQUIREMENTS FOR RAMP DESIGN (HANDRAILS, CURBS, LANDINGS). NO RAMP SHALL EXCEED AN 8% RUNNING SLOPE OR 2% CROSS SLOPE.
3. IN THE CASE THAT A NEW SIDEWALK WILL BE CONSTRUCTED IN THE RW OF A SITE THE RUNNING SLOPE OF THE SIDEWALK SHALL NOT EXCEED 5% AND THE CROSS SLOPE SHALL NOT EXCEED 2%. THIS STANDARD APPLIES TO CROSS WALKS IN THE DRIVEWAY AS WELL AND WILL REQUIRE SPECIAL ATTENTION DURING STAKING TO MAKE SURE THE 2% CROSS SLOPE IS MET IN THE CROSS WALK.
4. IT WILL BE THE RESPONSIBILITY OF THE GENERAL CONTRACTOR TO ENSURE THAT THE HANDICAP PARKING SPACES, ACCESSIBLE ROUTES, AND SIDEWALKS/CROSSWALKS ARE CONSTRUCTED TO MEET ADA REQUIREMENTS.
5. ANY REQUIREMENTS LISTED ABOVE THAT CAN NOT BE MET SHALL BE BROUGHT TO THE ENGINEER'S ATTENTION IMMEDIATELY. ANYTHING NOT BUILT TO THE ABOVE STANDARDS WILL REQUIRE REMOVAL AND REPLACEMENT OF THE NON COMPLIANT AREAS AT THE GENERAL CONTRACTORS COST.
6. ALL CONSTRUCTION TO COMPLY WITH THE AMERICANS WITH DISABILITIES ACT AND THE FLORIDA ACCESSIBILITY CODE.

BOHLER ENGINEERING
SITE CIVIL AND CONSULTING ENGINEERING
LAND SURVEYING
PROGRAM MANAGEMENT
LANDSCAPE ARCHITECTURE
SUSTAINABLE DESIGN
PERMITTING SERVICES
TRANSPORTATION SERVICES

THE INFORMATION, DESIGN AND CONTENT OF THIS PLAN ARE PROPRIETARY AND SHALL NOT BE COPIED OR USED FOR ANY PURPOSE WITHOUT PRIOR WRITTEN AUTHORIZATION FROM BOHLER ENGINEERING. ONLY THOSE PLANS OR PORTIONS THEREOF MARKED FOR CONSTRUCTION SHALL BE UTILIZED FOR CONSTRUCTION PURPOSES.

REVISIONS

REV	DATE	COMMENT	DRAWN BY / CHECKED BY
1	2019-08-23	CITY OF DELRAY BEACH COMMENTS	LJL AS
2	2019-09-10	SPRAB COMMENTS	LJL AS

THIS DRAWING IS INTENDED FOR MUNICIPAL AND/OR AGENCY REVIEW AND APPROVAL. IT IS NOT INTENDED AS A CONSTRUCTION DOCUMENT UNLESS INDICATED OTHERWISE.

811 Know what's below. Call before you dig.

ALWAYS CALL 811

It's fast. It's free. It's the law.

ISSUED FOR MUNICIPAL & AGENCY REVIEW & APPROVAL

PROJECT No.:	FLB180120
DRAWN BY:	LJL
CHECKED BY:	AS
DATE:	2019-10-25
CAD I.D.:	FLB180120-SSP-1

PROJECT:

PIERRE DELRAY PHASE 1 - SPRAB SITE PLAN PACKAGE (AKA SUNTRUST BUILDING)

FOR

CLIENT

ZYSCOVICH ARCHITECTS

PROPOSED DEVELOPMENT

302 E ATLANTIC AVE
PALM BEACH COUNTY
DELRAY BEACH, FL

BOHLER ENGINEERING
2255 GLADES ROAD, SUITE 305E
BOCA RATON, FLORIDA 33431
Phone: (561) 571-0280
Fax: (561) 571-0281
FLORIDA BUSINESS CERT. OF AUTH. No. 30780
LANDSCAPE ARCHITECT BUSINESS LIC. No LC26000551

SHEET TITLE:

SITE PLAN

SHEET NUMBER:

C-301

REVISION 2 - 2019-09-10

LEGEND:

- EX LEASE LINE
- EX ADJACENT BOUNDARY LINES
- EX EASEMENT LINES
- PROP BUILDING SETBACK
- PROP TYPE "D" CURB
- PROP TYPE "F" CURB
- PROP CONCRETE PAVEMENT
- PROP STANDARD ASPHALT
- PROP BRICK PAVERS
- PROP SIGHT TRIANGLE

SITE NOTES:

1. ALL DIMENSIONS SHOWN ARE SHOWN AT FACE OF CURB, UNLESS OTHERWISE NOTED. B/C INDICATES DIMENSION IS TO BACK OF CURB. NAVD = NGVD - 1.5'
2. ALL SIGNS SHALL BE REVIEWED AND PERMITTED SEPARATELY.
3. THE PROPERTY SHOWN HEREON APPEARS TO LIE IN FLOOD ZONE "X" ACCORDING TO THE FLOOD INSURANCE RATE MAP, PANEL NUMBER 12099C0979F OCTOBER 5, 2017, FOR PALM BEACH COUNTY, FLORIDA.
4. ALL PAVEMENT MARKINGS, EXCEPT PARKING STALLS, SHALL BE "ALKYD THERMOPLASTIC 90 MILS IN THICKNESS".
5. SOD TO BE INSTALLED AT THE BACK OF ALL CURBS, PAVEMENT EDGES, SWALES AND DETENTION AREAS ON ALL AREAS SOUTH OF THE MAIN BUILDING AND HANGARS. IN THE EVENT THE PROJECT IS TERMINATED PRIOR TO CONSTRUCTION COMPLETION, THE PROJECT SHALL BE BROUGHT TO GRADE, SEEDED AND ALL DEBRIS AND MATERIALS SHALL BE HAULED OFF-SITE AND DUMPED AT A STATE OF FLORIDA APPROVED FACILITY.
7. CONTRACTOR SHALL BE RESPONSIBLE THAT ALL ACCESSIBLE ROUTES MEET THE FLORIDA ACCESSIBILITY CODE PRIOR TO INSTALLING FINAL PAVEMENT AND CONCRETE.
8. CONSTRUCTION PLAN APPROVAL DOES NOT EXEMPT THE CONTRACTOR FROM OBTAINING THE REQUIRED BUILDING, ELECTRICAL, PLUMBING AND MECHANICAL PERMITS. THESE INCLUDE BUT ARE NOT LIMITED TO ANY STRUCTURE, SIGN, WALL, ENCLOSURE OR SCREENING, ETC.
9. ALL SIGNS WILL BE REVIEWED UNDER A SEPARATE PERMIT.
10. ALL CONSTRUCTION AND RESTORATION WORK WITHIN BROWARD COUNTY RIGHT OF WAY SHALL COMPLY WITH THE LATEST EDITION OF FDOT DESIGN STANDARDS AND THE FDOT STANDARD SPECIFICATIONS FOR ROAD AND BRIDGE CONSTRUCTION.
11. ANY TREES OR SHRUBS PLACED WITHIN WATER, SEWER, OR DRAINAGE EASEMENTS SHALL CONFORM TO THE CITY OF DELRAY BEACH STANDARDS; LO 1.1 & LO 1.2.

ADA ACCESSIBILITY NOTES:

1. ALL HANDICAPPED PARKING SPACES AND ACCESS AISLES ADJACENT TO THE HANDICAP PARKING SPACES SHALL HAVE A MAXIMUM OF 2% SLOPE IN ALL DIRECTIONS (THIS INCLUDES RUNNING SLOPE AND CROSS SLOPE).
2. SLOPES EXCEEDING 5% BUT LESS THAN 8% WILL REQUIRE A RAMP AND MUST CONFORM TO THE REQUIREMENTS FOR RAMP DESIGN (HANDRAILS, CURBS, LANDINGS). NO RAMP SHALL EXCEED AN 8% RUNNING SLOPE OR 2% CROSS SLOPE.
3. IN THE CASE THAT A NEW SIDEWALK WILL BE CONSTRUCTED IN THE RW OF A SITE THE RUNNING SLOPE OF THE SIDEWALK SHALL NOT EXCEED 5% AND THE CROSS SLOPE SHALL NOT EXCEED 2%. THIS STANDARD APPLIES TO CROSS WALKS IN THE DRIVEWAY AS WELL AND WILL REQUIRE SPECIAL ATTENTION DURING STAKING TO MAKE SURE THE 2% CROSS SLOPE IS MET IN THE CROSS WALK.
4. IT WILL BE THE RESPONSIBILITY OF THE GENERAL CONTRACTOR TO ENSURE THAT THE HANDICAP PARKING SPACES, ACCESSIBLE ROUTES, AND SIDEWALKS/CROSSWALKS ARE CONSTRUCTED TO MEET ADA REQUIREMENTS.
5. ANY REQUIREMENTS LISTED ABOVE THAT CAN NOT BE MET SHALL BE BROUGHT TO THE ENGINEER'S ATTENTION IMMEDIATELY. ANYTHING NOT BUILT TO THE ABOVE STANDARDS WILL REQUIRE REMOVAL AND REPLACEMENT OF THE NON COMPLIANT AREAS AT THE GENERAL CONTRACTORS COST.
6. ALL CONSTRUCTION TO COMPLY WITH THE AMERICANS WITH DISABILITIES ACT AND THE FLORIDA ACCESSIBILITY CODE.

BOHLER™ ENGINEERING

SITE CIVIL AND CONSULTING ENGINEERING
LAND SURVEYING
PROGRAM MANAGEMENT
LANDSCAPE ARCHITECTURE
SUSTAINABLE DESIGN
PERMITTING SERVICES
TRANSPORTATION SERVICES

THE INFORMATION, DESIGN AND CONTENT OF THIS PLAN ARE PROPRIETARY AND SHALL NOT BE COPIED OR USED FOR ANY PURPOSE WITHOUT PRIOR WRITTEN AUTHORIZATION FROM BOHLER ENGINEERING. ONLY THE PLANS IN WHICH THE SEAL OF A PROFESSIONAL ENGINEER APPEARS SHALL BE UTILIZED FOR CONSTRUCTION PURPOSES.

REVISIONS

REV	DATE	COMMENT	DRAWN BY / CHECKED BY
1	2019-08-23	CITY OF DELRAY BEACH COMMENTS	LJL / AS
2	2019-09-10	SPRAB COMMENTS	LJL / AS

THIS DRAWING IS INTENDED FOR MUNICIPAL AND/OR AGENCY REVIEW AND APPROVAL. IT IS NOT INTENDED AS A CONSTRUCTION DOCUMENT UNLESS INDICATED OTHERWISE.

811 Know what's below. Call before you dig.

ALWAYS CALL 811

It's fast. It's free. It's the law.

ISSUED FOR MUNICIPAL & AGENCY REVIEW & APPROVAL

PROJECT No.:	FLB180120
DRAWN BY:	LJL
CHECKED BY:	AS
DATE:	2019-10-25
CAD I.D.:	FLB180120-SSP-1

PROJECT:

PIERRE DELRAY PHASE 1 - SPRAB SITE PLAN PACKAGE (AKA SUNTRUST BUILDING)

FOR

CLIENT

ZYSCOVICH ARCHITECTS

PROPOSED DEVELOPMENT

302 E ATLANTIC AVE
PALM BEACH COUNTY
DELRAY BEACH, FL

BOHLER ENGINEERING
2255 GLADES ROAD, SUITE 305E
BOCA RATON, FLORIDA 33431
Phone: (561) 571-0280
Fax: (561) 571-0281
FLORIDA BUSINESS CERT. OF AUTH. No. 30780
LANDSCAPE ARCHITECT BUSINESS LIC. NO. LC26000551

SHEET TITLE:

SITE PLAN

SHEET NUMBER:

C-302

REVISION 2 - 2019-09-10

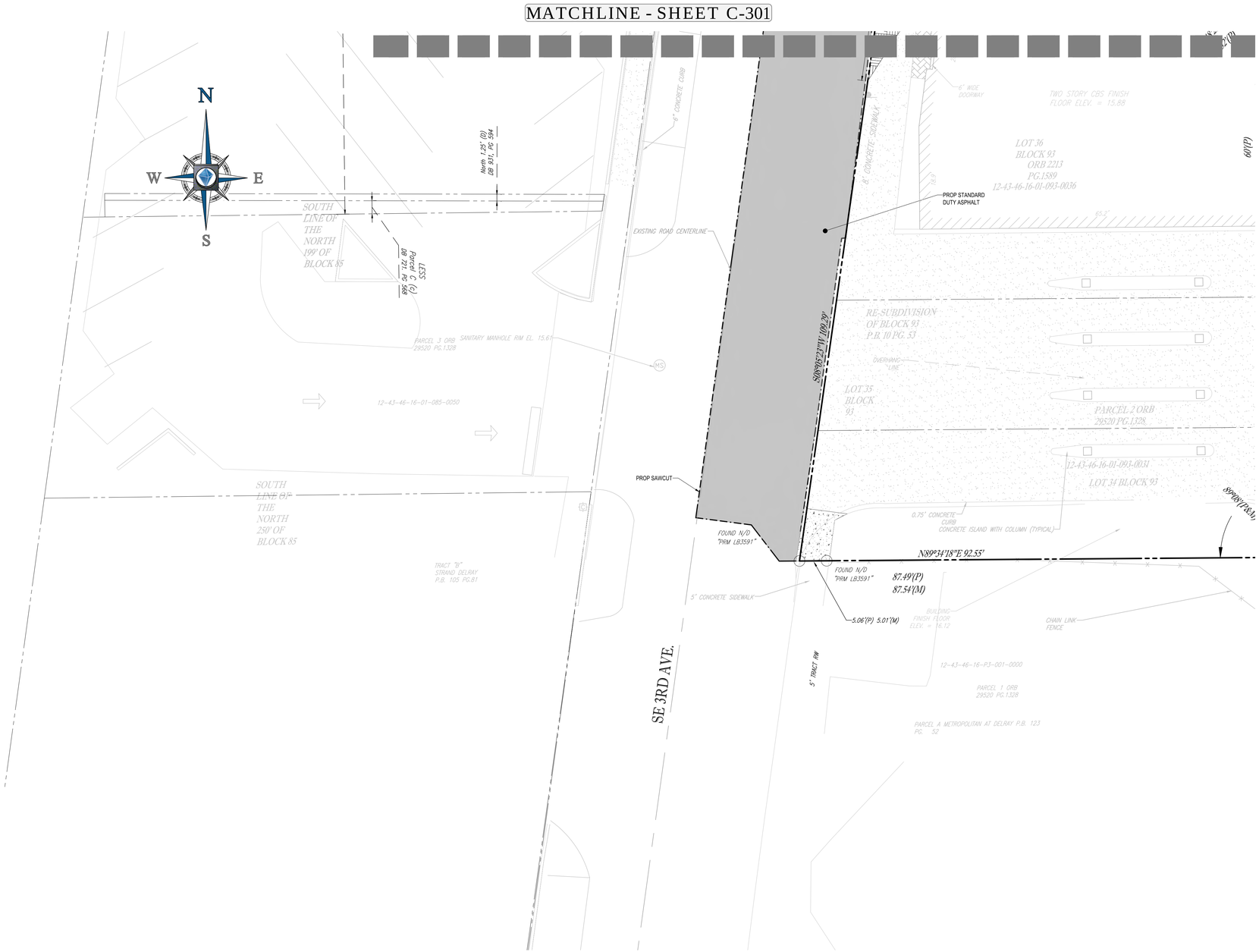

LEGEND:

- EX LEASE LINE
- EX ADJACENT BOUNDARY LINES
- EX EASEMENT LINES
- PROP BUILDING SETBACK
- PROP TYPE "D" CURB
- PROP CONCRETE PAVEMENT
- PROP STANDARD ASPHALT
- PROP BRICK PAVERS
- PROP SIGHT TRIANGLE

SITE NOTES:

1. ALL DIMENSIONS SHOWN ARE SHOWN AT FACE OF CURB, UNLESS OTHERWISE NOTED. B/C INDICATES DIMENSION IS TO BACK OF CURB. NAVD = NGVD - 1.5'
2. ALL SIGNS SHALL BE REVIEWED AND PERMITTED SEPARATELY.
3. THE PROPERTY SHOWN HEREON APPEARS TO LIE IN FLOOD ZONE "X" ACCORDING TO THE FLOOD INSURANCE RATE MAP, PANEL NUMBER 12099C0979F OCTOBER 5, 2017, FOR PALM BEACH COUNTY, FLORIDA.
4. ALL PAVEMENT MARKINGS, EXCEPT PARKING STALLS, SHALL BE "ALKYD THERMOPLASTIC 90 MILS IN THICKNESS".
5. SOD TO BE INSTALLED AT THE BACK OF ALL CURBS, PAVEMENT EDGES, SWALES AND DETENTION AREAS ON ALL AREAS SOUTH OF THE MAIN BUILDING AND HANGARS. IN THE EVENT THE PROJECT IS TERMINATED PRIOR TO CONSTRUCTION COMPLETION, THE PROJECT SHALL BE BROUGHT TO GRADE, SEEDED AND ALL DEBRIS AND MATERIALS SHALL BE HAULED OFF-SITE AND DUMPED AT A STATE OF FLORIDA APPROVED FACILITY.
7. CONTRACTOR SHALL BE RESPONSIBLE THAT ALL ACCESSIBLE ROUTES MEET THE FLORIDA ACCESSIBILITY CODE PRIOR TO INSTALLING FINAL PAVEMENT AND CONCRETE.
8. CONSTRUCTION PLAN APPROVAL DOES NOT EXEMPT THE CONTRACTOR FROM OBTAINING THE REQUIRED BUILDING, ELECTRICAL, PLUMBING AND MECHANICAL PERMITS. THESE INCLUDE BUT ARE NOT LIMITED TO ANY STRUCTURE, SIGN, WALL, ENCLOSURE OR SCREENING, ETC.
9. ALL SIGNS WILL BE REVIEWED UNDER A SEPARATE PERMIT.
10. ALL CONSTRUCTION AND RESTORATION WORK WITHIN BROWARD COUNTY RIGHT OF WAY SHALL COMPLY WITH THE LATEST EDITION OF FDOT DESIGN STANDARDS AND THE FDOT STANDARD SPECIFICATIONS FOR ROAD AND BRIDGE CONSTRUCTION.
11. ANY TREES OR SHRUBS PLACED WITHIN WATER, SEWER, OR DRAINAGE EASEMENTS SHALL CONFORM TO THE CITY OF DELRAY BEACH STANDARDS; LO 1.1 & LO 1.2.

ADA ACCESSIBILITY NOTES:

1. ALL HANDICAPPED PARKING SPACES AND ACCESS AISLES ADJACENT TO THE HANDICAP PARKING SPACES SHALL HAVE A MAXIMUM OF 2% SLOPE IN ALL DIRECTIONS (THIS INCLUDES RUNNING SLOPE AND CROSS SLOPE).
2. SLOPES EXCEEDING 5% BUT LESS THAN 8% WILL REQUIRE A RAMP AND MUST CONFORM TO THE REQUIREMENTS FOR RAMP DESIGN (HANDRAILS, CURBS, LANDINGS). NO RAMP SHALL EXCEED AN 8% RUNNING SLOPE OR 2% CROSS SLOPE.
3. IN THE CASE THAT A NEW SIDEWALK WILL BE CONSTRUCTED IN THE RW OF A SITE THE RUNNING SLOPE OF THE SIDEWALK SHALL NOT EXCEED 5% AND THE CROSS SLOPE SHALL NOT EXCEED 2%. THIS STANDARD APPLIES TO CROSS WALKS IN THE DRIVEWAY AS WELL AND WILL REQUIRE SPECIAL ATTENTION DURING STAKING TO MAKE SURE THE 2% CROSS SLOPE IS MET IN THE CROSS WALK.
4. IT WILL BE THE RESPONSIBILITY OF THE GENERAL CONTRACTOR TO ENSURE THAT THE HANDICAP PARKING SPACES, ACCESSIBLE ROUTES, AND SIDEWALKS/CROSSWALKS ARE CONSTRUCTED TO MEET ADA REQUIREMENTS.
5. ANY REQUIREMENTS LISTED ABOVE THAT CAN NOT BE MET SHALL BE BROUGHT TO THE ENGINEER'S ATTENTION IMMEDIATELY. ANYTHING NOT BUILT TO THE ABOVE STANDARDS WILL REQUIRE REMOVAL AND REPLACEMENT OF THE NON COMPLIANT AREAS AT THE GENERAL CONTRACTORS COST.
6. ALL CONSTRUCTION TO COMPLY WITH THE AMERICANS WITH DISABILITIES ACT AND THE FLORIDA ACCESSIBILITY CODE.

10 5 2.5 0 10

1"= 10'

BOHLER™ ENGINEERING

SITE CIVIL AND CONSULTING ENGINEERING
LAND SURVEYING
PROGRAM MANAGEMENT
LANDSCAPE ARCHITECTURE
SUSTAINABLE DESIGN
PERMITTING SERVICES
TRANSPORTATION SERVICES

THE INFORMATION, DESIGN AND CONTENT OF THIS PLAN ARE PROPRIETARY AND SHALL NOT BE COPIED OR USED FOR ANY PURPOSE WITHOUT PRIOR WRITTEN AUTHORIZATION FROM BOHLER ENGINEERING. ONLY THE PLANS AND SPECIFICATIONS SEALED BY A LICENSED PROFESSIONAL ENGINEER SHALL BE UTILIZED FOR CONSTRUCTION PURPOSES.

REVISIONS

REV	DATE	COMMENT	DRAWN BY / CHECKED BY
1	2019-08-23	CITY OF DELRAY BEACH COMMENTS	LJL / AS
2	2019-09-10	SPRAB COMMENTS	LJL / AS

THIS DRAWING IS INTENDED FOR MUNICIPAL AND/OR AGENCY REVIEW AND APPROVAL. IT IS NOT INTENDED AS A CONSTRUCTION DOCUMENT UNLESS INDICATED OTHERWISE.

811 Know what's below. Call before you dig.

ALWAYS CALL 811

It's fast. It's free. It's the law.

ISSUED FOR MUNICIPAL & AGENCY REVIEW & APPROVAL

PROJECT No.:	FLB180120
DRAWN BY:	LJL
CHECKED BY:	AS
DATE:	2019-10-25
CAD I.D.:	FLB180120-SSP-1

PROJECT:

PIERRE DELRAY PHASE 1 - SPRAB SITE PLAN PACKAGE (AKA SUNTRUST BUILDING)

FOR

CLIENT

ZYSCOVICH ARCHITECTS

PROPOSED DEVELOPMENT

302 E ATLANTIC AVE
PALM BEACH COUNTY
DELRAY BEACH, FL

BOHLER ENGINEERING
2255 GLADES ROAD, SUITE 305E
BOCA RATON, FLORIDA 33431
Phone: (561) 571-0280
Fax: (561) 571-0281
FLORIDA BUSINESS CERT. OF AUTH. No. 30780
LANDSCAPE ARCHITECT BUSINESS LIC. NO LC26000551

SHEET TITLE:

SITE PLAN

SHEET NUMBER:

C-303

REVISION 2 - 2019-09-10

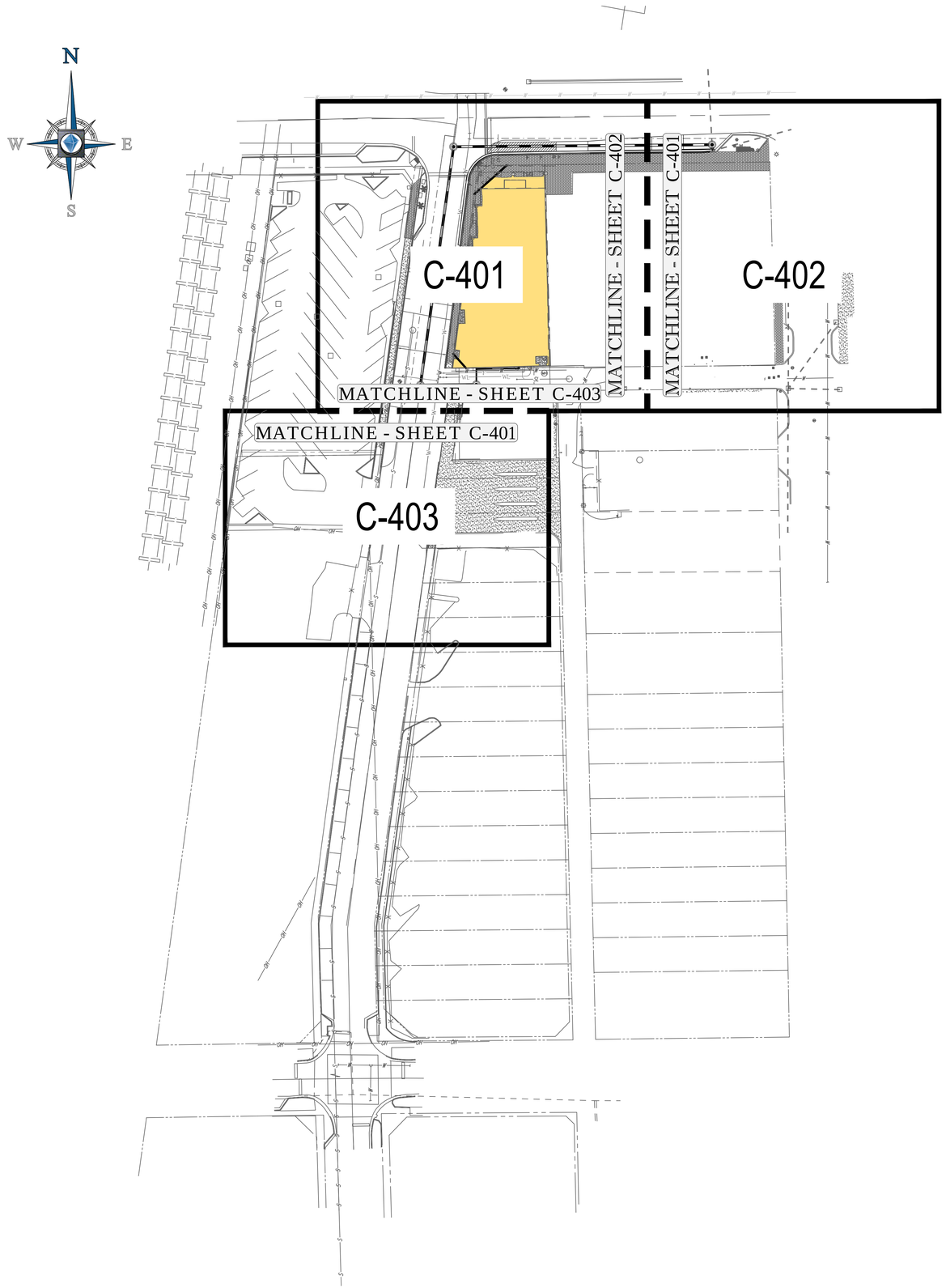

40 20 10 0 40
1"= 40'

BOHLER ENGINEERING

SITE CIVIL AND CONSULTING ENGINEERING
LAND SURVEYING
PROGRAM MANAGEMENT
LANDSCAPE ARCHITECTURE
SUSTAINABLE DESIGN
PERMITTING SERVICES
TRANSPORTATION SERVICES

THE INFORMATION, DESIGN AND CONTENT OF THIS PLAN ARE PROPRIETARY AND SHALL NOT BE COPIED OR USED FOR ANY PURPOSE WITHOUT PRIOR WRITTEN AUTHORIZATION FROM BOHLER ENGINEERING, INC. ALL PLANS, DOCUMENTS, REPORTS, TABULATIONS, CALCULATIONS AND SOFTWARE SHALL BE UTILIZED FOR CONSTRUCTION PURPOSES ONLY WHEN THE SEAL AND SIGNATURE OF A PROFESSIONAL ENGINEER IS AFFIXED.

REVISIONS

REV	DATE	COMMENT	DRAWN BY / CHECKED BY
1	2019-08-23	CITY OF DELRAY BEACH COMMENTS	LJL / AS
2	2019-09-10	SPRAB COMMENTS	LJL / AS

THIS DRAWING IS INTENDED FOR MUNICIPAL AND/OR AGENCY REVIEW AND APPROVAL. IT IS NOT INTENDED AS A CONSTRUCTION DOCUMENT UNLESS INDICATED OTHERWISE.

811 Know what's below. Call before you dig.

ALWAYS CALL 811

It's fast. It's free. It's the law.

ISSUED FOR MUNICIPAL & AGENCY REVIEW & APPROVAL

PROJECT No.:	FLB180120
DRAWN BY:	LJL
CHECKED BY:	AS
DATE:	2019-10-25
CAD I.D.:	FLB180120-GDP-1

PROJECT:

PIERRE DELRAY PHASE 1 - SPRAB SITE PLAN PACKAGE (AKA SUNTRUST BUILDING)

FOR

CLIENT

ZYSCOVICH ARCHITECTS

PROPOSED DEVELOPMENT

302 E ATLANTIC AVE
PALM BEACH COUNTY
DELRAY BEACH, FL

BOHLER ENGINEERING
2255 GLADES ROAD, SUITE 305E
BOCA RATON, FLORIDA 33431
Phone: (561) 571-0280
Fax: (561) 571-0281
FLORIDA BUSINESS CERT. OF AUTH. No. 30780
LANDSCAPE ARCHITECT BUSINESS LIC. No LC26000551

SHEET TITLE:

PGD PLAN KEY SHEET

SHEET NUMBER:

C-400

REVISION 2 - 2019-09-10

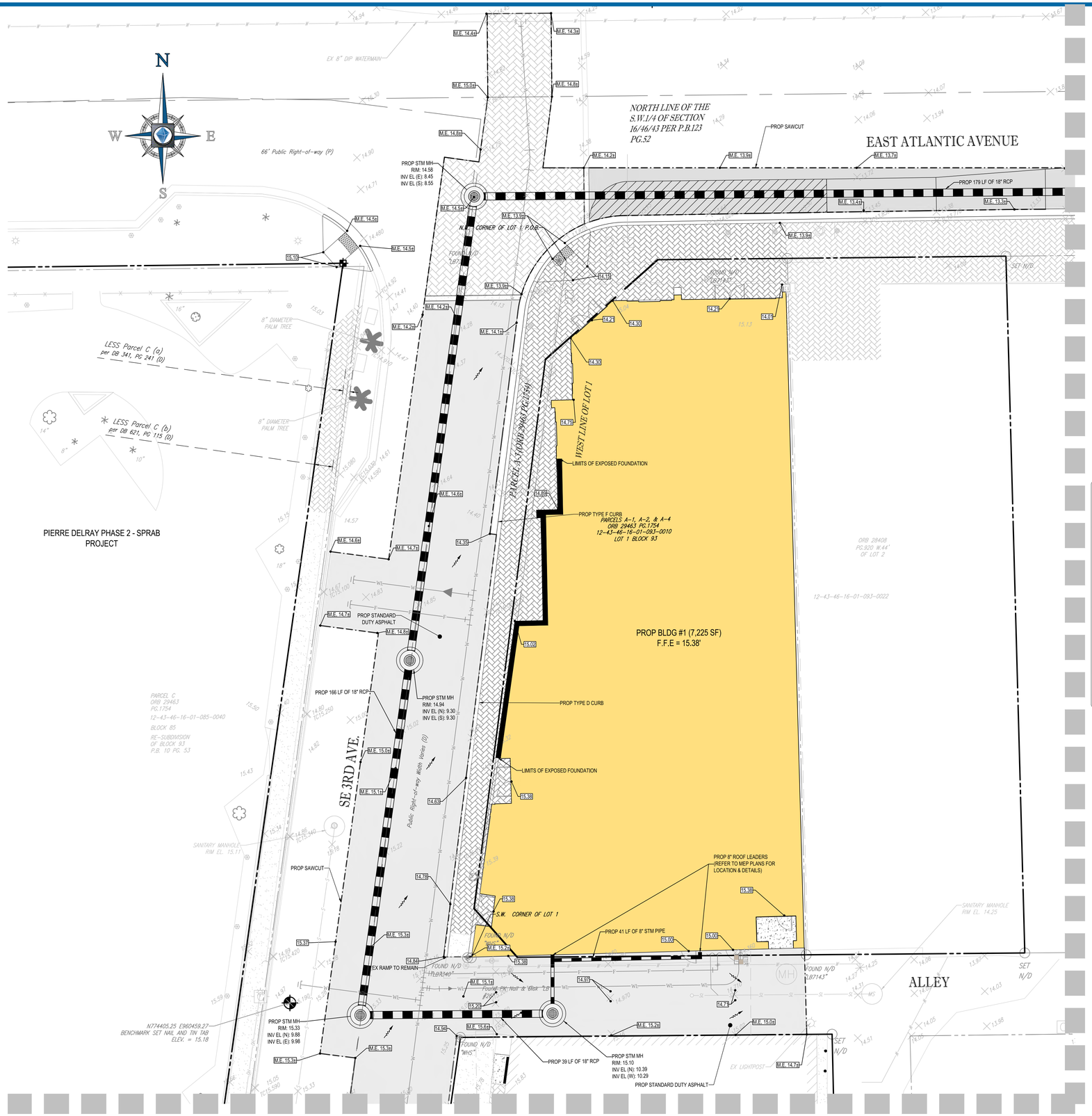

LEGEND:

- EX PROPERTY BOUNDARY LINES
- PROP PROPERTY BOUNDARY LINES
- EX STORM SEWER PIPE
- EX SPOT GRADE
- PROP SPOT GRADE
- PROP STANDARD ASPHALT
- PROP STANDARD CONCRETE
- PROP DRAINAGE ARROW
- PROP RIDGE LINE
- PROP DRAINAGE PIPE
- PROP STORM STRUCTURE

PAVING AND GRADING NOTES:

A. GENERAL:

1. ALL ELEVATIONS SHOWN ARE IN REFERENCE TO THE SURVEYOR'S BENCHMARKS AND MUST BE VERIFIED BY THE GENERAL CONTRACTOR PRIOR TO GROUNDBREAK.
2. ALL GRADES SHOWN REFERENCE PROPOSED ELEVATIONS AT EDGE OF PAVEMENT, UNLESS OTHERWISE NOTED. "TC" = TOP OF CURB ELEVATION; "BC" = BOTTOM OF CURB ELEVATION (EDGE OF PAVEMENT); "MATCH" = PROPOSED GRADE TO MATCH EXISTING GRADE; T/W = TOP OF RETAINING WALL ELEVATION; B/W = BOTTOM OF RETAINING WALL ELEVATION.
3. THE ALTA/ACSM LAND TITLE SURVEY SHALL BE CONSIDERED A PART OF THESE PLANS.
4. THE GEOTECHNICAL REPORT AND RECOMMENDATIONS SET FORTH THEREIN ARE A PART OF THE REQUIRED CONSTRUCTION DOCUMENTS AND IN CASE OF CONFLICT SHALL TAKE PRECEDENCE UNLESS SPECIFICALLY NOTED OTHERWISE ON THE PLANS. THE CONTRACTOR SHALL NOTIFY THE ENGINEER IN WRITING OF ANY SUCH DISCREPANCY BETWEEN GEOTECHNICAL REPORT AND PLANS, ETC.
5. ALL UNDERGROUND UTILITIES SHALL BE COMPLETED PRIOR TO CONSTRUCTION OF LIMEROCK BASE.
6. ALL EXISTING PAVEMENT, CUT OR DAMAGED BY CONSTRUCTION, SHALL BE PROPERLY RESTORED AT THE CONTRACTOR'S EXPENSE.
7. WHERE ANY PROPOSED PAVEMENT IS TO BE CONNECTED TO EXISTING PAVEMENT, THE EXISTING EDGE OF PAVEMENT SHALL BE SAW CUT TO ENSURE A PROPER JOINT.
8. PRIOR TO THEIR CONSTRUCTION OR INSTALLATION, SHOP DRAWINGS SHALL BE SUBMITTED TO AND APPROVED BY THE ENGINEER OF RECORD. IT IS THE RESPONSIBILITY OF THE CONTRACTOR TO OBTAIN ALL OTHER AGENCY APPROVALS IF REQUIRED.

B. MATERIALS:

1. REINFORCED CONCRETE SLABS SHALL BE CONSTRUCTED OF CLASS I CONCRETE WITH A MINIMUM STRENGTH OF 4,000 PSI AND SHALL BE REINFORCED WITH A 6" x 6" NO. 6 GAUGE WIRE MESH.

C. INSTALLATION:

1. SUBGRADE FOR ROADWAY SHALL BE COMPACTED TO A MINIMUM OF 98% OF THE MAXIMUM DENSITY (AASHTO T-180), TO A MIN. 12" AND SHALL HAVE A MINIMUM LBR 40.
2. BASE COURSE MATERIAL FOR PAVED AREAS SHALL BE A MINIMUM THICKNESS OF 6" PLACED IN ONE LIFT. BASE COURSE MATERIAL SHALL HAVE A MINIMUM MARSHALL STABILITY OF 1000, UNLESS OTHERWISE INDICATED (OR LBR-100).
3. BASE COURSE SHALL BE COMPACTED TO 98% OF THE MAXIMUM DENSITY AS PER AASHTO T-180.
4. INSTALLATION OF THE WEARING SURFACE SHALL CONFORM WITH THE REQUIREMENTS OF THE D.O.T. STANDARD SPECIFICATIONS FOR TYPE S-III ASPHALTIC CONCRETE OR THE LATEST REVISION.

D. TESTING

1. THE FINISHED SURFACE OF THE BASE COURSE AND THAT OF THE WEARING SURFACE SHALL NOT VARY MORE THAN 1/4" FROM THE TEMPLATE. ANY IRREGULARITIES EXCEEDING THIS LIMIT SHALL BE CORRECTED.
2. DENSITY TESTS SHALL BE TAKEN BY AN INDEPENDENT TESTING LABORATORY CERTIFIED BY THE STATE OF FLORIDA, WHERE DIRECTED BY THE ENGINEER.
3. ALL TESTING COSTS (PAVING) SHALL BE PAID FOR BY THE CONTRACTOR.
4. DENSITY TESTS ON THE STABILIZED SUBGRADE SHALL BE SUPPLIED TO THE ENGINEER OF RECORD AND GEOTECHNICAL ENGINEER, AND APPROVED BEFORE ANY BASE IS CONSTRUCTED.
5. DENSITY TESTS AND "AS-BUILTS" ON THE FINISHED BASE SHALL BE SUPPLIED TO THE GEOTECHNICAL ENGINEER, AND APPROVED BEFORE ANY ASPHALT PAVEMENT IS CONSTRUCTED.

DATUM NOTE:

ELEVATIONS SHOWN HEREON ARE IN NORTH AMERICAN VERTICAL DATUM OF 1988.

10 5 2.5 0 10
1"=10'

BOHLER™ ENGINEERING
SITE CIVIL AND CONSULTING ENGINEERING
LAND SURVEYING
PROGRAM MANAGEMENT
LANDSCAPE ARCHITECTURE
SUSTAINABLE DESIGN
PERMITTING SERVICES
TRANSPORTATION SERVICES

"IN ACCORDANCE WITH THE CONTENT OF THIS PLAN, THE ENTIRE OR PARTS OF THIS PLAN MAY NOT BE COPIED OR USED FOR ANY PURPOSE WITHOUT PRIOR WRITTEN AUTHORIZATION FROM BOHLER ENGINEERING, INC. ANY REVISIONS TO THIS PLAN SHALL BE ISSUED BY THE CONTRACTOR IN WRITING."

REVISIONS

REV	DATE	COMMENT	DRAWN BY / CHECKED BY
1	2019-08-23	CITY OF DELRAY BEACH COMMENTS	LJL / AS
2	2019-09-10	SPRAB COMMENTS	LJL / AS

THIS DRAWING IS INTENDED FOR MUNICIPAL AND/OR AGENCY REVIEW AND APPROVAL. IT IS NOT INTENDED AS A CONSTRUCTION DOCUMENT UNLESS INDICATED OTHERWISE.

811 Know what's below. Call before you dig.

ALWAYS CALL 811

It's fast. It's free. It's the law.

ISSUED FOR MUNICIPAL & AGENCY REVIEW & APPROVAL

PROJECT No.:	FLB180120
DRAWN BY:	LJL
CHECKED BY:	AS
DATE:	2019-10-25
CAD I.D.:	FLB180120-GDP-1

PROJECT:

PIERRE DELRAY PHASE 1 - SPRAB SITE PLAN PACKAGE (AKA SUNTRUST BUILDING)

FOR

CLIENT

ZYSCOVICH ARCHITECTS

PROPOSED DEVELOPMENT

302 E ATLANTIC AVE
PALM BEACH COUNTY
DELRAY BEACH, FL

BOHLER ENGINEERING
2255 GLADES ROAD, SUITE 305E
BOCA RATON, FLORIDA 33431
Phone: (561) 571-0280
Fax: (561) 571-0281
FLORIDA BUSINESS CERT. OF AUTH. No. 30780
LANDSCAPE ARCHITECT BUSINESS LIC. No LC26000551

SHEET TITLE:

PAVING, GRADING AND DRAINAGE PLAN

SHEET NUMBER:

C-401

REVISION 2 - 2019-09-10

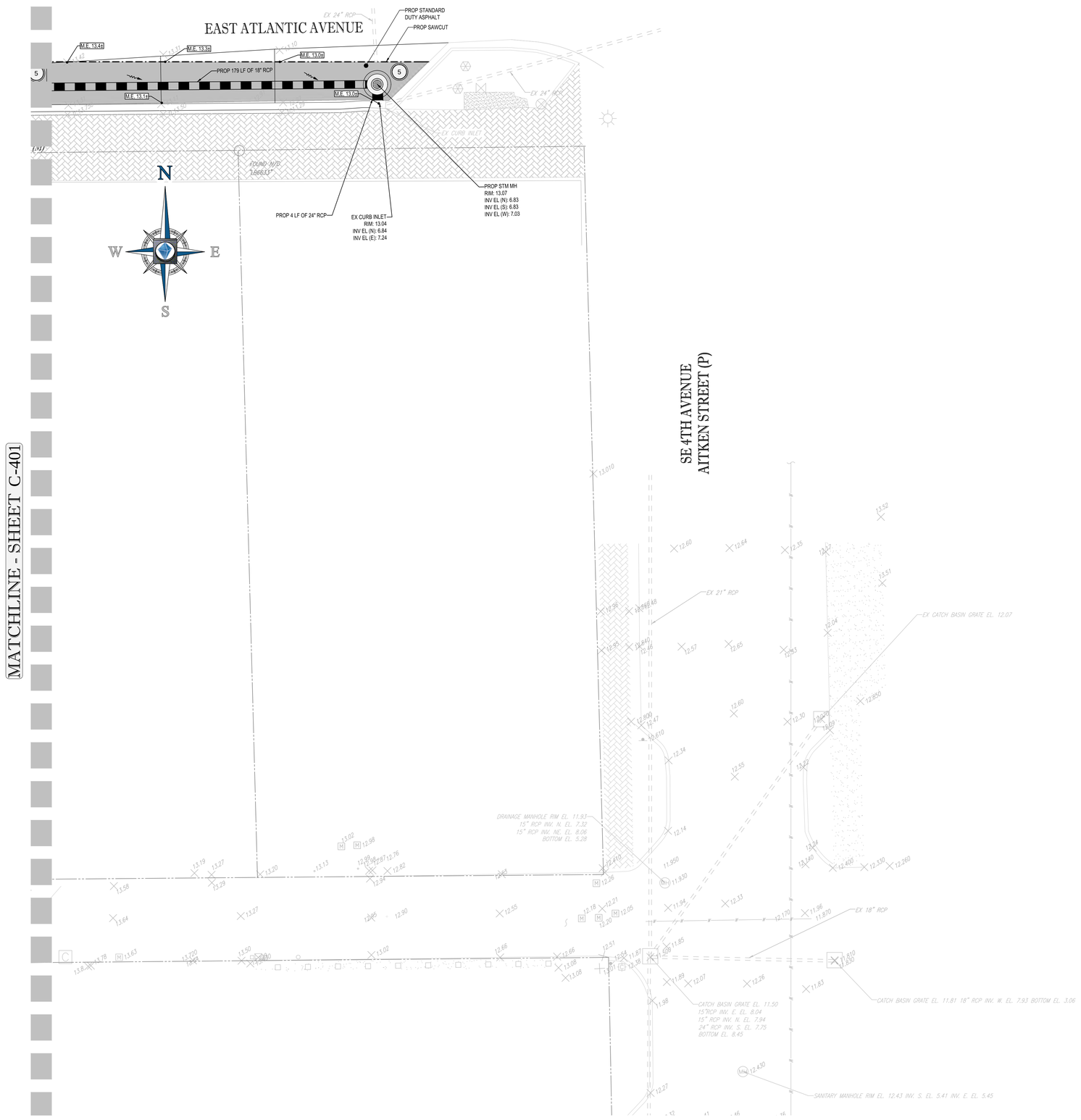

LEGEND:

- EX PROPERTY BOUNDARY LINES
- PROP PROPERTY BOUNDARY LINES
- EX STORM SEWER PIPE
- EX SPOT GRADE
- PROP SPOT GRADE
- PROP STANDARD ASPHALT
- PROP STANDARD CONCRETE
- PROP DRAINAGE ARROW
- PROP RIDGE LINE
- PROP DRAINAGE PIPE
- PROP STORM STRUCTURE

PAVING AND GRADING NOTES:

A. GENERAL:

1. ALL ELEVATIONS SHOWN ARE IN REFERENCE TO THE SURVEYOR'S BENCHMARKS AND MUST BE VERIFIED BY THE GENERAL CONTRACTOR PRIOR TO GROUNDBREAK.
2. ALL GRADES SHOWN REFERENCE PROPOSED ELEVATIONS AT EDGE OF PAVEMENT, UNLESS OTHERWISE NOTED. "TC" = TOP OF CURB ELEVATION; "BC" = BOTTOM OF CURB ELEVATION (EDGE OF PAVEMENT); "MATCH" = PROPOSED GRADE TO MATCH EXISTING GRADE; T/W = TOP OF RETAINING WALL ELEVATION; B/W = BOTTOM OF RETAINING WALL ELEVATION.
3. THE ALTA/ACSM LAND TITLE SURVEY SHALL BE CONSIDERED A PART OF THESE PLANS.
4. THE GEOTECHNICAL REPORT AND RECOMMENDATIONS SET FORTH THEREIN ARE A PART OF THE REQUIRED CONSTRUCTION DOCUMENTS AND IN CASE OF CONFLICT SHALL TAKE PRECEDENCE UNLESS SPECIFICALLY NOTED OTHERWISE ON THE PLANS. THE CONTRACTOR SHALL NOTIFY THE ENGINEER IN WRITING OF ANY SUCH DISCREPANCY BETWEEN GEOTECHNICAL REPORT AND PLANS, ETC.
5. ALL UNDERGROUND UTILITIES SHALL BE COMPLETED PRIOR TO CONSTRUCTION OF LIMEROCK BASE.
6. ALL EXISTING PAVEMENT, CUT OR DAMAGED BY CONSTRUCTION, SHALL BE PROPERLY RESTORED AT THE CONTRACTOR'S EXPENSE.
7. WHERE ANY PROPOSED PAVEMENT IS TO BE CONNECTED TO EXISTING PAVEMENT, THE EXISTING EDGE OF PAVEMENT SHALL BE SAW CUT TO ENSURE A PROPER JOINT.
8. PRIOR TO THEIR CONSTRUCTION OR INSTALLATION, SHOP DRAWINGS SHALL BE SUBMITTED TO AND APPROVED BY THE ENGINEER OF RECORD. IT IS THE RESPONSIBILITY OF THE CONTRACTOR TO OBTAIN ALL OTHER AGENCY APPROVALS IF REQUIRED.

B. MATERIALS:

1. REINFORCED CONCRETE SLABS SHALL BE CONSTRUCTED OF CLASS I CONCRETE WITH A MINIMUM STRENGTH OF 4,000 PSI AND SHALL BE REINFORCED WITH A 6" x 6" NO. 6 GAUGE WIRE MESH.

C. INSTALLATION:

1. SUBGRADE FOR ROADWAY SHALL BE COMPACTED TO A MINIMUM OF 98% OF THE MAXIMUM DENSITY (AASHTO T-180), TO A MIN. 12" AND SHALL HAVE A MINIMUM LBR 40.
2. BASE COURSE MATERIAL FOR PAVED AREAS SHALL BE A MINIMUM THICKNESS OF 6" PLACED IN ONE LIFT. BASE COURSE MATERIAL SHALL HAVE A MINIMUM MARSHALL STABILITY OF 1000, UNLESS OTHERWISE INDICATED (OR LBR-100).
3. BASE COURSE SHALL BE COMPACTED TO 98% OF THE MAXIMUM DENSITY AS PER AASHTO T-180.
4. INSTALLATION OF THE WEARING SURFACE SHALL CONFORM WITH THE REQUIREMENTS OF THE D.O.T. STANDARD SPECIFICATIONS FOR TYPE S-III ASPHALTIC CONCRETE OR THE LATEST REVISION.

D. TESTING

1. THE FINISHED SURFACE OF THE BASE COURSE AND THAT OF THE WEARING SURFACE SHALL NOT VARY MORE THAN 1/4" FROM THE TEMPLATE. ANY IRREGULARITIES EXCEEDING THIS LIMIT SHALL BE CORRECTED.
2. DENSITY TESTS SHALL BE TAKEN BY AN INDEPENDENT TESTING LABORATORY CERTIFIED BY THE STATE OF FLORIDA, WHERE DIRECTED BY THE ENGINEER.
3. ALL TESTING COSTS (PAVING) SHALL BE PAID FOR BY THE CONTRACTOR.
4. DENSITY TESTS ON THE STABILIZED SUBGRADE SHALL BE SUPPLIED TO THE ENGINEER OF RECORD AND GEOTECHNICAL ENGINEER, AND APPROVED BEFORE ANY BASE IS CONSTRUCTED.
5. DENSITY TESTS AND "AS-BUILTS" ON THE FINISHED BASE SHALL BE SUPPLIED TO THE GEOTECHNICAL ENGINEER, AND APPROVED BEFORE ANY ASPHALT PAVEMENT IS CONSTRUCTED.

DATUM NOTE:

ELEVATIONS SHOWN HEREON ARE IN NORTH AMERICAN VERTICAL DATUM OF 1988.

10 5 2.5 0 10
1"= 10'

BOHLER™ ENGINEERING
SITE CIVIL AND CONSULTING ENGINEERING
LAND SURVEYING
PROGRAM MANAGEMENT
LANDSCAPE ARCHITECTURE
SUSTAINABLE DESIGN
PERMITTING SERVICES
TRANSPORTATION SERVICES

"IN ACCEPTANCE, USE AND CONTENT OF THIS PLAN, THE CONTRACTOR AND ENGINEER AGREE THAT THE CONTRACTOR WILL NOT USE, REPRODUCE OR ALLOW USE OR REPRODUCTION OF THIS PLAN WITHOUT WRITTEN AUTHORIZATION FROM BOHLER ENGINEERING. ONLY PLANS BEARING THE ORIGINAL SEAL AND SIGNATURE OF THE ENGINEER OF RECORD SHALL BE UTILIZED FOR CONSTRUCTION PURPOSES."

REVISIONS

REV	DATE	COMMENT	DRAWN BY / CHECKED BY
1	2019-08-23	CITY OF DELRAY BEACH COMMENTS	LJL / AS
2	2019-09-10	SPRAB COMMENTS	LJL / AS

THIS DRAWING IS INTENDED FOR MUNICIPAL AND/OR AGENCY REVIEW AND APPROVAL. IT IS NOT INTENDED AS A CONSTRUCTION DOCUMENT UNLESS INDICATED OTHERWISE.

811 Know what's below. Call before you dig.
ALWAYS CALL 811
It's fast. It's free. It's the law.

ISSUED FOR MUNICIPAL & AGENCY REVIEW & APPROVAL

PROJECT No.:	FLB180120
DRAWN BY:	LJL
CHECKED BY:	AS
DATE:	2019-10-25
CAD I.D.:	FLB180120-GDP-1

PROJECT:
PIERRE DELRAY PHASE 1 - SPRAB SITE PLAN PACKAGE (AKA SUNTRUST BUILDING)

FOR

CLIENT
ZYSCOVICH ARCHITECTS

PROPOSED DEVELOPMENT
302 E ATLANTIC AVE
PALM BEACH COUNTY
DELRAY BEACH, FL

BOHLER ENGINEERING
2255 GLADES ROAD, SUITE 305E
BOCA RATON, FLORIDA 33431
Phone: (561) 571-0280
Fax: (561) 571-0281
FLORIDA BUSINESS CERT. OF AUTH. No. 30780
LANDSCAPE ARCHITECT BUSINESS LIC. No LC26000551

SHEET TITLE:
PAVING, GRADING AND DRAINAGE PLAN

SHEET NUMBER:
C-402

REVISION 2 - 2019-09-10

LEGEND:

- EX PROPERTY BOUNDARY LINES
- PROP PROPERTY BOUNDARY LINES
- EX STORM SEWER PIPE
- EX SPOT GRADE
- PROP SPOT GRADE
- PROP STANDARD ASPHALT
- PROP STANDARD CONCRETE
- PROP DRAINAGE ARROW
- PROP RIDGE LINE
- PROP DRAINAGE PIPE
- PROP STORM STRUCTURE

PAVING AND GRADING NOTES:

A. GENERAL:

1. ALL ELEVATIONS SHOWN ARE IN REFERENCE TO THE SURVEYOR'S BENCHMARKS AND MUST BE VERIFIED BY THE GENERAL CONTRACTOR PRIOR TO GROUNDBREAK.
2. ALL GRADES SHOWN REFERENCE PROPOSED ELEVATIONS AT EDGE OF PAVEMENT, UNLESS OTHERWISE NOTED. "TC" = TOP OF CURB ELEVATION; "BC" = BOTTOM OF CURB ELEVATION (EDGE OF PAVEMENT); "MATCH" = PROPOSED GRADE TO MATCH EXISTING GRADE; T/W = TOP OF RETAINING WALL ELEVATION; B/W = BOTTOM OF RETAINING WALL ELEVATION.
3. THE ALTA/ACSM LAND TITLE SURVEY SHALL BE CONSIDERED A PART OF THESE PLANS.
4. THE GEOTECHNICAL REPORT AND RECOMMENDATIONS SET FORTH THEREIN ARE A PART OF THE REQUIRED CONSTRUCTION DOCUMENTS AND IN CASE OF CONFLICT SHALL TAKE PRECEDENCE UNLESS SPECIFICALLY NOTED OTHERWISE ON THE PLANS. THE CONTRACTOR SHALL NOTIFY THE ENGINEER IN WRITING OF ANY SUCH DISCREPANCY BETWEEN GEOTECHNICAL REPORT AND PLANS, ETC.
5. ALL UNDERGROUND UTILITIES SHALL BE COMPLETED PRIOR TO CONSTRUCTION OF LIMEROCK BASE.
6. ALL EXISTING PAVEMENT, CUT OR DAMAGED BY CONSTRUCTION, SHALL BE PROPERLY RESTORED AT THE CONTRACTOR'S EXPENSE.
7. WHERE ANY PROPOSED PAVEMENT IS TO BE CONNECTED TO EXISTING PAVEMENT, THE EXISTING EDGE OF PAVEMENT SHALL BE SAW CUT TO ENSURE A PROPER JOINT.
8. PRIOR TO THEIR CONSTRUCTION OR INSTALLATION, SHOP DRAWINGS SHALL BE SUBMITTED TO AND APPROVED BY THE ENGINEER OF RECORD. IT IS THE RESPONSIBILITY OF THE CONTRACTOR TO OBTAIN ALL OTHER AGENCY APPROVALS IF REQUIRED.

B. MATERIALS:

1. REINFORCED CONCRETE SLABS SHALL BE CONSTRUCTED OF CLASS I CONCRETE WITH A MINIMUM STRENGTH OF 4,000 PSI AND SHALL BE REINFORCED WITH A 6" x 6" NO. 6 GAUGE WIRE MESH.

C. INSTALLATION:

1. SUBGRADE FOR ROADWAY SHALL BE COMPACTED TO A MINIMUM OF 98% OF THE MAXIMUM DENSITY (AASHTO T-180), TO A MIN. 12" AND SHALL HAVE A MINIMUM LBR 40.
2. BASE COURSE MATERIAL FOR PAVED AREAS SHALL BE A MINIMUM THICKNESS OF 6" PLACED IN ONE LIFT. BASE COURSE MATERIAL SHALL HAVE A MINIMUM MARSHALL STABILITY OF 1000, UNLESS OTHERWISE INDICATED (OR LBR-100).
3. BASE COURSE SHALL BE COMPACTED TO 98% OF THE MAXIMUM DENSITY AS PER AASHTO T-180.
4. INSTALLATION OF THE WEARING SURFACE SHALL CONFORM WITH THE REQUIREMENTS OF THE D.O.T. STANDARD SPECIFICATIONS FOR TYPE S-III ASPHALTIC CONCRETE OR THE LATEST REVISION.

D. TESTING

1. THE FINISHED SURFACE OF THE BASE COURSE AND THAT OF THE WEARING SURFACE SHALL NOT VARY MORE THAN 1/4" FROM THE TEMPLATE. ANY IRREGULARITIES EXCEEDING THIS LIMIT SHALL BE CORRECTED.
2. DENSITY TESTS SHALL BE TAKEN BY AN INDEPENDENT TESTING LABORATORY CERTIFIED BY THE STATE OF FLORIDA, WHERE DIRECTED BY THE ENGINEER.
3. ALL TESTING COSTS (PAVING) SHALL BE PAID FOR BY THE CONTRACTOR.
4. DENSITY TESTS ON THE STABILIZED SUBGRADE SHALL BE SUPPLIED TO THE ENGINEER OF RECORD AND GEOTECHNICAL ENGINEER, AND APPROVED BEFORE ANY BASE IS CONSTRUCTED.
5. DENSITY TESTS AND "AS-BUILTS" ON THE FINISHED BASE SHALL BE SUPPLIED TO THE GEOTECHNICAL ENGINEER, AND APPROVED BEFORE ANY ASPHALT PAVEMENT IS CONSTRUCTED.

DATUM NOTE:

ELEVATIONS SHOWN HEREON ARE IN NORTH AMERICAN VERTICAL DATUM OF 1988.

10 5 2.5 0 10
1"= 10'

BOHLER™ ENGINEERING
SITE CIVIL AND CONSULTING ENGINEERING
LAND SURVEYING
PROGRAM MANAGEMENT
LANDSCAPE ARCHITECTURE
SUSTAINABLE DESIGN
PERMITTING SERVICES
TRANSPORTATION SERVICES

"IN ACCEPTANCE, DESIGN AND CONTENT OF THIS PLAN THE ENGINEER DOES NOT BE EXPRESS OR IMPLIED CLAIMS OR GIVE WARRANTY WITHOUT WRITTEN AUTHORIZATION FROM BOHLER ENGINEERING. ONLY THE ORIGINAL SEALED PLANS SHALL BE UTILIZED FOR CONSTRUCTION PURPOSES

REVISIONS

REV	DATE	COMMENT	DRAWN BY / CHECKED BY
1	2019-08-23	CITY OF DELRAY BEACH COMMENTS	LJL / AS
2	2019-09-10	SPRAB COMMENTS	LJL / AS

THIS DRAWING IS INTENDED FOR MUNICIPAL AND/OR AGENCY REVIEW AND APPROVAL. IT IS NOT INTENDED AS A CONSTRUCTION DOCUMENT UNLESS INDICATED OTHERWISE.

811 Know what's below. Call before you dig.

ALWAYS CALL 811

It's fast. It's free. It's the law.

ISSUED FOR MUNICIPAL & AGENCY REVIEW & APPROVAL

PROJECT No.:	FLB180120
DRAWN BY:	LJL
CHECKED BY:	AS
DATE:	2019-10-25
CAD I.D.:	FLB180120-GDP-1

PROJECT:

PIERRE DELRAY PHASE 1 - SPRAB SITE PLAN PACKAGE (AKA SUNTRUST BUILDING)

FOR

CLIENT

ZYSCOVICH ARCHITECTS

PROPOSED DEVELOPMENT

302 E ATLANTIC AVE
PALM BEACH COUNTY
DELRAY BEACH, FL

BOHLER ENGINEERING
2255 GLADES ROAD, SUITE 305E
BOCA RATON, FLORIDA 33431
Phone: (561) 571-0280
Fax: (561) 571-0281
FLORIDA BUSINESS CERT. OF AUTH. No. 30780
LANDSCAPE ARCHITECT BUSINESS LIC. NO LC26000551

SHEET TITLE:

PAVING, GRADING AND DRAINAGE PLAN

SHEET NUMBER:

C-403

REVISION 2 - 2019-09-10

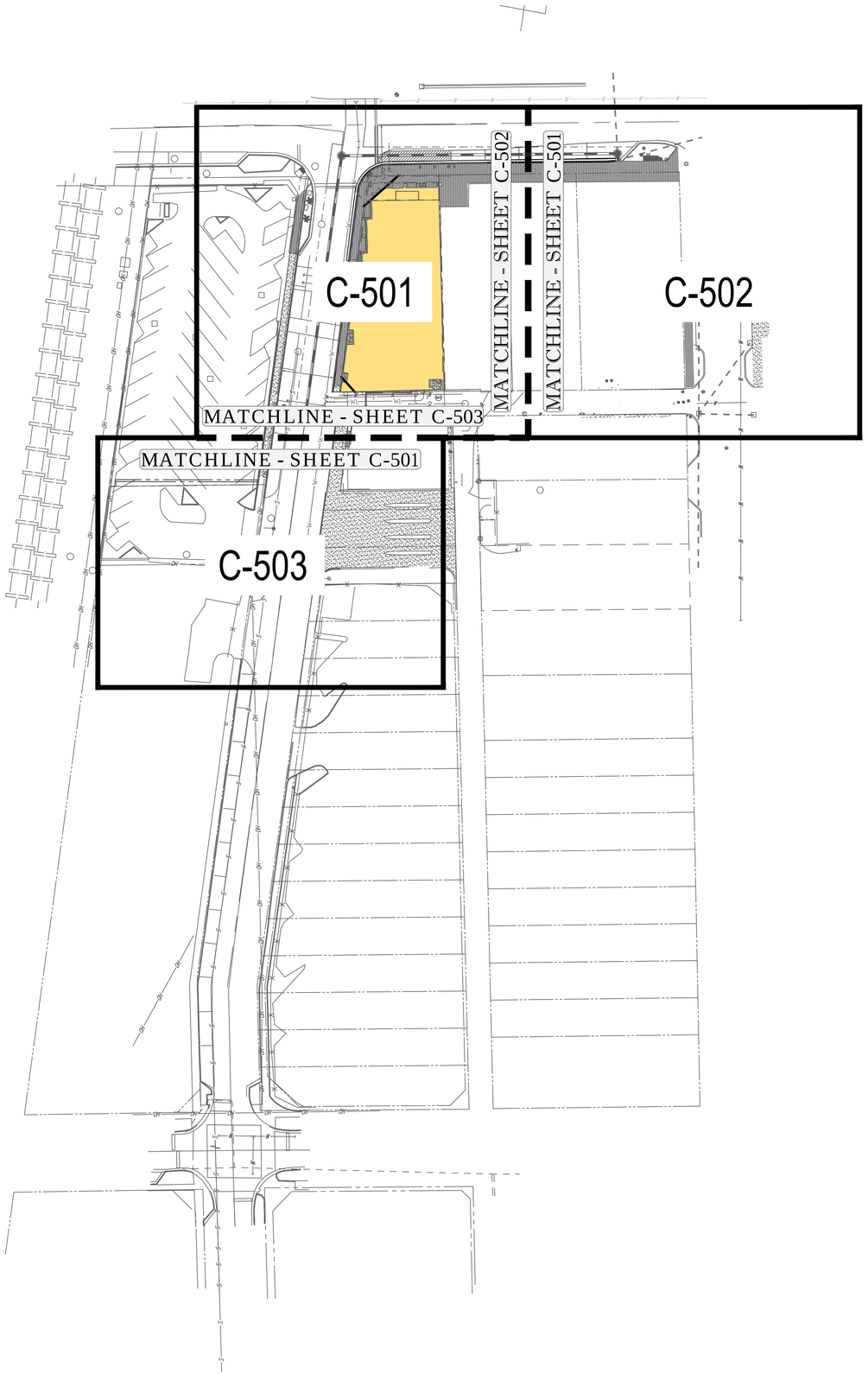

40 20 10 0 40
1"= 40'

BOHLER ENGINEERING

SITE CIVIL AND CONSULTING ENGINEERING
LAND SURVEYING
PROGRAM MANAGEMENT
LANDSCAPE ARCHITECTURE
SUSTAINABLE DESIGN
PERMITTING SERVICES
TRANSPORTATION SERVICES

THE INFORMATION, DESIGN AND CONTENT OF THIS PLAN ARE PROPRIETARY AND SHALL NOT BE COPIED OR USED FOR ANY PURPOSE WITHOUT PRIOR WRITTEN AUTHORIZATION FROM BOHLER ENGINEERING, INC. ALL REPRODUCTIONS, COPIES OR USES OF THIS PLAN AND ANY SUPPORTING DATA SHALL BE LIMITED TO THOSE EXPRESSLY AUTHORIZED BY BOHLER ENGINEERING, INC.

REVISIONS

REV	DATE	COMMENT	DRAWN BY / CHECKED BY
1	2019-08-23	CITY OF DELRAY BEACH COMMENTS	LJL / AS
2	2019-09-10	SPRAB COMMENTS	LJL / AS

THIS DRAWING IS INTENDED FOR MUNICIPAL AND/OR AGENCY REVIEW AND APPROVAL. IT IS NOT INTENDED AS A CONSTRUCTION DOCUMENT UNLESS INDICATED OTHERWISE.

811 Know what's below. Call before you dig.

ALWAYS CALL 811

It's fast. It's free. It's the law.

ISSUED FOR MUNICIPAL & AGENCY REVIEW & APPROVAL

PROJECT No.:	FLB180120
DRAWN BY:	LJL
CHECKED BY:	AS
DATE:	2019-10-25
CAD I.D.:	FLB180120-UTP-1

PROJECT:

PIERRE DELRAY PHASE 1 - SPRAB SITE PLAN PACKAGE (AKA SUNTRUST BUILDING)

FOR

CLIENT

ZYSCOVICH ARCHITECTS

PROPOSED DEVELOPMENT

302 E ATLANTIC AVE
PALM BEACH COUNTY
DELRAY BEACH, FL

BOHLER ENGINEERING
2255 GLADES ROAD, SUITE 305E
BOCA RATON, FLORIDA 33431
Phone: (561) 571-0280
Fax: (561) 571-0281
FLORIDA BUSINESS CERT. OF AUTH. No. 30780
LANDSCAPE ARCHITECT BUSINESS LIC. No LC26000551

SHEET TITLE:

UTILITY PLAN KEY SHEET

SHEET NUMBER:

C-500

REVISION 2 - 2019-09-10

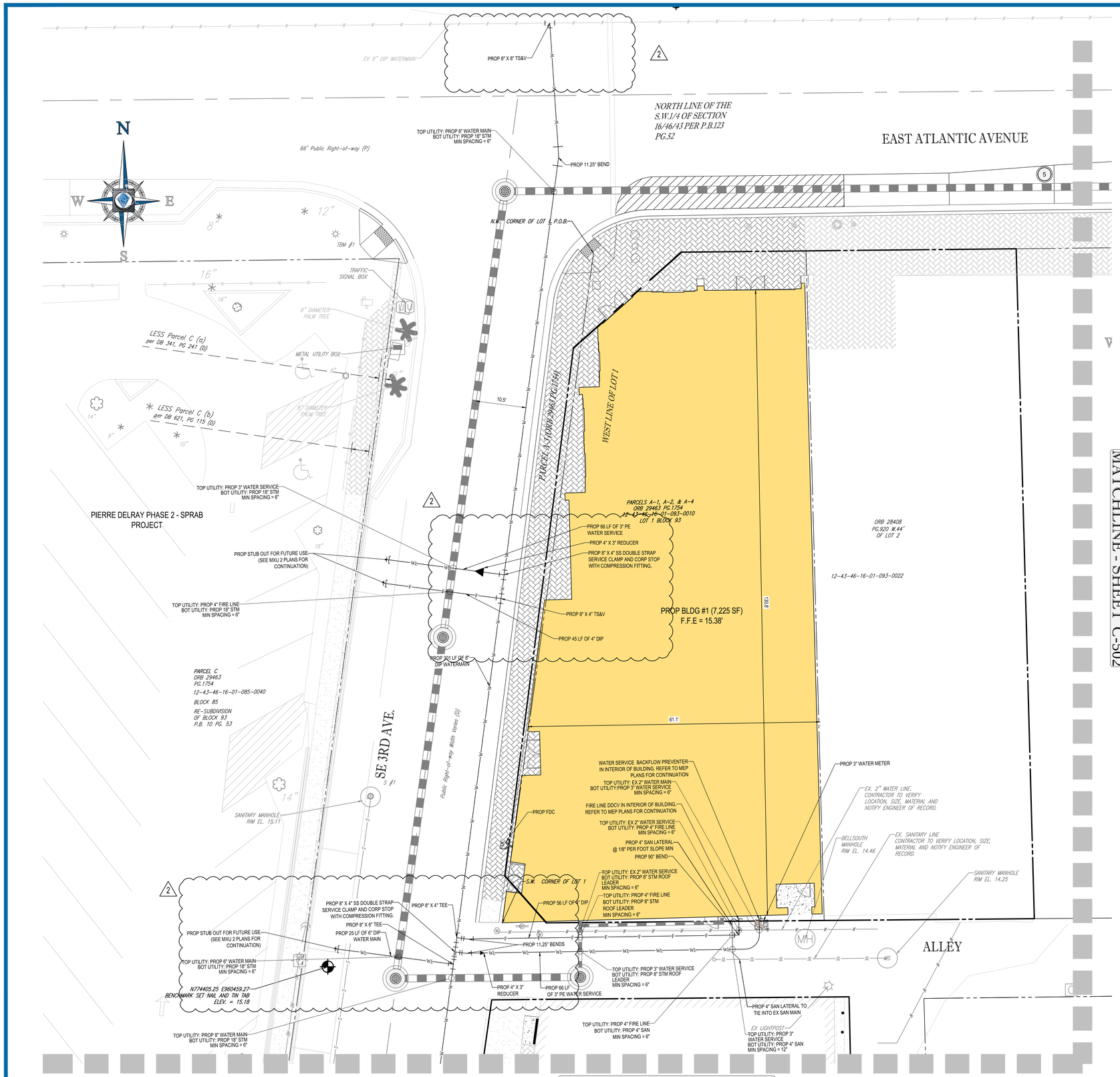

LEGEND:

- EX PROPERTY BOUNDARY LINES
- EX ADJACENT BOUNDARY LINES
- PROP PROPERTY BOUNDARY LINES
- EX STORM WATER LINE
- EX SANITARY SEWER LINE
- PROP UTILITY EASEMENT
- PROP SANITARY LINE
- PROP SANITARY LATERAL
- PROP WATER LINE
- PROP FIRE LINE
- PROP WATER SERVICE
- PROP ELECTRIC LINE
- PROP STORM SEWER
- PROP STORM STRUCTURES
- PROP SANITARY STRUCTURE

WATER DISTRIBUTION NOTES:

1. CONTRACTOR SHALL FOLLOW GUIDELINES AND PROCEDURES OUTLINED BY UTILITY PROVIDER, AND HAVE UTILITY PROVIDER'S MANUAL ON-SITE AT ALL TIMES. THIS POLICY MANUAL SHALL BE CONSIDERED PART OF THE CONSTRUCTION DOCUMENTS AS IT PERTAINS TO APPROVED MATERIALS, INSTALLATION METHODS, INSPECTION NOTIFICATION AND AS-BUILT/PROJECT CLOSEOUT REQUIREMENTS.
2. ALL HIGH DENSITY POLYETHYLENE PIPE AND FITTINGS SHALL MEET THE REQUIREMENTS OF AASHTO M - 294 LATEST REVISIONS. ALL PIPING TO BE NON-PERFORATED TUBING.
3. ALL PVC PIPE SHALL BE C900(SDR), AND ALL DIP PIPE SHALL BE C151 CLASS.
4. ALL WATER AND SEWER SYSTEM MATERIALS AND CONSTRUCTION SHALL BE IN ACCORDANCE WITH CITY OF DELRAY BEACH STANDARDS.
5. WATER AND SEWER MAIN HORIZONTAL AND VERTICAL SEPARATIONS SHALL COMPLY WITH PALM BEACH COUNTY CRITERIA/REQUIREMENTS, UNLESS OTHERWISE AGREED UPON BY THE CITY IN ADVANCE OF ANY APPLICABLE FIELD INSTALLATIONS.
6. ALL WATER MAINS SHALL BE INSTALLED WITH A MINIMUM PIPE COVER OF 36 INCHES FOR PVC AND 30 INCHES FOR DIP.
7. ALL DISINFECTION SHALL MEET DISINFECTION SPECS. (C651- 05) OR LATEST REVISION.
8. NO BENEFICIAL USE SHALL BE MADE OF THE PROPOSED WATER MAINS TO BE INSTALLED PER THIS PERMIT WITHOUT WRITTEN APPROVAL FROM THE FLORIDA DEPARTMENT OF HEALTH IN PALM BEACH COUNTY.
9. MIN. 12" VERTICAL SEPARATION REQUIRED BETWEEN WATER MAINS AND GAS, ELECTRIC, AND OTHER PUBLIC UTILITIES.

SANITARY SEWER NOTES:

1. MATERIALS:
   - A. ALL PVC SEWER PIPE AND FITTINGS SHALL BE NON-PRESSURE POLYVINYL CHLORIDE (PVC) PIPE CONFORMING TO ASTM D 3034, SDR 26, WITH PUSH-ON RUBBER GASKET JOINTS.
   - B. ALL FITTINGS AND ACCESSORIES SHALL BE AS MANUFACTURED OR SUPPLIED BY THE PIPE MANUFACTURER OR APPROVED EQUAL.
   - C. ALL SANITARY CLEANOUTS WITHIN PAVEMENT SHALL HAVE A LID THAT IS H20 LOADING.
2. INSTALLATION:
   - A. PIPE AND FITTINGS:
     1) SEWER PIPE SHALL BE INSTALLED IN ACCORDANCE WITH ASTM D2321, AND THE UNI-BELL PLASTICS PIPE ASSOCIATION'S "RECOMMENDED PRACTICE FOR THE INSTALLATION OF PVC SEWER PIPE".
     2) BEDDING AND INITIAL BACKFILL (12 INCHES) OVER SEWER MAINS AND SERVICES SHALL BE SAND WITH NO ROCK LARGER THAN 1" IN DIAMETER. 3/4" WASHED ROCK WILL BE USED IN WATER OR WHERE UNSUITABLE BEDDING EXISTS. ALL OTHER FILL SHALL NOT HAVE ROCK LARGER THAN 6" IN DIAMETER.
     3) SEWER PIPES SHALL BE INSTALLED WITH A MINIMUM OF 1% SLOPE.
   - B. CLEANOUTS:
     1) CLEANOUTS SHALL BE SET PLUMB TO LINE AND GRADE ON FIRM CLEAN SUBGRADE PROVIDING UNIFORM BEARING UNDER THE BASE.
     2) ALL OPENINGS AND JOINTS SHALL BE SEALED WATER-TIGHT.
   - C. SERVICE:
     1) MINIMUM SLOPE OF ALL SERVICE LINES SHALL BE 1.00%.
     2) EACH SERVICE CONNECTION SHALL BE PLUGGED WATER-TIGHT WITH AN APPROVED PLUG.
     3) CONNECTION OF SERVICES TO BUILDING'S PLUMBING SHALL BE COORDINATED WITH THE ARCHITECTURAL DRAWINGS.
3. TESTING:
   - A. AFTER CONSTRUCTION OF THE SEWER SYSTEM, THE ENGINEER MAY REQUIRE A VISUAL INFILTRATION AND/OR EXFILTRATION TEST TO BE PERFORMED ON THE ENTIRE SYSTEM OR ANY PART THEREOF.
   - B. AN AIR TEST MAY BE SUBSTITUTED FOR THE WATER EXFILTRATION TEST, UPON APPROVAL OF THE ENGINEER.
   - C. SEWER PIPE LEAKAGE ALLOWABLE SHALL NOT EXCEED 150 GALLONS PER DAY PER INCH DIAMETER PER MILE IN A TWO HOUR TEST PERIOD FOR ANY SECTION TESTED. NO VISIBLE LEAKAGE SHALL BE ALLOWED.
   - D. CONTRACTOR IS RESPONSIBLE FOR CORRECTING ANY DEFICIENCIES PRIOR TO THE CERTIFICATION TO ANY AGENCY.
   - E. GENERAL CONTRACTOR SHALL EMPLOY AN INDEPENDENT INSPECTOR FOR 100% CONTINUOUS INSPECTION OF THE BEDDING AND BACKFILL OPERATION. COMPACTION TESTS SHALL BE TAKEN AT THE BOTTOM OF TRENCH AND AT EACH LIFT OF BACKFILL.
   - F. GENERAL CONTRACTOR SHALL EMPLOY A LICENSED SURVEYOR ASOBUILT TOP OF PIPE ELEVATIONS TAKEN WHEN BEDDING OPERATION IS 75% COMPLETE. THESE ELEVATIONS SHALL BE TAKEN AT POINTS OF CONNECTION, CHANGES IN DIRECTION AND AT MINIMUM 20' INTERVALS ALONG THE LENGTH OF THE PIPE. THESE ELEVATIONS SHALL BE RECORDED AS AS-BUILT DIMENSIONS ON SITE PLAN REVIEW BY PROJECT ENGINEER.
   - G. ALL SANITARY LINES ARE TO BE FLUSHED PRIOR TO CONTRACTOR TURNOVER OF THE FACILITY.

10 5 2.5 0 10
1"= 10'

BOHLER™ ENGINEERING
SITE CIVIL AND CONSULTING ENGINEERING
LAND SURVEYING
PROGRAM MANAGEMENT
LANDSCAPE ARCHITECTURE
ENVIRONMENTAL STUDIES
PERMITTING SERVICES
TRANSPORTATION SERVICES

THE INFORMATION, DESIGN AND CONTENT OF THIS PLAN ARE PROPRIETARY AND SHALL NOT BE COPIED OR USED FOR ANY PURPOSE WITHOUT PRIOR WRITTEN AUTHORIZATION FROM BOHLER ENGINEERING. ONLY THE ORIGINAL PLAN IS AUTHORIZED FOR CONSTRUCTION PURPOSES.

REVISIONS

REV	DATE	COMMENT	DRAWN BY / CHECKED BY
1	2019-08-23	CITY OF DELRAY BEACH COMMENTS	LJL / AS
2	2019-09-10	SPRAB COMMENTS	LJL / AS

THIS DRAWING IS INTENDED FOR MUNICIPAL AND/OR AGENCY REVIEW AND APPROVAL. IT IS NOT INTENDED AS A CONSTRUCTION DOCUMENT UNLESS INDICATED OTHERWISE.

811 Know what's below. Call before you dig.
ALWAYS CALL 811
It's fast. It's free. It's the law.

ISSUED FOR MUNICIPAL & AGENCY REVIEW & APPROVAL

PROJECT No.:	FLB180120
DRAWN BY:	LJL
CHECKED BY:	AS
DATE:	2019-10-25
CAD I.D.:	FLB180120-UTP-1

PROJECT:
PIERRE DELRAY PHASE 1 - SPRAB SITE PLAN PACKAGE (AKA SUNTRUST BUILDING)

FOR

CLIENT
ZYSCOVICH ARCHITECTS

PROPOSED DEVELOPMENT
302 E ATLANTIC AVE
PALM BEACH COUNTY
DELRAY BEACH, FL

BOHLER ENGINEERING
2255 GLADES ROAD, SUITE 305E
BOCA RATON, FLORIDA 33431
Phone: (561) 571-0280
Fax: (561) 571-0281
FLORIDA BUSINESS CERT. OF AUTH. No. 30780
LANDSCAPE ARCHITECT BUSINESS LIC. No LC26000551

SHEET TITLE:
UTILITY PLAN

SHEET NUMBER:
C-501

REVISION 2 - 2019-09-10

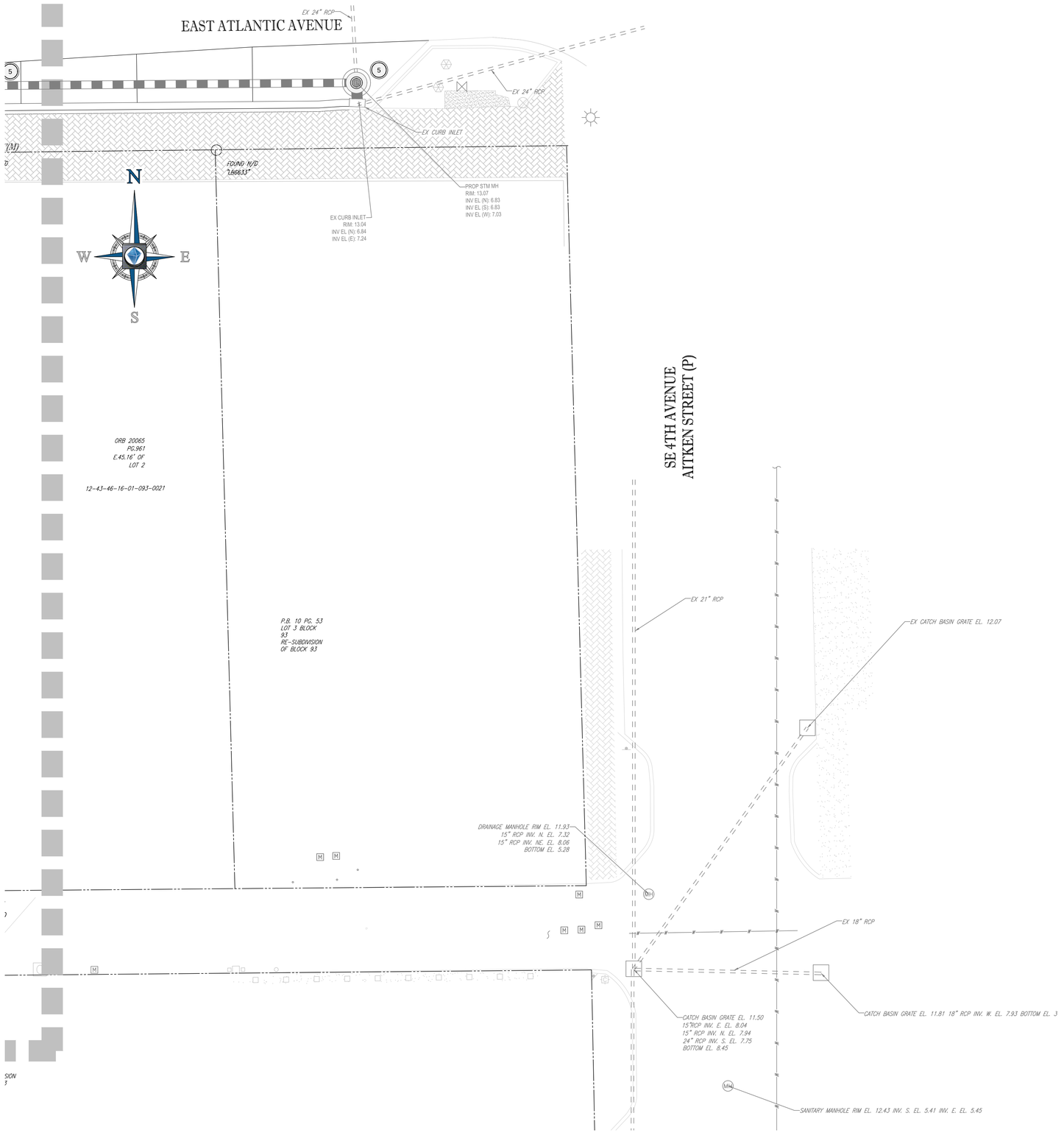

LEGEND:

- EX PROPERTY BOUNDARY LINES
- EX ADJACENT BOUNDARY LINES
- PROP PROPERTY BOUNDARY LINES
- EX STORM WATER LINE
- EX SANITARY SEWER LINE
- PROP UTILITY EASEMENT
- PROP SANITARY LINE
- PROP SANITARY LATERAL
- PROP WATER LINE
- PROP FIRE LINE
- PROP WATER SERVICE
- PROP ELECTRIC LINE
- PROP STORM SEWER
- PROP EXFILTRATION TRENCH
- PROP STORM STRUCTURES
- PROP SANITARY STRUCTURE

WATER DISTRIBUTION NOTES:

1. CONTRACTOR SHALL FOLLOW GUIDELINES AND PROCEDURES OUTLINED BY UTILITY PROVIDER, AND HAVE UTILITY PROVIDER'S MANUAL ON-SITE AT ALL TIMES. THIS POLICY MANUAL SHALL BE CONSIDERED PART OF THE CONSTRUCTION DOCUMENTS AS IT PERTAINS TO APPROVED MATERIALS, INSTALLATION METHODS, INSPECTION NOTIFICATION AND AS-BUILT/PROJECT CLOSEOUT REQUIREMENTS.
2. ALL HIGH DENSITY POLYETHYLENE PIPE AND FITTINGS SHALL MEET THE REQUIREMENTS OF AASHTO M - 294 LATEST REVISIONS. ALL PIPING TO BE NON-PERFORATED TUBING.
3. ALL PVC PIPE SHALL BE C900(SDR), AND ALL DIP PIPE SHALL BE C151 CLASS.
4. ALL WATER AND SEWER SYSTEM MATERIALS AND CONSTRUCTION SHALL BE IN ACCORDANCE WITH CITY OF DELRAY BEACH STANDARDS.
5. WATER AND SEWER MAIN HORIZONTAL AND VERTICAL SEPARATIONS SHALL COMPLY WITH PALM BEACH COUNTY CRITERIA/REQUIREMENTS, UNLESS OTHERWISE AGREED UPON BY THE CITY IN ADVANCE OF ANY APPLICABLE FIELD INSTALLATIONS.
6. ALL WATER MAINS SHALL BE INSTALLED WITH A MINIMUM PIPE COVER OF 36 INCHES FOR PVC AND 30 INCHES FOR DIP.
7. ALL DISINFECTION SHALL MEET DISINFECTION SPECS. (C651- 05) OR LATEST REVISION.
8. NO BENEFICIAL USE SHALL BE MADE OF THE PROPOSED WATER MAINS TO BE INSTALLED PER THIS PERMIT WITHOUT WRITTEN APPROVAL FROM THE FLORIDA DEPARTMENT OF HEALTH IN PALM BEACH COUNTY.
9. MIN. 12" VERTICAL SEPARATION REQUIRED BETWEEN WATER MAINS AND GAS, ELECTRIC, AND OTHER PUBLIC UTILITIES.

SANITARY SEWER NOTES:

1. MATERIALS:
   - A. ALL PVC SEWER PIPE AND FITTINGS SHALL BE NON-PRESSURE POLYVINYL CHLORIDE (PVC) PIPE CONFORMING TO ASTM D 3034, SDR 26, WITH PUSH-ON RUBBER GASKET JOINTS.
   - B. ALL FITTINGS AND ACCESSORIES SHALL BE AS MANUFACTURED OR SUPPLIED BY THE PIPE MANUFACTURER OR APPROVED EQUAL.
   - C. ALL SANITARY CLEANOUTS WITHIN PAVEMENT SHALL HAVE A LID THAT IS H20 LOADING.
2. INSTALLATION:
   - A. PIPE AND FITTINGS:
     1) SEWER PIPE SHALL BE INSTALLED IN ACCORDANCE WITH ASTM D2321, AND THE UNI-BELL PLASTICS PIPE ASSOCIATIONS "RECOMMENDED PRACTICE FOR THE INSTALLATION OF PVC SEWER PIPE".
     2) BEDDING AND INITIAL BACKFILL (12 INCHES) OVER SEWER MAINS AND SERVICES SHALL BE SAND WITH NO ROCK LARGER THAN 1" IN DIAMETER. 3/4" WASHED ROCK WILL BE USED IN WATER OR WHERE UNSUITABLE BEDDING EXISTS. ALL OTHER FILL SHALL NOT HAVE ROCK LARGER THAN 6" IN DIAMETER.
     3) SEWER PIPES SHALL BE INSTALLED WITH A MINIMUM OF 1% SLOPE.
   - B. CLEANOUTS:
     1) CLEANOUTS SHALL BE SET PLUMB TO LINE AND GRADE ON FIRM CLEAN SUBGRADE PROVIDING UNIFORM BEARING UNDER THE BASE.
     2) ALL OPENINGS AND JOINTS SHALL BE SEALED WATER-TIGHT.
   - C. SERVICE:
     1) MINIMUM SLOPE OF ALL SERVICE LINES SHALL BE 1.00%.
     2) EACH SERVICE CONNECTION SHALL BE PLUGGED WATER-TIGHT WITH AN APPROVED PLUG.
     3) CONNECTION OF SERVICES TO BUILDING'S PLUMBING SHALL BE COORDINATED WITH THE ARCHITECTURAL DRAWINGS.
3. TESTING:
   - A. AFTER CONSTRUCTION OF THE SEWER SYSTEM, THE ENGINEER MAY REQUIRE A VISUAL INFILTRATION AND/OR EXFILTRATION TEST TO BE PERFORMED ON THE ENTIRE SYSTEM OR ANY PART THEREOF.
   - B. AN AIR TEST MAY BE SUBSTITUTED FOR THE WATER EXFILTRATION TEST, UPON APPROVAL OF THE ENGINEER.
   - C. SEWER PIPE LEAKAGE ALLOWABLE SHALL NOT EXCEED 150 GALLONS PER DAY PER INCH DIAMETER PER MILE IN A TWO HOUR TEST PERIOD FOR ANY SECTION TESTED. NO VISIBLE LEAKAGE SHALL BE ALLOWED.
   - D. CONTRACTOR IS RESPONSIBLE FOR CORRECTING ANY DEFICIENCIES PRIOR TO THE CERTIFICATION TO ANY AGENCY.
   - E. GENERAL CONTRACTOR SHALL EMPLOY AN INDEPENDENT INSPECTOR FOR 100% CONTINUOUS INSPECTION OF THE BEDDING AND BACKFILL OPERATION. COMPACTION TESTS SHALL BE TAKEN AT THE BOTTOM OF TRENCH AND AT EACH LIFT OF BACKFILL.
   - F. GENERAL CONTRACTOR SHALL EMPLOY A LICENSED SURVEYOR AS0BUILT TOP OF PIPE ELEVATIONS TAKEN WHEN BEDDING OPERATION IS 75% COMPLETE. THESE ELEVATIONS SHALL BE TAKEN AT POINTS OF CONNECTION, CHANGES IN DIRECTION AND AT MINIMUM 20' INTERVALS ALONG THE LENGTH OF THE PIPE. THESE ELEVATIONS SHALL BE RECORDED AS AS-BUILT DIMENSIONS ON SITE PLAN REVIEW BY PROJECT ENGINEER.
   - G. ALL SANITARY LINES ARE TO BE FLUSHED PRIOR TO CONTRACTOR TURNOVER OF THE FACILITY.

BOHLER ENGINEERING
SITE CIVIL AND CONSULTING ENGINEERING
LAND SURVEYING
PROGRAM MANAGEMENT
LANDSCAPE ARCHITECTURE
SUSTAINABLE DESIGN
PERMITTING SERVICES
TRANSPORTATION SERVICES

THE INFORMATION, DESIGN AND CONTENT OF THIS PLAN ARE PROPRIETARY AND SHALL NOT BE COPIED OR USED FOR ANY PURPOSE WITHOUT PRIOR WRITTEN AUTHORIZATION FROM BOHLER ENGINEERING. ONLY THE PLANS AND SPECIFICATIONS SIGNED AND SEALED BY A LICENSED PROFESSIONAL ENGINEER SHALL BE UTILIZED FOR CONSTRUCTION PURPOSES.

REVISIONS

REV	DATE	COMMENT	DRAWN BY / CHECKED BY
1	2019-08-23	CITY OF DELRAY BEACH COMMENTS	LJL / AS
2	2019-09-10	SPRAB COMMENTS	LJL / AS

THIS DRAWING IS INTENDED FOR MUNICIPAL AND/OR AGENCY REVIEW AND APPROVAL. IT IS NOT INTENDED AS A CONSTRUCTION DOCUMENT UNLESS INDICATED OTHERWISE.

811 Know what's below. Call before you dig.

ALWAYS CALL 811

It's fast. It's free. It's the law.

ISSUED FOR MUNICIPAL & AGENCY REVIEW & APPROVAL

PROJECT No.:	FLB180120
DRAWN BY:	LJL
CHECKED BY:	AS
DATE:	2019-10-25
CAD I.D.:	FLB180120-UTP-1

PROJECT:

PIERRE DELRAY PHASE 1 - SPRAB SITE PLAN PACKAGE (AKA SUNTRUST BUILDING)

FOR

CLIENT

ZYSCOVICH ARCHITECTS

PROPOSED DEVELOPMENT

302 E ATLANTIC AVE
PALM BEACH COUNTY
DELRAY BEACH, FL

BOHLER ENGINEERING
2255 GLADES ROAD, SUITE 305E
BOCA RATON, FLORIDA 33431
Phone: (561) 571-0280
Fax: (561) 571-0281
FLORIDA BUSINESS CERT. OF AUTH. No. 30780
LANDSCAPE ARCHITECT BUSINESS LIC. No LC26000551

SHEET TITLE:

UTILITY PLAN

SHEET NUMBER:

C-502

REVISION 2 - 2019-09-10

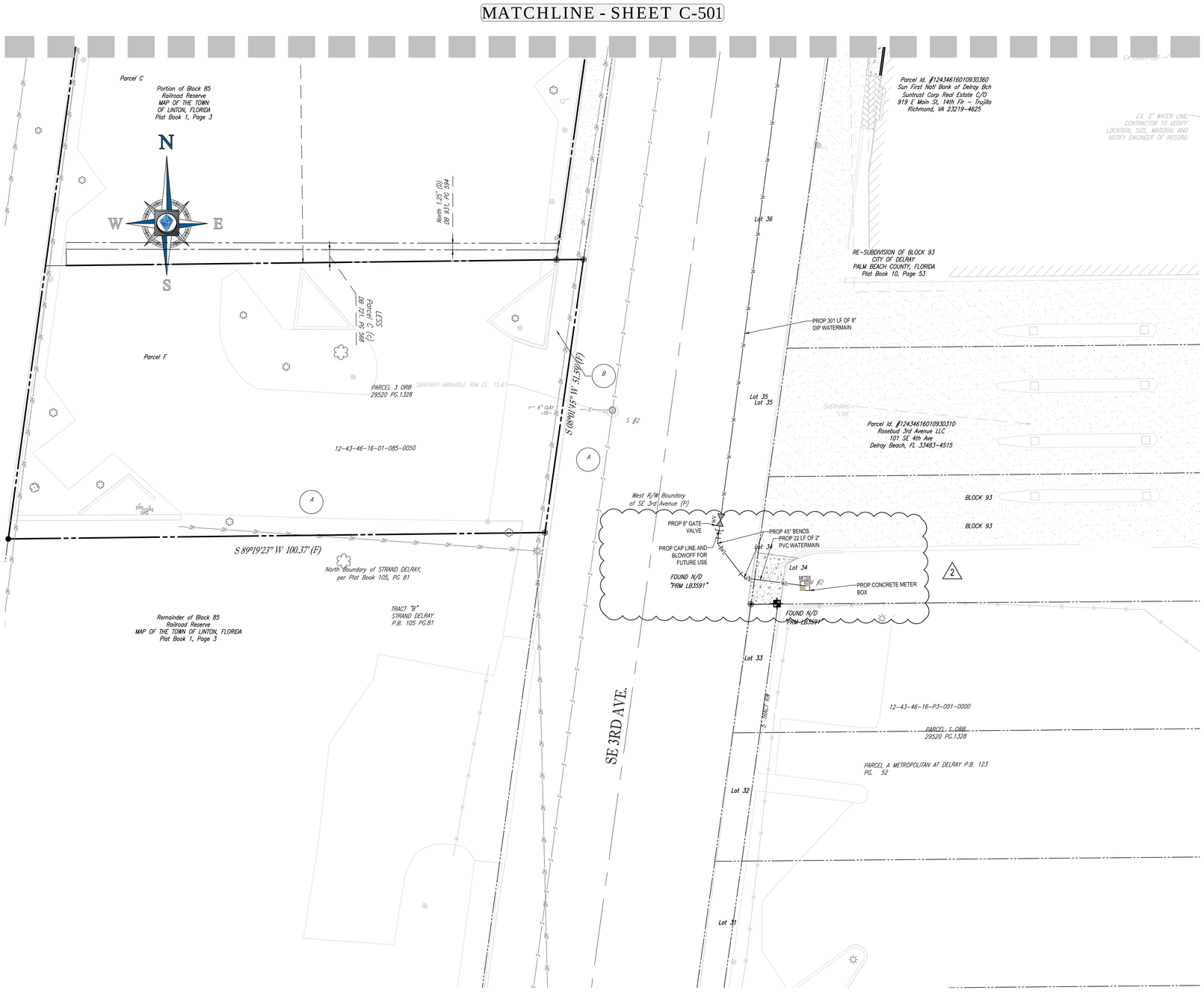

LEGEND:

- EX PROPERTY BOUNDARY LINES
- EX ADJACENT BOUNDARY LINES
- PROP PROPERTY BOUNDARY LINES
- EX STORM WATER LINE
- EX SANITARY SEWER LINE
- PROP UTILITY EASEMENT
- PROP SANITARY LINE
- PROP SANITARY LATERAL
- PROP WATER LINE
- PROP FIRE LINE
- PROP WATER SERVICE
- PROP ELECTRIC LINE
- PROP STORM SEWER
- PROP EXFILTRATION TRENCH
- PROP STORM STRUCTURES
- PROP SANITARY STRUCTURE

WATER DISTRIBUTION NOTES:

1. CONTRACTOR SHALL FOLLOW GUIDELINES AND PROCEDURES OUTLINED BY UTILITY PROVIDER, AND HAVE UTILITY PROVIDER'S MANUAL ON-SITE AT ALL TIMES. THIS POLICY MANUAL SHALL BE CONSIDERED PART OF THE CONSTRUCTION DOCUMENTS AS IT PERTAINS TO APPROVED MATERIALS, INSTALLATION METHODS, INSPECTION NOTIFICATION AND AS-BUILT/PROJECT CLOSEOUT REQUIREMENTS.
2. ALL HIGH DENSITY POLYETHYLENE PIPE AND FITTINGS SHALL MEET THE REQUIREMENTS OF AASHTO M - 294 LATEST REVISIONS. ALL PIPING TO BE NON-PERFORATED TUBING.
3. ALL PVC PIPE SHALL BE C900(SDR), AND ALL DIP PIPE SHALL BE C151 CLASS.
4. ALL WATER AND SEWER SYSTEM MATERIALS AND CONSTRUCTION SHALL BE IN ACCORDANCE WITH CITY OF DELRAY BEACH STANDARDS.
5. WATER AND SEWER MAIN HORIZONTAL AND VERTICAL SEPARATIONS SHALL COMPLY WITH PALM BEACH COUNTY CRITERIA/REQUIREMENTS, UNLESS OTHERWISE AGREED UPON BY THE CITY IN ADVANCE OF ANY APPLICABLE FIELD INSTALLATIONS.
6. ALL WATER MAINS SHALL BE INSTALLED WITH A MINIMUM PIPE COVER OF 36 INCHES FOR PVC AND 30 INCHES FOR DIP.
7. ALL DISINFECTION SHALL MEET DISINFECTION SPECS. (C651- 05) OR LATEST REVISION.
8. NO BENEFICIAL USE SHALL BE MADE OF THE PROPOSED WATER MAINS TO BE INSTALLED PER THIS PERMIT WITHOUT WRITTEN APPROVAL FROM THE FLORIDA DEPARTMENT OF HEALTH IN PALM BEACH COUNTY.
9. MIN. 12" VERTICAL SEPARATION REQUIRED BETWEEN WATER MAINS AND GAS, ELECTRIC, AND OTHER PUBLIC UTILITIES.

SANITARY SEWER NOTES:

1. MATERIALS:
   - A. ALL PVC SEWER PIPE AND FITTINGS SHALL BE NON-PRESSURE POLYVINYL CHLORIDE (PVC) PIPE CONFORMING TO ASTM D 3034, SDR 26, WITH PUSH-ON RUBBER GASKET JOINTS.
   - B. ALL FITTINGS AND ACCESSORIES SHALL BE AS MANUFACTURED OR SUPPLIED BY THE PIPE MANUFACTURER OR APPROVED EQUAL.
   - C. ALL SANITARY CLEANOUTS WITHIN PAVEMENT SHALL HAVE A LID THAT IS H20 LOADING.
2. INSTALLATION:
   - A. PIPE AND FITTINGS:
     1) SEWER PIPE SHALL BE INSTALLED IN ACCORDANCE WITH ASTM D2321, AND THE UNI-BELL PLASTICS PIPE ASSOCIATION'S "RECOMMENDED PRACTICE FOR THE INSTALLATION OF PVC SEWER PIPE".
     2) BEDDING AND INITIAL BACKFILL (12 INCHES) OVER SEWER MAINS AND SERVICES SHALL BE SAND WITH NO ROCK LARGER THAN 1" IN DIAMETER. 3/4" WASHED ROCK WILL BE USED IN WATER OR WHERE UNSUITABLE BEDDING EXISTS. ALL OTHER FILL SHALL NOT HAVE ROCK LARGER THAN 6" IN DIAMETER.
     3) SEWER PIPES SHALL BE INSTALLED WITH A MINIMUM OF 1% SLOPE.
   - B. CLEANOUTS:
     1) CLEANOUTS SHALL BE SET PLUMB TO LINE AND GRADE ON FIRM CLEAN SUBGRADE PROVIDING UNIFORM BEARING UNDER THE BASE.
     2) ALL OPENINGS AND JOINTS SHALL BE SEALED WATER-TIGHT.
   - C. SERVICE:
     1) MINIMUM SLOPE OF ALL SERVICE LINES SHALL BE 1.00%.
     2) EACH SERVICE CONNECTION SHALL BE PLUGGED WATER-TIGHT WITH AN APPROVED PLUG.
     3) CONNECTION OF SERVICES TO BUILDING'S PLUMBING SHALL BE COORDINATED WITH THE ARCHITECTURAL DRAWINGS.
3. TESTING:
   - A. AFTER CONSTRUCTION OF THE SEWER SYSTEM, THE ENGINEER MAY REQUIRE A VISUAL INFILTRATION AND/OR EXFILTRATION TEST TO BE PERFORMED ON THE ENTIRE SYSTEM OR ANY PART THEREOF.
   - B. AN AIR TEST MAY BE SUBSTITUTED FOR THE WATER EXFILTRATION TEST, UPON APPROVAL OF THE ENGINEER.
   - C. SEWER PIPE LEAKAGE ALLOWABLE SHALL NOT EXCEED 150 GALLONS PER DAY PER INCH DIAMETER PER MILE IN A TWO HOUR TEST PERIOD FOR ANY SECTION TESTED. NO VISIBLE LEAKAGE SHALL BE ALLOWED.
   - D. CONTRACTOR IS RESPONSIBLE FOR CORRECTING ANY DEFICIENCIES PRIOR TO THE CERTIFICATION TO ANY AGENCY.
   - E. GENERAL CONTRACTOR SHALL EMPLOY AN INDEPENDENT INSPECTOR FOR 100% CONTINUOUS INSPECTION OF THE BEDDING AND BACKFILL OPERATION. COMPACTION TESTS SHALL BE TAKEN AT THE BOTTOM OF TRENCH AND AT EACH LIFT OF BACKFILL.
   - F. GENERAL CONTRACTOR SHALL EMPLOY A LICENSED SURVEYOR AS0BUILT TOP OF PIPE ELEVATIONS TAKEN WHEN BEDDING OPERATION IS 75% COMPLETE. THESE ELEVATIONS SHALL BE TAKEN AT POINTS OF CONNECTION, CHANGES IN DIRECTION AND AT MINIMUM 20' INTERVALS ALONG THE LENGTH OF THE PIPE. THESE ELEVATIONS SHALL BE RECORDED AS AS-BUILT DIMENSIONS ON SITE PLAN REVIEW BY PROJECT ENGINEER.
   - G. ALL SANITARY LINES ARE TO BE FLUSHED PRIOR TO CONTRACTOR TURNOVER OF THE FACILITY.

10 5 2.5 0 10
1"=10'

BOHLER™ ENGINEERING
SITE CIVIL AND CONSULTING ENGINEERING
LAND SURVEYING
PROGRAM MANAGEMENT
LANDSCAPE ARCHITECTURE
SUSTAINABLE DESIGN
PERMITTING SERVICES
TRANSPORTATION SERVICES

THE INFORMATION, DESIGN AND CONTENT OF THIS PLAN ARE PROPRIETARY AND SHALL NOT BE COPIED OR USED FOR ANY PURPOSE WITHOUT PRIOR WRITTEN AUTHORIZATION FROM BOHLER ENGINEERING. ONLY THOSE PLANS OR PORTIONS THEREOF MARKED FOR CONSTRUCTION SHALL BE UTILIZED FOR CONSTRUCTION PURPOSES.
© BOHLER ENGINEERING

REVISIONS

REV	DATE	COMMENT	DRAWN BY / CHECKED BY
1	2019-08-23	CITY OF DELRAY BEACH COMMENTS	LJL / AS
2	2019-09-10	SPRAB COMMENTS	LJL / AS

THIS DRAWING IS INTENDED FOR MUNICIPAL AND/OR AGENCY REVIEW AND APPROVAL. IT IS NOT INTENDED AS A CONSTRUCTION DOCUMENT UNLESS INDICATED OTHERWISE.

811 Know what's below. Call before you dig.
ALWAYS CALL 811
It's fast. It's free. It's the law.

ISSUED FOR MUNICIPAL & AGENCY REVIEW & APPROVAL

PROJECT No.:	FLB180120
DRAWN BY:	LJL
CHECKED BY:	AS
DATE:	2019-10-25
CAD I.D.:	FLB180120-UTP-1

PROJECT:
PIERRE DELRAY PHASE 1 - SPRAB SITE PLAN PACKAGE (AKA SUNTRUST BUILDING)
FOR
CLIENT
ZYSCOVICH ARCHITECTS
PROPOSED DEVELOPMENT
302 E ATLANTIC AVE
PALM BEACH COUNTY
DELRAY BEACH, FL

BOHLER ENGINEERING
2255 GLADES ROAD, SUITE 305E
BOCA RATON, FLORIDA 33431
Phone: (561) 571-0280
Fax: (561) 571-0281
FLORIDA BUSINESS CERT. OF AUTH. No. 30780
LANDSCAPE ARCHITECT BUSINESS LIC. No LC26000551

SHEET TITLE:
UTILITY PLAN

SHEET NUMBER:
C-503

REVISION 2 - 2019-09-10

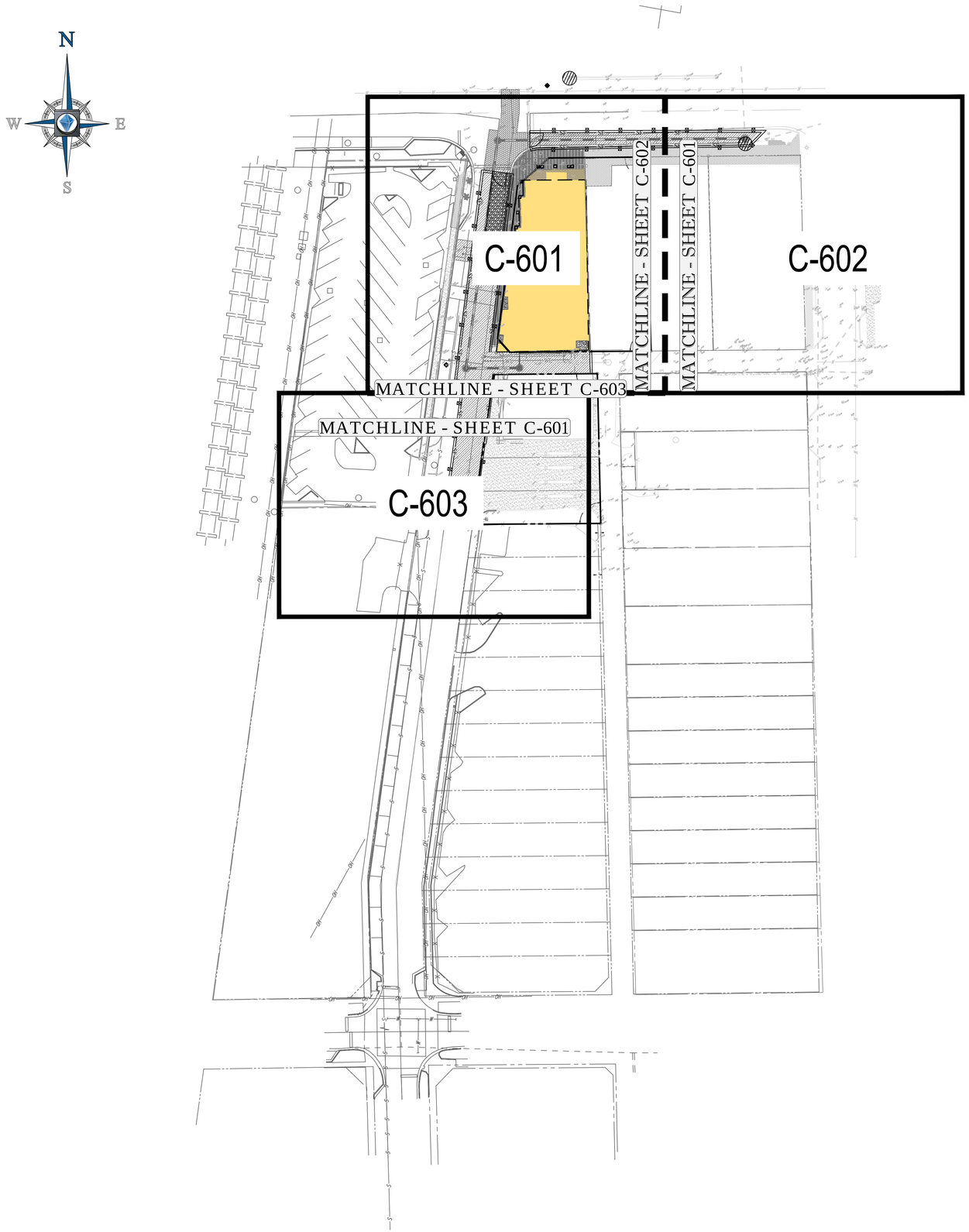

40 20 10 0 40
1"= 40'

BOHLER ENGINEERING

SITE CIVIL AND CONSULTING ENGINEERING
LAND SURVEYING
PROGRAM MANAGEMENT
LANDSCAPE ARCHITECTURE
SUSTAINABLE DESIGN
PERMITTING SERVICES
TRANSPORTATION SERVICES

THE INFORMATION, DESIGN AND CONTENT OF THIS PLAN ARE PROPRIETARY AND SHALL NOT BE COPIED OR USED FOR ANY PURPOSE WITHOUT PRIOR WRITTEN AUTHORIZATION FROM BOHLER ENGINEERING, INC. ELECTRONIC FILES MAY BE UTILIZED FOR CONSTRUCTION PURPOSES BY PERSONS AUTHORIZED BY BOHLER ENGINEERING.

REVISIONS

REV	DATE	COMMENT	DRAWN BY / CHECKED BY
1	2019-08-23	CITY OF DELRAY BEACH COMMENTS	LJL / AS
2	2019-09-10	SPRAB COMMENTS	LJL / AS

THIS DRAWING IS INTENDED FOR MUNICIPAL AND/OR AGENCY REVIEW AND APPROVAL. IT IS NOT INTENDED AS A CONSTRUCTION DOCUMENT UNLESS INDICATED OTHERWISE.

811 Know what's below. Call before you dig.

ALWAYS CALL 811

It's fast. It's free. It's the law.

ISSUED FOR MUNICIPAL & AGENCY REVIEW & APPROVAL

PROJECT No.:	FLB180120
DRAWN BY:	LJL
CHECKED BY:	AS
DATE:	2019-10-25
CAD I.D.:	FLB180120-OAP-1

PROJECT:

PIERRE DELRAY PHASE 1 - SPRAB SITE PLAN PACKAGE (AKA SUNTRUST BUILDING)

FOR

CLIENT

ZYSCOVICH ARCHITECTS

PROPOSED DEVELOPMENT

302 E ATLANTIC AVE
PALM BEACH COUNTY
DELRAY BEACH, FL

BOHLER ENGINEERING
2255 GLADES ROAD, SUITE 305E
BOCA RATON, FLORIDA 33431
Phone: (561) 571-0280
Fax: (561) 571-0281
FLORIDA BUSINESS CERT. OF AUTH. No. 30780
LANDSCAPE ARCHITECT BUSINESS LIC. No.LC26000551

SHEET TITLE:

EROSION AND SEDIMENTATION CONTROL PLAN KEY SHEET

SHEET NUMBER:

C-600

REVISION 2 - 2019-09-10

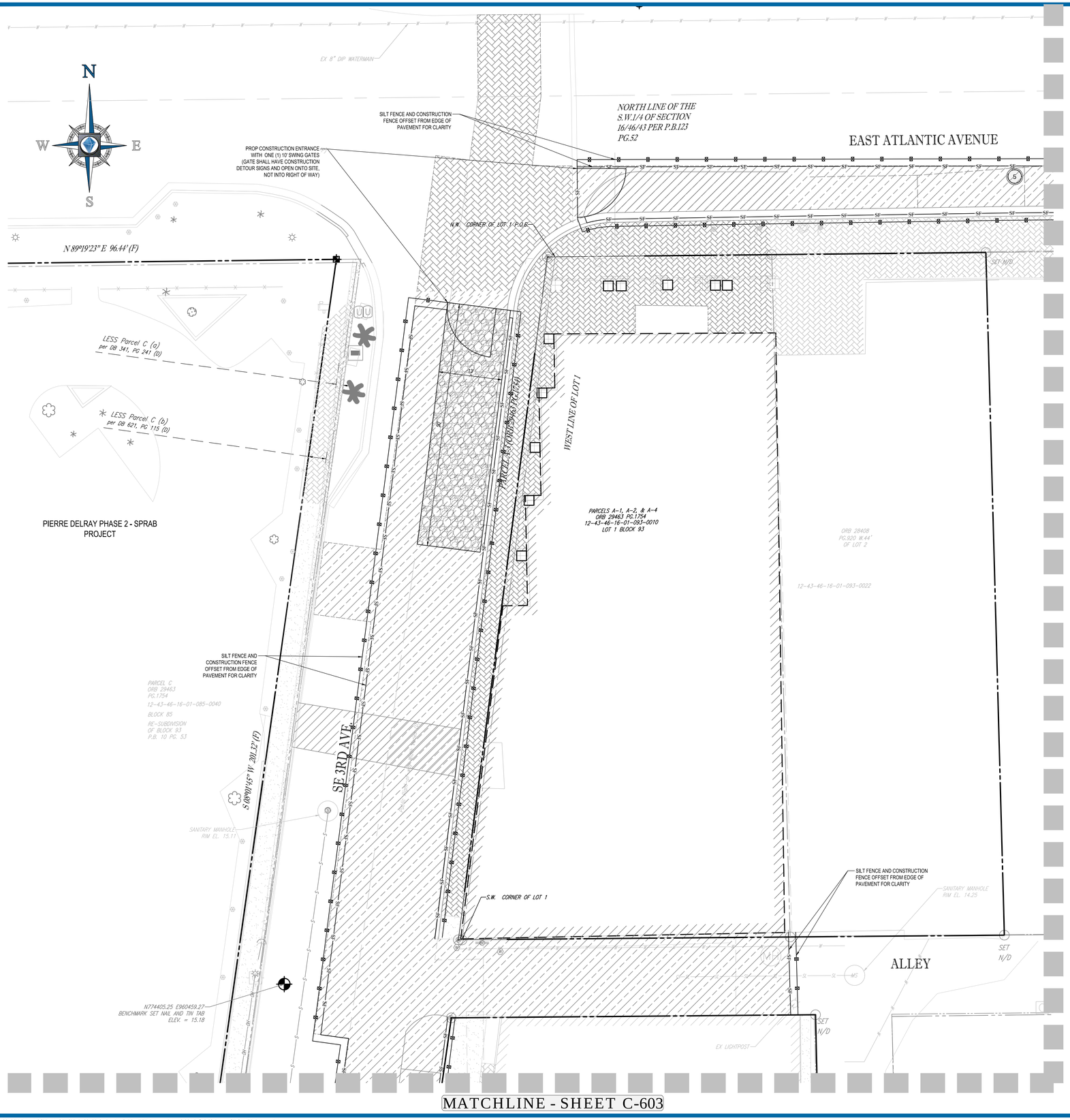

LEGEND:

- PROPERTY LINE
- EXIST. DRAINAGE STRUCTURES
- EXIST. STORM SEWER
- PROP SILT FENCE
- PROP CONSTRUCTION FENCE
- PROP SOIL TRACKING PREVENTION MAT
- PROP INLET PROTECTION

POLLUTION PREVENTION NOTES:

1. EROSION AND SEDIMENT CONTROL BMP'S IN ADDITION TO THOSE PRESENTED ON THESE PLANS SHALL BE IMPLEMENTED AS NECESSARY TO PREVENT TURBID DISCHARGES FROM FLOWING ONTO ADJACENT PROPERTIES OR ROADWAYS, OFF SITE STORMWATER CONVEYANCES OR RECEIVING WATERS, OR ON SITE WETLANDS AND SURFACE WATERS. BMP'S SHALL BE DESIGNED, INSTALLED, AND MAINTAINED BY THE SITE OPERATOR TO ENSURE THAT OFF SITE SURFACE WATER QUALITY REMAINS CONSISTENT WITH STATE AND LOCAL REGULATIONS. [THE OPERATOR IS THE ENTITY THAT OWNS OR OPERATES THE CONSTRUCTION ACTIVITY AND HAS AUTHORITY TO CONTROL THOSE ACTIVITIES AT THE PROJECT NECESSARY TO ENSURE COMPLIANCE.]

2. OFF SITE SURFACE WATER DISCHARGES, OR DISCHARGES TO ONSITE WETLANDS OR SURFACE WATERS WITH TURBIDITY IN EXCESS OF 29 NEPHELOMETRIC TURBIDITY UNITS (NTU'S) ABOVE BACKGROUND LEVEL SHALL BE IMMEDIATELY CORRECTED. SUCH INCIDENTS SHALL BE REPORTED TO WATER RESOURCES WITHIN 24 HOURS OF THE OCCURRENCE. THE REPORT SHALL INCLUDE THE CAUSE OF THE DISCHARGE AND CORRECTIVE ACTIONS TAKEN.

3. THE OPERATOR SHALL ENSURE THAT ADJACENT PROPERTIES ARE NOT IMPACTED BY WIND EROSION, OR EMISSIONS OF UNCONFINED PARTICULATE MATTER IN ACCORDANCE WITH RULE 62-296.320(4)(C)1, F.A.C., BY TAKING APPROPRIATE MEASURES TO STABILIZE AFFECTED AREAS.

4. FUEL AND OTHER PETROLEUM PRODUCT SPILLS THAT ENTER STORMWATER DRAINS OR WATERBODIES, OR FUEL AND OTHER PETROLEUM PRODUCT SPILLS THAT ARE IN EXCESS OF 25 GALLONS SHALL BE CONTAINED, CLEANED UP, AND IMMEDIATELY REPORTED TO WATER RESOURCES. SMALLER GROUND SURFACE SPILLS SHALL BE CLEANED UP AS SOON AS PRACTICAL.

5. IF CONTAMINATED SOIL AND/OR GROUNDWATER IS DISCOVERED DURING DEVELOPMENT OF THE SITE, ALL ACTIVITY IN THE VICINITY OF THE CONTAMINATION SHALL IMMEDIATELY CEASE, AND WATER RESOURCES SHALL BE CONTACTED.

6. PRIOR TO DEMOLITION OF EXISTING ON SITE STRUCTURES AN ASBESTOS SURVEY AND/OR ASBESTOS NOTIFICATION MAY BE REQUIRED.

7. NATIONAL POLLUTANT DISCHARGE ELIMINATION SYSTEM:
   - A. NPDES CONSTRUCTION GENERIC PERMIT COVERAGE SHALL BE OBTAINED AT LEAST 48 HOURS IN ADVANCE OF CONSTRUCTION COMMENCEMENT IN ACCORDANCE WITH RULE 62-621.300(4)(a), F.A.C.
   - B. A COPY OF THE CERTIFIED NPDES NOI, OR A COPY OF THE FDEP COVERAGE CONFIRMATION LETTER SHALL BE POSTED AT THE SITE IN ACCORDANCE WITH RULE 62-621.300(4)(A) PART III.C.2, F.A.C.
   - C. A COPY OF THE CERTIFIED NPDES NOI, OR A COPY OF THE FDEP COVERAGE CONFIRMATION LETTER SHALL BE PROVIDED TO WATER RESOURCES IN ACCORDANCE WITH RULE 62-621.300(4)(a)PART III.D.1, F.A.C.
   - D. THE SWPPP SHALL BE CERTIFIED IN ACCORDANCE WITH RULE 62-621.300(4)(a)PART V.D.6, F.A.C.
   - E. A COPY OF THE SWPPP, AND COPIES OF THE INSPECTION AND MAINTENANCE RECORDS SHALL BE MAINTAINED AT THE PROJECT SITE, AND SHALL BE READILY AVAILABLE TO COUNTY OR STATE INSPECTORS.

8. THE DISCHARGE OF GROUNDWATER PRODUCED THROUGH DEWATERING, TO SURFACE WATERS, OR ANY PORTION OF THE MS4 WILL REQUIRE SEPARATE PERMITTING FROM THE FLORIDA DEPARTMENT OF ENVIRONMENTAL PROTECTION (DEP). PERMIT(S) SHALL BE OBTAINED PRIOR TO THE COMMENCEMENT OF DEWATERING.

MAINTENANCE NOTES:

N.P.D.E.S. PERMIT COMPLIANCE REQUIRES INSPECTIONS EVERY 7 CALENDAR DAYS BY A NPDES QUALIFIED INSPECTOR AND PERIODIC INSPECTIONS WITHIN 24 HOURS OF ANY RAINFALL EVENT OF 0.5 INCHES OR GREATER. THESE INSPECTIONS MAY RESULT IN RECOMMENDATIONS FOR ROUTINE MAINTENANCE OF THE SOIL EROSION CONTROL DEVICES, AS WELL AS FURTHER MAINTENANCE AS OUTLINED BELOW.

1. THROUGHOUT THE CONSTRUCTION PERIOD, ALL MUD/SILT TRACKED ONTO EXISTING FDOT ROADS FROM THE SITE DUE TO CONSTRUCTION SHALL BE IMMEDIATELY REMOVED BY THE CONTRACTOR.

2. CATCH BASIN INLET AND CONCRETE FLUME FILTERS SHALL BE MAINTAINED CLEAN AT ALL TIMES THROUGHOUT THE CONSTRUCTION PERIOD. WEEKLY INSPECTIONS WILL BE PERFORMED EVERY 7 CALENDAR DAYS. IF A FILTER HAS HOLES OR IS INUNDATED WITH SEDIMENT, THE FILTER WILL REQUIRE REPLACEMENT.

3. CONSTRUCTION ACCESS AND TRACKING MAT MUST BE MAINTAINED AS NECESSARY. REPLENISH CRUSHED AGGREGATE IF PRESENT LAYER IS FILLED WITH SEDIMENT, POOLING WATER OR HAS RUTS. A NEW LAYER MAY BE ADDED IF OLD LAYERS BECOME COMPACTED.

4. SILT FENCE IS TO BE INSPECTED DAILY BY CONTRACTOR AND EVERY 7 CALENDAR DAYS BY NPDES QUALIFIED INSPECTOR. IF REPAIRS OR REPLACEMENT IS NECESSARY, IT SHALL BE PERFORMED IMMEDIATELY. THE SILT FENCE SHOULD BE TRENCHED IN, BACK-FILLED, AND STAPLED OR STAKED ACCORDING TO THE MANUFACTURER'S SPECIFICATIONS. MAINTENANCE INCLUDES THE REMOVING OF BUILT-UP SEDIMENT. WHEN THE SEDIMENT ACCUMULATES TO 1/3 OF THE HEIGHT OF THE FENCE, CONTRACTOR MAY HAVE TO REMOVE, REPLACE, RETRENCH, OR RE-BACKFILL THE FENCE IF-IT FAILS. IT WOULD ALSO BE NECESSARY TO REINSTALL IF ANY PORTION OF THE FENCING WAS DAMAGED BY CONSTRUCTION MACHINERY.

5. SEEDING OR RESEEDING MAY BE REQUIRED IMMEDIATELY TO AREAS WHICH HAVE BEEN DAMAGED BY RUNOFF.

6. REMOVE ANY VISIBLE SEDIMENT FROM THE POND BOTTOM TO KEEP THE BASIN DESIGNED INFILTRATION PERFORMANCE

7. THE CONTRACTOR SHALL CONTINUOUSLY ENSURE THAT THE PERIMETER OF THE SITE, INCLUDING CONSTRUCTION ENTRANCES, IS SECURED FROM ALLOWING DEBRIS TO LEAVE THE SITE DUE TO CONSTRUCTION ACTIVITY OR RAINFALL EVENTS. A WEEKLY LOG SHALL BE UPDATED AND KEPT ON-SITE IN ACCORDANCE WITH THE NPDES PERMIT. BY BIDDING DOCUMENTS CONTRACTOR ACKNOWLEDGES HE/SHE IS AWARE OF NPDES GUIDELINES AND POLICIES AS WELL AS BEST MANAGEMENT PRACTICES AND ASSUMES SOLE RESPONSIBILITY FOR FINES IMPOSED BY GOVERNMENTAL AGENCIES DUE TO VIOLATIONS.

10 5 2.5 0 10
1"= 10'

BOHLER™ ENGINEERING
SITE CIVIL AND CONSULTING ENGINEERING
LAND SURVEYING
PROGRAM MANAGEMENT
LANDSCAPE ARCHITECTURE
SUSTAINABLE DESIGN
PERMITTING SERVICES
TRANSPORTATION SERVICES

THE INFORMATION, DESIGN AND CONTENT OF THIS PLAN ARE PROPRIETARY AND SHALL NOT BE COPIED OR USED FOR ANY PURPOSE WITHOUT PRIOR WRITTEN AUTHORIZATION FROM BOHLER ENGINEERING. ONLY THOSE PLANS OR PORTIONS THEREOF MARKED FOR CONSTRUCTION SHALL BE UTILIZED FOR CONSTRUCTION PURPOSES.

REVISIONS

REV	DATE	COMMENT	DRAWN BY / CHECKED BY
1	2019-08-23	CITY OF DELRAY BEACH COMMENTS	LJL / AS
2	2019-09-10	SPRAB COMMENTS	LJL / AS

THIS DRAWING IS INTENDED FOR MUNICIPAL AND/OR AGENCY REVIEW AND APPROVAL. IT IS NOT INTENDED AS A CONSTRUCTION DOCUMENT UNLESS INDICATED OTHERWISE.

811 Know what's below. Call before you dig.
ALWAYS CALL 811
It's fast. It's free. It's the law.

ISSUED FOR MUNICIPAL & AGENCY REVIEW & APPROVAL

PROJECT No.:	FLB180120
DRAWN BY:	LJL
CHECKED BY:	AS
DATE:	2019-10-25
CAD I.D.:	FLB180120-OAP-1

PROJECT:

PIERRE DELRAY PHASE 1 - SPRAB SITE PLAN PACKAGE (AKA SUNTRUST BUILDING)

FOR

CLIENT

ZYSCOVICH ARCHITECTS

PROPOSED DEVELOPMENT

302 E ATLANTIC AVE
PALM BEACH COUNTY
DELRAY BEACH, FL

BOHLER ENGINEERING
2255 GLADES ROAD, SUITE 305E
BOCA RATON, FLORIDA 33431
Phone: (561) 571-0280
Fax: (561) 571-0281
FLORIDA BUSINESS CERT. OF AUTH. No. 30780
LANDSCAPE ARCHITECT BUSINESS LIC. No LC26000551

SHEET TITLE:

EROSION AND SEDIMENTATION CONTROL PLAN PHASE I

SHEET NUMBER:

C-601

REVISION 2 - 2019-09-10

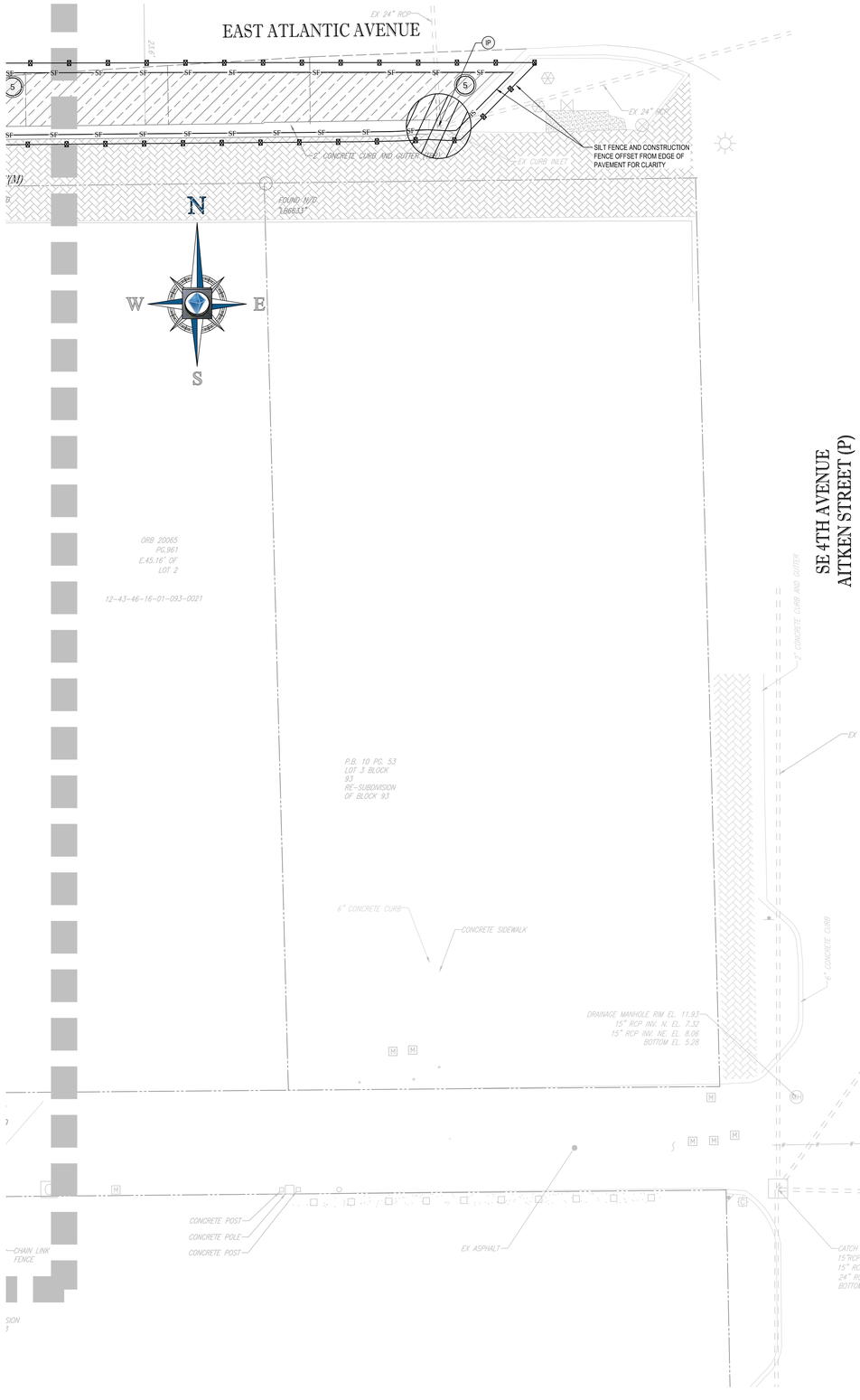

MATCHLINE - SHEET C-601

LEGEND:

- PROPERTY LINE
- EXIST. DRAINAGE STRUCTURES
- EXIST. STORM SEWER
- SF — SF — PROP SILT FENCE
- PROP CONSTRUCTION FENCE
- PROP SOIL TRACKING PREVENTION MAT
- PROP INLET PROTECTION

POLLUTION PREVENTION NOTES:

1. EROSION AND SEDIMENT CONTROL BMP'S IN ADDITION TO THOSE PRESENTED ON THESE PLANS SHALL BE IMPLEMENTED AS NECESSARY TO PREVENT TURBID DISCHARGES FROM FLOWING ONTO ADJACENT PROPERTIES OR ROADWAYS, OFF SITE STORMWATER CONVEYANCES OR RECEIVING WATERS, OR ON SITE WETLANDS AND SURFACE WATERS. BMP'S SHALL BE DESIGNED, INSTALLED, AND MAINTAINED BY THE SITE OPERATOR TO ENSURE THAT OFF SITE SURFACE WATER QUALITY REMAINS CONSISTENT WITH STATE AND LOCAL REGULATIONS. [THE OPERATOR IS THE ENTITY THAT OWNS OR OPERATES THE CONSTRUCTION ACTIVITY AND HAS AUTHORITY TO CONTROL THOSE ACTIVITIES AT THE PROJECT NECESSARY TO ENSURE COMPLIANCE.]

2. OFF SITE SURFACE WATER DISCHARGES, OR DISCHARGES TO ONSITE WETLANDS OR SURFACE WATERS WITH TURBIDITY IN EXCESS OF 29 NEPHELOMETRIC TURBIDITY UNITS (NTU'S) ABOVE BACKGROUND LEVEL SHALL BE IMMEDIATELY CORRECTED. SUCH INCIDENTS SHALL BE REPORTED TO WATER RESOURCES WITHIN 24 HOURS OF THE OCCURRENCE. THE REPORT SHALL INCLUDE THE CAUSE OF THE DISCHARGE AND CORRECTIVE ACTIONS TAKEN.

3. THE OPERATOR SHALL ENSURE THAT ADJACENT PROPERTIES ARE NOT IMPACTED BY WIND EROSION, OR EMISSIONS OF UNCONFINED PARTICULATE MATTER IN ACCORDANCE WITH RULE 62-296.320(4)(C)1, F.A.C., BY TAKING APPROPRIATE MEASURES TO STABILIZE AFFECTED AREAS.

4. FUEL AND OTHER PETROLEUM PRODUCT SPILLS THAT ENTER STORMWATER DRAINS OR WATERBODIES, OR FUEL AND OTHER PETROLEUM PRODUCT SPILLS THAT ARE IN EXCESS OF 25 GALLONS SHALL BE CONTAINED, CLEANED UP, AND IMMEDIATELY REPORTED TO WATER RESOURCES. SMALLER GROUND SURFACE SPILLS SHALL BE CLEANED UP AS SOON AS PRACTICAL.

5. IF CONTAMINATED SOIL AND/OR GROUNDWATER IS DISCOVERED DURING DEVELOPMENT OF THE SITE, ALL ACTIVITY IN THE VICINITY OF THE CONTAMINATION SHALL IMMEDIATELY CEASE, AND WATER RESOURCES SHALL BE CONTACTED.

6. PRIOR TO DEMOLITION OF EXISTING ON SITE STRUCTURES AN ASBESTOS SURVEY AND/OR ASBESTOS NOTIFICATION MAY BE REQUIRED.

7. NATIONAL POLLUTANT DISCHARGE ELIMINATION SYSTEM:
   A. NPDES CONSTRUCTION GENERIC PERMIT COVERAGE SHALL BE OBTAINED AT LEAST 48 HOURS IN ADVANCE OF CONSTRUCTION COMMENCEMENT IN ACCORDANCE WITH RULE 62-621.300(4)(a), F.A.C.
   B. A COPY OF THE CERTIFIED NPDES NOI, OR A COPY OF THE FDEP COVERAGE CONFIRMATION LETTER SHALL BE POSTED AT THE SITE IN ACCORDANCE WITH RULE 62-621.300(4)(A) PART III.C.2, F.A.C.
   C. A COPY OF THE CERTIFIED NPDES NOI, OR A COPY OF THE FDEP COVERAGE CONFIRMATION LETTER SHALL BE PROVIDED TO WATER RESOURCES IN ACCORDANCE WITH RULE 62-621.300(4)(a)PART III.D.1., F.A.C.
   D. THE SWPPP SHALL BE CERTIFIED IN ACCORDANCE WITH RULE 62-621.300(4)(a)PART V.D.6, F.A.C.
   E. A COPY OF THE SWPPP, AND COPIES OF THE INSPECTION AND MAINTENANCE RECORDS SHALL BE MAINTAINED AT THE PROJECT SITE, AND SHALL BE READILY AVAILABLE TO COUNTY OR STATE INSPECTORS.

8. THE DISCHARGE OF GROUNDWATER PRODUCED THROUGH DEWATERING, TO SURFACE WATERS, OR ANY PORTION OF THE MS4 WILL REQUIRE SEPARATE PERMITTING FROM THE FLORIDA DEPARTMENT OF ENVIRONMENTAL PROTECTION (DEP). PERMIT(S) SHALL BE OBTAINED PRIOR TO THE COMMENCEMENT OF DEWATERING.

MAINTENANCE NOTES:

N.P.D.E.S. PERMIT COMPLIANCE REQUIRES INSPECTIONS EVERY 7 CALENDAR DAYS BY A NPDES QUALIFIED INSPECTOR AND PERIODIC INSPECTIONS WITHIN 24 HOURS OF ANY RAINFALL EVENT OF 0.5 INCHES OR GREATER. THESE INSPECTIONS MAY RESULT IN RECOMMENDATIONS FOR ROUTINE MAINTENANCE OF THE SOIL EROSION CONTROL DEVICES, AS WELL AS FURTHER MAINTENANCE AS OUTLINED BELOW.

1. THROUGHOUT THE CONSTRUCTION PERIOD, ALL MUD/SILT TRACKED ONTO EXISTING FDOT ROADS FROM THE SITE DUE TO CONSTRUCTION SHALL BE IMMEDIATELY REMOVED BY THE CONTRACTOR.

2. CATCH BASIN INLET AND CONCRETE FLUME FILTERS SHALL BE MAINTAINED CLEAN AT ALL TIMES THROUGHOUT THE CONSTRUCTION PERIOD. WEEKLY INSPECTIONS WILL BE PERFORMED EVERY 7 CALENDAR DAYS. IF A FILTER HAS HOLES OR IS INUNDATED WITH SEDIMENT, THE FILTER WILL REQUIRE REPLACEMENT.

3. CONSTRUCTION ACCESS AND TRACKING MAT MUST BE MAINTAINED AS NECESSARY. REPLENISH CRUSHED AGGREGATE IF PRESENT LAYER IS FILLED WITH SEDIMENT, POOLING WATER OR HAS RUTS. A NEW LAYER MAY BE ADDED IF OLD LAYERS BECOME COMPACTED.

4. SILT FENCE IS TO BE INSPECTED DAILY BY CONTRACTOR AND EVERY 7 CALENDAR DAYS BY NPDES QUALIFIED INSPECTOR. IF REPAIRS OR REPLACEMENT IS NECESSARY, IT SHALL BE PERFORMED IMMEDIATELY. THE SILT FENCE SHOULD BE TRENCHED IN, BACK-FILLED, AND STAPLED OR STAKED ACCORDING TO THE MANUFACTURER'S SPECIFICATIONS. MAINTENANCE INCLUDES THE REMOVING OF BUILT-UP SEDIMENT. WHEN THE SEDIMENT ACCUMULATES TO 1/3 OF THE HEIGHT OF THE FENCE, CONTRACTOR MAY HAVE TO REMOVE, REPLACE, RETRENCH, OR RE-BACKFILL THE FENCE IF IT FAILS. IT WOULD ALSO BE NECESSARY TO REINSTALL IF ANY PORTION OF THE FENCING WAS DAMAGED BY CONSTRUCTION MACHINERY.

5. SEEDING OR RESEEDING MAY BE REQUIRED IMMEDIATELY TO AREAS WHICH HAVE BEEN DAMAGED BY RUNOFF.

6. REMOVE ANY VISIBLE SEDIMENT FROM THE POND BOTTOM TO KEEP THE BASIN DESIGNED INFILTRATION PERFORMANCE

7. THE CONTRACTOR SHALL CONTINUOUSLY ENSURE THAT THE PERIMETER OF THE SITE, INCLUDING CONSTRUCTION ENTRANCES, IS SECURED FROM ALLOWING DEBRIS TO LEAVE THE SITE DUE TO CONSTRUCTION ACTIVITY OR RAINFALL EVENTS. A WEEKLY LOG SHALL BE UPDATED AND KEPT ON-SITE IN ACCORDANCE WITH THE NPDES PERMIT. BY BIDDING DOCUMENTS CONTRACTOR ACKNOWLEDGES HE/SHE IS AWARE OF NPDES GUIDELINES AND POLICIES AS WELL AS BEST MANAGEMENT PRACTICES AND ASSUMES SOLE RESPONSIBILITY FOR FINES IMPOSED BY GOVERNMENTAL AGENCIES DUE TO VIOLATIONS.

10 5 2.5 0 10
1"= 10'

BOHLER™ ENGINEERING
SITE CIVIL AND CONSULTING ENGINEERING
LAND SURVEYING
PROGRAM MANAGEMENT
LANDSCAPE ARCHITECTURE
SUSTAINABLE DESIGN
PERMITTING SERVICES
TRANSPORTATION SERVICES

"© COPYRIGHT, DESIGN AND CONTENT OF THIS PLAN IS THE PROPERTY OF BOHLER, LTD. NO USE OR REPRODUCTION OF THIS PLAN IS PERMITTED WITHOUT WRITTEN AUTHORIZATION FROM BOHLER ENGINEERING, LTD. ALL REPRODUCTIONS, COPIES OR USES OF THIS PLAN IN ANY FORM OR MEDIUM, WITHOUT PRIOR WRITTEN AUTHORIZATION OF BOHLER ENGINEERING, LTD. ARE PROHIBITED. THIS PLAN SHALL BE UTILIZED FOR CONSTRUCTION PURPOSES ONLY AFTER THE ISSUANCE OF A CERTIFICATE OF AUTHORIZATION."

REVISIONS

REV	DATE	COMMENT	DRAWN BY / CHECKED BY
1	2019-08-23	CITY OF DELRAY BEACH COMMENTS	LJL / AS
2	2019-09-10	SPRAB COMMENTS	LJL / AS

THIS DRAWING IS INTENDED FOR MUNICIPAL AND/OR AGENCY REVIEW AND APPROVAL. IT IS NOT INTENDED AS A CONSTRUCTION DOCUMENT UNLESS INDICATED OTHERWISE

811 Know what's below. Call before you dig.

ALWAYS CALL 811

It's fast. It's free. It's the law.

ISSUED FOR MUNICIPAL & AGENCY REVIEW & APPROVAL

PROJECT No.:	FLB180120
DRAWN BY:	LJL
CHECKED BY:	AS
DATE:	2019-10-25
CAD I.D.:	FLB180120-OAP-1

PROJECT:

PIERRE DELRAY PHASE I - SPRAB SITE PLAN PACKAGE (AKA SUNTRUST BUILDING)

FOR

CLIENT

ZYSCOVICH ARCHITECTS

PROPOSED DEVELOPMENT

302 E ATLANTIC AVE
PALM BEACH COUNTY
DELRAY BEACH, FL

BOHLER ENGINEERING
2255 GLADES ROAD, SUITE 305E
BOCA RATON, FLORIDA 33431
Phone: (561) 571-0280
Fax: (561) 571-0281
FLORIDA BUSINESS CERT. OF AUTH. No. 30780
LANDSCAPE ARCHITECT BUSINESS LIC. No LC26000551

SHEET TITLE:

EROSION AND SEDIMENTATION CONTROL PLAN PHASE I

SHEET NUMBER:

C-602

REVISION 2 - 2019-09-10

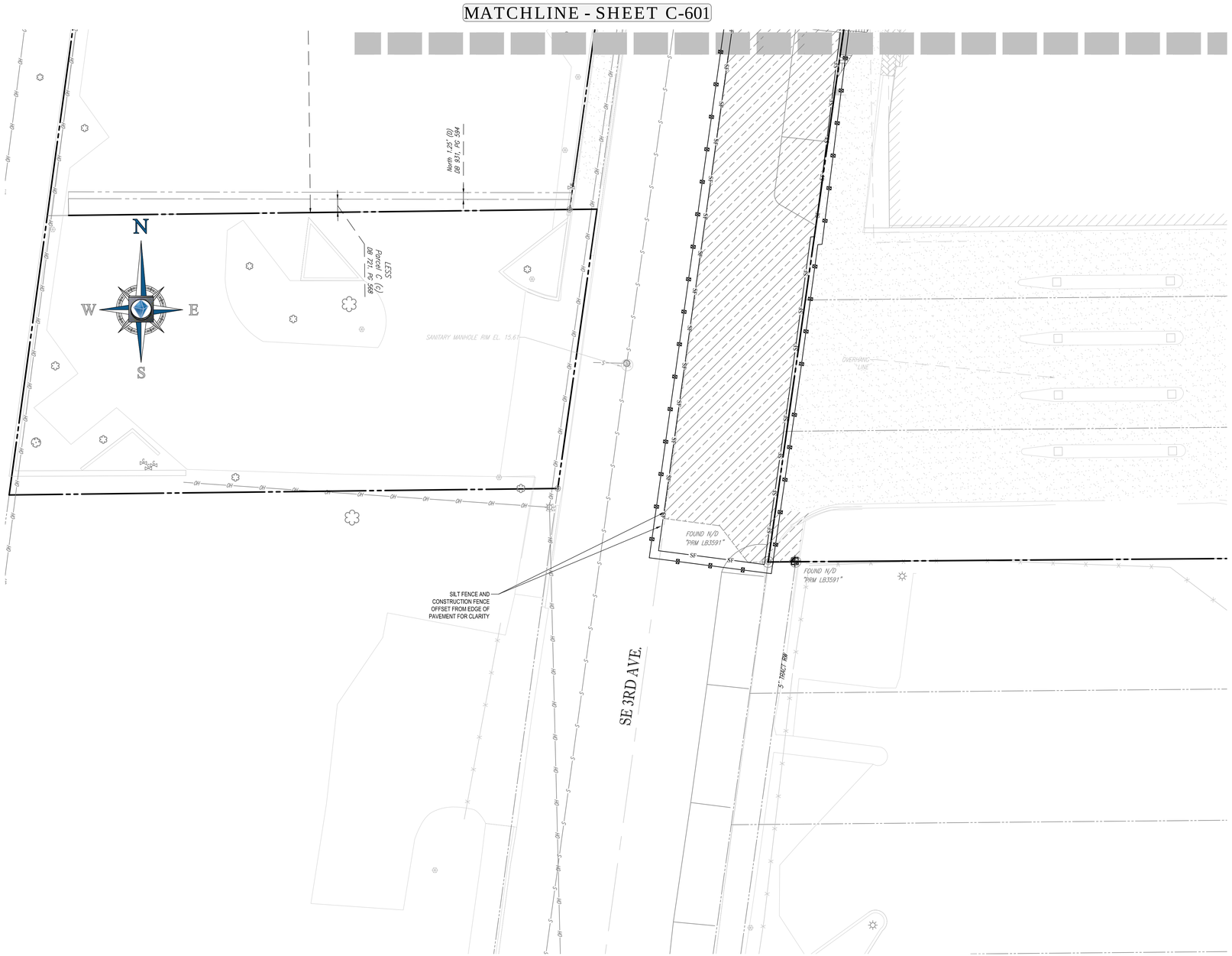

LEGEND:

- PROPERTY LINE
- EXIST. DRAINAGE STRUCTURES
- EXIST. STORM SEWER
- PROP SILT FENCE
- PROP CONSTRUCTION FENCE
- PROP SOIL TRACKING PREVENTION MAT
- PROP INLET PROTECTION

POLLUTION PREVENTION NOTES:

1. EROSION AND SEDIMENT CONTROL BMP'S IN ADDITION TO THOSE PRESENTED ON THESE PLANS SHALL BE IMPLEMENTED AS NECESSARY TO PREVENT TURBID DISCHARGES FROM FLOWING ONTO ADJACENT PROPERTIES OR ROADWAYS, OFF SITE STORMWATER CONVEYANCES OR RECEIVING WATERS, OR ON SITE WETLANDS AND SURFACE WATERS. BMP'S SHALL BE DESIGNED, INSTALLED, AND MAINTAINED BY THE SITE OPERATOR TO ENSURE THAT OFF SITE SURFACE WATER QUALITY REMAINS CONSISTENT WITH STATE AND LOCAL REGULATIONS. [THE OPERATOR IS THE ENTITY THAT OWNS OR OPERATES THE CONSTRUCTION ACTIVITY AND HAS AUTHORITY TO CONTROL THOSE ACTIVITIES AT THE PROJECT NECESSARY TO ENSURE COMPLIANCE.]

2. OFF SITE SURFACE WATER DISCHARGES, OR DISCHARGES TO ONSITE WETLANDS OR SURFACE WATERS WITH TURBIDITY IN EXCESS OF 29 NEPHELOMETRIC TURBIDITY UNITS (NTU'S) ABOVE BACKGROUND LEVEL SHALL BE IMMEDIATELY CORRECTED. SUCH INCIDENTS SHALL BE REPORTED TO WATER RESOURCES WITHIN 24 HOURS OF THE OCCURRENCE. THE REPORT SHALL INCLUDE THE CAUSE OF THE DISCHARGE AND CORRECTIVE ACTIONS TAKEN.

3. THE OPERATOR SHALL ENSURE THAT ADJACENT PROPERTIES ARE NOT IMPACTED BY WIND EROSION, OR EMISSIONS OF UNCONFINED PARTICULATE MATTER IN ACCORDANCE WITH RULE 62-296.320(4)(C)1, F.A.C., BY TAKING APPROPRIATE MEASURES TO STABILIZE AFFECTED AREAS.

4. FUEL AND OTHER PETROLEUM PRODUCT SPILLS THAT ENTER STORMWATER DRAINS OR WATERBODIES, OR FUEL AND OTHER PETROLEUM PRODUCT SPILLS THAT ARE IN EXCESS OF 25 GALLONS SHALL BE CONTAINED, CLEANED UP, AND IMMEDIATELY REPORTED TO WATER RESOURCES. SMALLER GROUND SURFACE SPILLS SHALL BE CLEANED UP AS SOON AS PRACTICAL.

5. IF CONTAMINATED SOIL AND/OR GROUNDWATER IS DISCOVERED DURING DEVELOPMENT OF THE SITE, ALL ACTIVITY IN THE VICINITY OF THE CONTAMINATION SHALL IMMEDIATELY CEASE, AND WATER RESOURCES SHALL BE CONTACTED.

6. PRIOR TO DEMOLITION OF EXISTING ON SITE STRUCTURES AN ASBESTOS SURVEY AND/OR ASBESTOS NOTIFICATION MAY BE REQUIRED.

7. NATIONAL POLLUTANT DISCHARGE ELIMINATION SYSTEM:
   - A. NPDES CONSTRUCTION GENERIC PERMIT COVERAGE SHALL BE OBTAINED AT LEAST 48 HOURS IN ADVANCE OF CONSTRUCTION COMMENCEMENT IN ACCORDANCE WITH RULE 62-621.300(4)(a), F.A.C.
   - B. A COPY OF THE CERTIFIED NPDES NOI, OR A COPY OF THE FDEP COVERAGE CONFIRMATION LETTER SHALL BE POSTED AT THE SITE IN ACCORDANCE WITH RULE 62-621.300(4)(A) PART III.C.2, F.A.C.
   - C. A COPY OF THE CERTIFIED NPDES NOI, OR A COPY OF THE FDEP COVERAGE CONFIRMATION LETTER SHALL BE PROVIDED TO WATER RESOURCES IN ACCORDANCE WITH RULE 62-621.300(4)(a)PART III.D.1, F.A.C.
   - D. THE SWPPP SHALL BE CERTIFIED IN ACCORDANCE WITH RULE 62-621.300(4)(a)PART V.D.6, F.A.C.
   - E. A COPY OF THE SWPPP, AND COPIES OF THE INSPECTION AND MAINTENANCE RECORDS SHALL BE MAINTAINED AT THE PROJECT SITE, AND SHALL BE READILY AVAILABLE TO COUNTY OR STATE INSPECTORS.

8. THE DISCHARGE OF GROUNDWATER PRODUCED THROUGH DEWATERING, TO SURFACE WATERS, OR ANY PORTION OF THE MS4 WILL REQUIRE SEPARATE PERMITTING FROM THE FLORIDA DEPARTMENT OF ENVIRONMENTAL PROTECTION (DEP). PERMIT(S) SHALL BE OBTAINED PRIOR TO THE COMMENCEMENT OF DEWATERING.

MAINTENANCE NOTES:

N.P.D.E.S. PERMIT COMPLIANCE REQUIRES INSPECTIONS EVERY 7 CALENDAR DAYS BY A NPDES QUALIFIED INSPECTOR AND PERIODIC INSPECTIONS WITHIN 24 HOURS OF ANY RAINFALL EVENT OF 0.5 INCHES OR GREATER. THESE INSPECTIONS MAY RESULT IN RECOMMENDATIONS FOR ROUTINE MAINTENANCE OF THE SOIL EROSION CONTROL DEVICES, AS WELL AS FURTHER MAINTENANCE AS OUTLINED BELOW.

1. THROUGHOUT THE CONSTRUCTION PERIOD, ALL MUD/SILT TRACKED ONTO EXISTING FDOT ROADS FROM THE SITE DUE TO CONSTRUCTION SHALL BE IMMEDIATELY REMOVED BY THE CONTRACTOR.

2. CATCH BASIN INLET AND CONCRETE FLUME FILTERS SHALL BE MAINTAINED CLEAN AT ALL TIMES THROUGHOUT THE CONSTRUCTION PERIOD. WEEKLY INSPECTIONS WILL BE PERFORMED EVERY 7 CALENDAR DAYS. IF A FILTER HAS HOLES OR IS INUNDATED WITH SEDIMENT, THE FILTER WILL REQUIRE REPLACEMENT.

3. CONSTRUCTION ACCESS AND TRACKING MAT MUST BE MAINTAINED AS NECESSARY. REPLENISH CRUSHED AGGREGATE IF PRESENT LAYER IS FILLED WITH SEDIMENT, POOLING WATER OR HAS RUTS. A NEW LAYER MAY BE ADDED IF OLD LAYERS BECOME COMPACTED.

4. SILT FENCE IS TO BE INSPECTED DAILY BY CONTRACTOR AND EVERY 7 CALENDAR DAYS BY NPDES QUALIFIED INSPECTOR. IF REPAIRS OR REPLACEMENT IS NECESSARY, IT SHALL BE PERFORMED IMMEDIATELY. THE SILT FENCE SHOULD BE TRENCHED IN, BACK-FILLED, AND STAPLED OR STAKED ACCORDING TO THE MANUFACTURER'S SPECIFICATIONS. MAINTENANCE INCLUDES THE REMOVING OF BUILT-UP SEDIMENT. WHEN THE SEDIMENT ACCUMULATES TO 1/3 OF THE HEIGHT OF THE FENCE. CONTRACTOR MAY HAVE TO REMOVE, REPLACE, RETRENCH, OR RE-BACKFILL THE FENCE IF IT FAILS. IT WOULD ALSO BE NECESSARY TO REINSTALL IF ANY PORTION OF THE FENCING WAS DAMAGED BY CONSTRUCTION MACHINERY.

5. SEEDING OR RESEEDING MAY BE REQUIRED IMMEDIATELY TO AREAS WHICH HAVE BEEN DAMAGED BY RUNOFF.

6. REMOVE ANY VISIBLE SEDIMENT FROM THE POND BOTTOM TO KEEP THE BASIN DESIGNED INFILTRATION PERFORMANCE

7. THE CONTRACTOR SHALL CONTINUOUSLY ENSURE THAT THE PERIMETER OF THE SITE, INCLUDING CONSTRUCTION ENTRANCES, IS SECURED FROM ALLOWING DEBRIS TO LEAVE THE SITE DUE TO CONSTRUCTION ACTIVITY OR RAINFALL EVENTS. A WEEKLY LOG SHALL BE UPDATED AND KEPT ON-SITE IN ACCORDANCE WITH THE NPDES PERMIT. BY BIDDING DOCUMENTS CONTRACTOR ACKNOWLEDGES HE/SHE IS AWARE OF NPDES GUIDELINES AND POLICIES AS WELL AS BEST MANAGEMENT PRACTICES AND ASSUMES SOLE RESPONSIBILITY FOR FINES IMPOSED BY GOVERNMENTAL AGENCIES DUE TO VIOLATIONS.

10 5 2.5 0 10
1"= 10'

BOHLER ENGINEERING
SITE CIVIL AND CONSULTING ENGINEERING
LAND SURVEYING
PROGRAM MANAGEMENT
LANDSCAPE ARCHITECTURE
SUSTAINABLE DESIGN
PERMITTING SERVICES
TRANSPORTATION SERVICES

THE INFORMATION, DESIGN AND CONTENT OF THIS PLAN ARE PROPRIETARY AND SHALL NOT BE COPIED OR USED FOR ANY PURPOSE WITHOUT PRIOR WRITTEN AUTHORIZATION FROM BOHLER ENGINEERING. ONLY THOSE PLANS OFFICially ISSUED FOR CONSTRUCTION SHALL BE UTILIZED FOR CONSTRUCTION PURPOSES.

REVISIONS

REV	DATE	COMMENT	DRAWN BY / CHECKED BY
1	2019-08-23	CITY OF DELRAY BEACH COMMENTS	LJL / AS
2	2019-09-10	SPRAB COMMENTS	LJL / AS

THIS DRAWING IS INTENDED FOR MUNICIPAL AND/OR AGENCY REVIEW AND APPROVAL. IT IS NOT INTENDED AS A CONSTRUCTION DOCUMENT UNLESS INDICATED OTHERWISE.

811 Know what's below. Call before you dig.
ALWAYS CALL 811
It's fast. It's free. It's the law.

ISSUED FOR MUNICIPAL & AGENCY REVIEW & APPROVAL

PROJECT No.:	FLB180120
DRAWN BY:	LJL
CHECKED BY:	AS
DATE:	2019-10-25
CAD I.D.:	FLB180120-OAP-1

PROJECT:
PIERRE DELRAY PHASE I - SPRAB SITE PLAN PACKAGE (AKA SUNTRUST BUILDING)

FOR

CLIENT
ZYSCOVICH ARCHITECTS

PROPOSED DEVELOPMENT
302 E ATLANTIC AVE
PALM BEACH COUNTY
DELRAY BEACH, FL

BOHLER ENGINEERING
2255 GLADES ROAD, SUITE 305E
BOCA RATON, FLORIDA 33431
Phone: (561) 571-0280
Fax: (561) 571-0281
FLORIDA BUSINESS CERT. OF AUTH. No. 30780
LANDSCAPE ARCHITECT BUSINESS LIC. No. LC26000551

SHEET TITLE:
EROSION AND SEDIMENTATION CONTROL PLAN PHASE I

SHEET NUMBER:
C-603

REVISION 2 - 2019-09-10

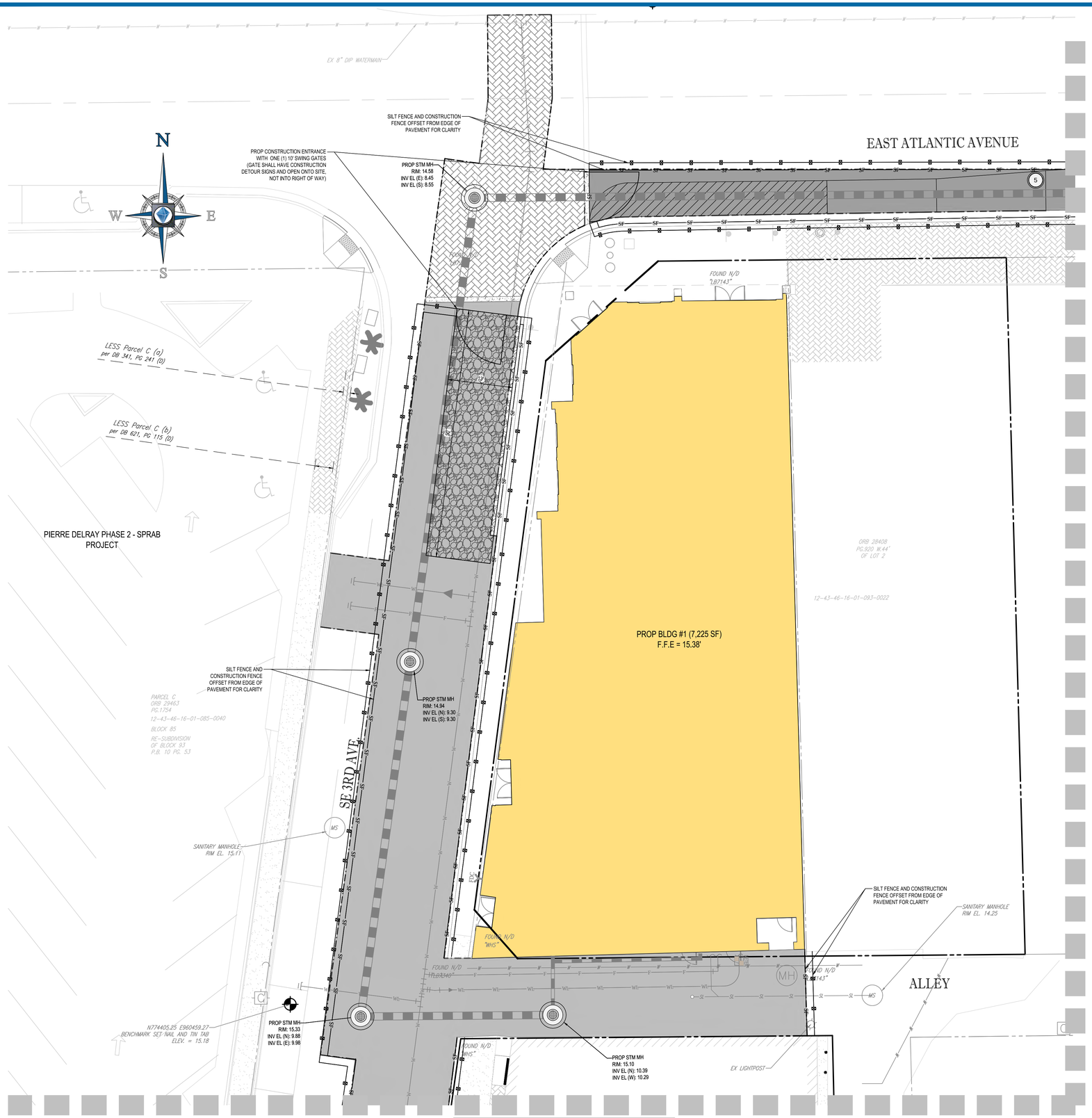

LEGEND:

- PROPERTY LINE
- EXIST. DRAINAGE STRUCTURES
- EXIST. STORM SEWER
- PROP SILT FENCE
- PROP CONSTRUCTION FENCE
- PROP SOIL TRACKING PREVENTION MAT
- PROP INLET PROTECTION

POLLUTION PREVENTION NOTES:

1. EROSION AND SEDIMENT CONTROL BMP'S IN ADDITION TO THOSE PRESENTED ON THESE PLANS SHALL BE IMPLEMENTED AS NECESSARY TO PREVENT TURBID DISCHARGES FROM FLOWING ONTO ADJACENT PROPERTIES OR ROADWAYS, OFF SITE STORMWATER CONVEYANCES OR RECEIVING WATERS, OR ON SITE WETLANDS AND SURFACE WATERS. BMP'S SHALL BE DESIGNED, INSTALLED, AND MAINTAINED BY THE SITE OPERATOR TO ENSURE THAT OFF SITE SURFACE WATER QUALITY REMAINS CONSISTENT WITH STATE AND LOCAL REGULATIONS. [THE OPERATOR IS THE ENTITY THAT OWNS OR OPERATES THE CONSTRUCTION ACTIVITY AND HAS AUTHORITY TO CONTROL THOSE ACTIVITIES AT THE PROJECT NECESSARY TO ENSURE COMPLIANCE.]
2. OFF SITE SURFACE WATER DISCHARGES, OR DISCHARGES TO ONSITE WETLANDS OR SURFACE WATERS WITH TURBIDITY IN EXCESS OF 29 NEPHELOMETRIC TURBIDITY UNITS (NTUS) ABOVE BACKGROUND LEVEL SHALL BE IMMEDIATELY CORRECTED. SUCH INCIDENTS SHALL BE REPORTED TO WATER RESOURCES WITHIN 24 HOURS OF THE OCCURRENCE. THE REPORT SHALL INCLUDE THE CAUSE OF THE DISCHARGE AND CORRECTIVE ACTIONS TAKEN.
3. THE OPERATOR SHALL ENSURE THAT ADJACENT PROPERTIES ARE NOT IMPACTED BY WIND EROSION, OR EMISSIONS OF UNCONFINED PARTICULATE MATTER IN ACCORDANCE WITH RULE 62-296.320(4)(C)1, F.A.C., BY TAKING APPROPRIATE MEASURES TO STABILIZE AFFECTED AREAS.
4. FUEL AND OTHER PETROLEUM PRODUCT SPILLS THAT ENTER STORMWATER DRAINS OR WATERBODIES, OR FUEL AND OTHER PETROLEUM PRODUCT SPILLS THAT ARE IN EXCESS OF 25 GALLONS SHALL BE CONTAINED, CLEANED UP, AND IMMEDIATELY REPORTED TO WATER RESOURCES. SMALLER GROUND SURFACE SPILLS SHALL BE CLEANED UP AS SOON AS PRACTICAL.
5. IF CONTAMINATED SOIL AND/OR GROUNDWATER IS DISCOVERED DURING DEVELOPMENT OF THE SITE, ALL ACTIVITY IN THE VICINITY OF THE CONTAMINATION SHALL IMMEDIATELY CEASE, AND WATER RESOURCES SHALL BE CONTACTED.
6. PRIOR TO DEMOLITION OF EXISTING ON SITE STRUCTURES AN ASBESTOS SURVEY AND/OR ASBESTOS NOTIFICATION MAY BE REQUIRED.
7. NATIONAL POLLUTANT DISCHARGE ELIMINATION SYSTEM:
   - A. NPDES CONSTRUCTION GENERIC PERMIT COVERAGE SHALL BE OBTAINED AT LEAST 48 HOURS IN ADVANCE OF CONSTRUCTION COMMENCEMENT IN ACCORDANCE WITH RULE 62-621.300(4)(a), F.A.C.
   - B. A COPY OF THE CERTIFIED NPDES NOI, OR A COPY OF THE FDEP COVERAGE CONFIRMATION LETTER SHALL BE POSTED AT THE SITE IN ACCORDANCE WITH RULE 62-621.300(4)(A) PART III.C.2, F.A.C.
   - C. A COPY OF THE CERTIFIED NPDES NOI, OR A COPY OF THE FDEP COVERAGE CONFIRMATION LETTER SHALL BE PROVIDED TO WATER RESOURCES IN ACCORDANCE WITH RULE 62-621.300(4)(a)PART III.D.1, F.A.C.
   - D. THE SWPPP SHALL BE CERTIFIED IN ACCORDANCE WITH RULE 62-621.300(4)(a)PART V.D.6, F.A.C.
   - E. A COPY OF THE SWPPP, AND COPIES OF THE INSPECTION AND MAINTENANCE RECORDS SHALL BE MAINTAINED AT THE PROJECT SITE, AND SHALL BE READILY AVAILABLE TO COUNTY OR STATE INSPECTORS.
8. THE DISCHARGE OF GROUNDWATER PRODUCED THROUGH DEWATERING, TO SURFACE WATERS, OR ANY PORTION OF THE MS4 WILL REQUIRE SEPARATE PERMITTING FROM THE FLORIDA DEPARTMENT OF ENVIRONMENTAL PROTECTION (DEP). PERMIT(S) SHALL BE OBTAINED PRIOR TO THE COMMENCEMENT OF DEWATERING.

MAINTENANCE NOTES:

N.P.D.E.S. PERMIT COMPLIANCE REQUIRES INSPECTIONS EVERY 7 CALENDAR DAYS BY A NPDES QUALIFIED INSPECTOR AND PERIODIC INSPECTIONS WITHIN 24 HOURS OF ANY RAINFALL EVENT OF 0.5 INCHES OR GREATER. THESE INSPECTIONS MAY RESULT IN RECOMMENDATIONS FOR ROUTINE MAINTENANCE OF THE SOIL EROSION CONTROL DEVICES, AS WELL AS FURTHER MAINTENANCE AS OUTLINED BELOW.

1. THROUGHOUT THE CONSTRUCTION PERIOD, ALL MUD/SILT TRACKED ONTO EXISTING FDOT ROADS FROM THE SITE DUE TO CONSTRUCTION SHALL BE IMMEDIATELY REMOVED BY THE CONTRACTOR.
2. CATCH BASIN INLET AND CONCRETE FLUME FILTERS SHALL BE MAINTAINED CLEAN AT ALL TIMES THROUGHOUT THE CONSTRUCTION PERIOD. WEEKLY INSPECTIONS WILL BE PERFORMED EVERY 7 CALENDAR DAYS. IF A FILTER HAS HOLES OR IS INUNDATED WITH SEDIMENT, THE FILTER WILL REQUIRE REPLACEMENT.
3. CONSTRUCTION ACCESS AND TRACKING MAT MUST BE MAINTAINED AS NECESSARY. REPLENISH CRUSHED AGGREGATE IF PRESENT LAYER IS FILLED WITH SEDIMENT, POOLING WATER OR HAS RUTS. A NEW LAYER MAY BE ADDED IF OLD LAYERS BECOME COMPACTED.
4. SILT FENCE IS TO BE INSPECTED DAILY BY CONTRACTOR AND EVERY 7 CALENDAR DAYS BY NPDES QUALIFIED INSPECTOR. IF REPAIRS OR REPLACEMENT IS NECESSARY, IT SHALL BE PERFORMED IMMEDIATELY. THE SILT FENCE SHOULD BE TRENCHED IN, BACK-FILLED, AND STAPLED OR STAKED ACCORDING TO THE MANUFACTURER'S SPECIFICATIONS. MAINTENANCE INCLUDES THE REMOVING OF BUILT-UP SEDIMENT. WHEN THE SEDIMENT ACCUMULATES TO 1/3 OF THE HEIGHT OF THE FENCE, CONTRACTOR MAY HAVE TO REMOVE, REPLACE, RETRENCH, OR RE-BACKFILL THE FENCE IF IT FAILS. IT WOULD ALSO BE NECESSARY TO REINSTALL IF ANY PORTION OF THE FENCING WAS DAMAGED BY CONSTRUCTION MACHINERY.
5. SEEDING OR RESEEDING MAY BE REQUIRED IMMEDIATELY TO AREAS WHICH HAVE BEEN DAMAGED BY RUNOFF.
6. REMOVE ANY VISIBLE SEDIMENT FROM THE POND BOTTOM TO KEEP THE BASIN DESIGNED INFILTRATION PERFORMANCE
7. THE CONTRACTOR SHALL CONTINUOUSLY ENSURE THAT THE PERIMETER OF THE SITE, INCLUDING CONSTRUCTION ENTRANCES, IS SECURED FROM ALLOWING DEBRIS TO LEAVE THE SITE DUE TO CONSTRUCTION ACTIVITY OR RAINFALL EVENTS. A WEEKLY LOG SHALL BE UPDATED AND KEPT ON-SITE IN ACCORDANCE WITH THE NPDES PERMIT. BY BIDDING DOCUMENTS CONTRACTOR ACKNOWLEDGES HE/SHE IS AWARE OF NPDES GUIDELINES AND POLICIES AS WELL AS BEST MANAGEMENT PRACTICES AND ASSUMES SOLE RESPONSIBILITY FOR FINES IMPOSED BY GOVERNMENTAL AGENCIES DUE TO VIOLATIONS.

10 5 2.5 0 10
1"=10'

BOHLER ENGINEERING
SITE CIVIL AND CONSULTING ENGINEERING
LAND SURVEYING
PROGRAM MANAGEMENT
LANDSCAPE ARCHITECTURE
SUSTAINABLE DESIGN
PERMITTING SERVICES
TRANSPORTATION SERVICES

THE INFORMATION, DESIGN AND CONTENT OF THIS PLAN ARE PROPRIETARY AND SHALL NOT BE COPIED OR USED FOR ANY PURPOSE WITHOUT PRIOR WRITTEN AUTHORIZATION FROM BOHLER ENGINEERING. ONLY THE PLANS AND SPECIFICATIONS SIGNED AND SEALED BY A LICENSED PROFESSIONAL ENGINEER SHALL BE UTILIZED FOR CONSTRUCTION PURPOSES.

REVISIONS

REV	DATE	COMMENT	DRAWN BY / CHECKED BY
1	2019-08-23	CITY OF DELRAY BEACH COMMENTS	LJL / AS
2	2019-09-10	SPRAB COMMENTS	LJL / AS

THIS DRAWING IS INTENDED FOR MUNICIPAL AND/OR AGENCY REVIEW AND APPROVAL. IT IS NOT INTENDED AS A CONSTRUCTION DOCUMENT UNLESS INDICATED OTHERWISE.

811 Know what's below. Call before you dig.
ALWAYS CALL 811
It's fast. It's free. It's the law.

ISSUED FOR MUNICIPAL & AGENCY REVIEW & APPROVAL

PROJECT No.:	FLB180120
DRAWN BY:	LJL
CHECKED BY:	AS
DATE:	2019-10-25
CAD I.D.:	FLB180120-OBP-1

PROJECT:
PIERRE DELRAY PHASE 1 - SPRAB SITE PLAN PACKAGE (AKA SUNTRUST BUILDING)
FOR
CLIENT
ZYSCOVICH ARCHITECTS
PROPOSED DEVELOPMENT
302 E ATLANTIC AVE
PALM BEACH COUNTY
DELRAY BEACH, FL

BOHLER ENGINEERING
2255 GLADES ROAD, SUITE 305E
BOCA RATON, FLORIDA 33431
Phone: (561) 571-0280
Fax: (561) 571-0281
FLORIDA BUSINESS CERT. OF AUTH. No. 30780
LANDSCAPE ARCHITECT BUSINESS LIC. No LC26000551

SHEET TITLE:
EROSION AND SEDIMENTATION CONTROL PLAN PHASE II

SHEET NUMBER:
C-604

REVISION 2 - 2019-09-10

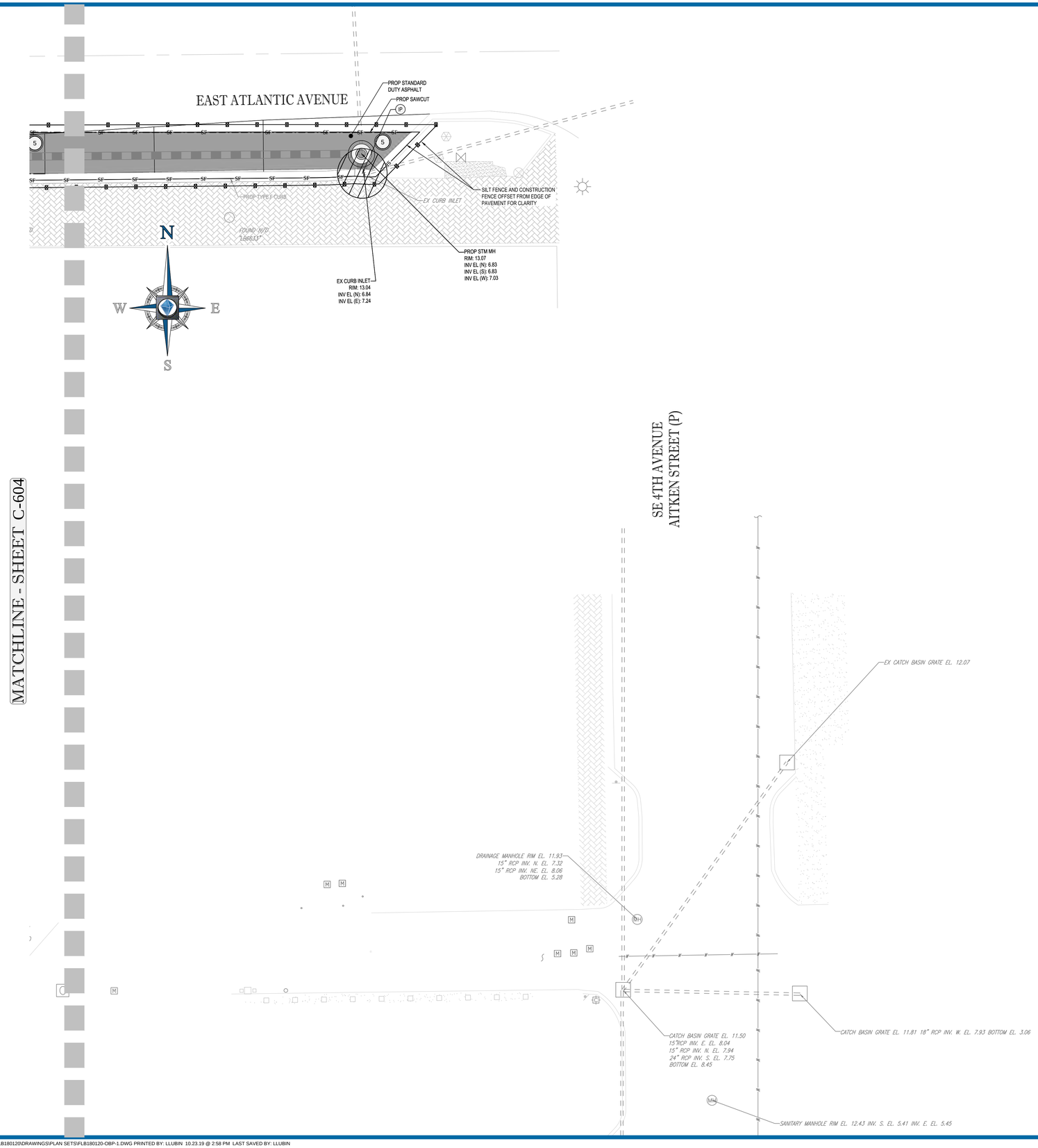

LEGEND:

- PROPERTY LINE
- EXIST. DRAINAGE STRUCTURES
- EXIST. STORM SEWER
- PROP SILT FENCE
- PROP CONSTRUCTION FENCE
- PROP SOIL TRACKING PREVENTION MAT
- PROP INLET PROTECTION

POLLUTION PREVENTION NOTES:

1. EROSION AND SEDIMENT CONTROL BMP'S IN ADDITION TO THOSE PRESENTED ON THESE PLANS SHALL BE IMPLEMENTED AS NECESSARY TO PREVENT TURBID DISCHARGES FROM FLOWING ONTO ADJACENT PROPERTIES OR ROADWAYS, OFF SITE STORMWATER CONVEYANCES OR RECEIVING WATERS, OR ON SITE WETLANDS AND SURFACE WATERS. BMP'S SHALL BE DESIGNED, INSTALLED, AND MAINTAINED BY THE SITE OPERATOR TO ENSURE THAT OFF SITE SURFACE WATER QUALITY REMAINS CONSISTENT WITH STATE AND LOCAL REGULATIONS. [THE OPERATOR IS THE ENTITY THAT OWNS OR OPERATES THE CONSTRUCTION ACTIVITY AND HAS AUTHORITY TO CONTROL THOSE ACTIVITIES AT THE PROJECT NECESSARY TO ENSURE COMPLIANCE.]
2. OFF SITE SURFACE WATER DISCHARGES, OR DISCHARGES TO ONSITE WETLANDS OR SURFACE WATERS WITH TURBIDITY IN EXCESS OF 29 NEPHELOMETRIC TURBIDITY UNITS (NTU'S) ABOVE BACKGROUND LEVEL SHALL BE IMMEDIATELY CORRECTED. SUCH INCIDENTS SHALL BE REPORTED TO WATER RESOURCES WITHIN 24 HOURS OF THE OCCURRENCE. THE REPORT SHALL INCLUDE THE CAUSE OF THE DISCHARGE AND CORRECTIVE ACTIONS TAKEN.
3. THE OPERATOR SHALL ENSURE THAT ADJACENT PROPERTIES ARE NOT IMPACTED BY WIND EROSION, OR EMISSIONS OF UNCONFINED PARTICULATE MATTER IN ACCORDANCE WITH RULE 62-296.320(4)(C)1, F.A.C., BY TAKING APPROPRIATE MEASURES TO STABILIZE AFFECTED AREAS.
4. FUEL AND OTHER PETROLEUM PRODUCT SPILLS THAT ENTER STORMWATER DRAINS OR WATERBODIES, OR FUEL AND OTHER PETROLEUM PRODUCT SPILLS THAT ARE IN EXCESS OF 25 GALLONS SHALL BE CONTAINED, CLEANED UP, AND IMMEDIATELY REPORTED TO WATER RESOURCES. SMALLER GROUND SURFACE SPILLS SHALL BE CLEANED UP AS SOON AS PRACTICAL.
5. IF CONTAMINATED SOIL AND/OR GROUNDWATER IS DISCOVERED DURING DEVELOPMENT OF THE SITE, ALL ACTIVITY IN THE VICINITY OF THE CONTAMINATION SHALL IMMEDIATELY CEASE, AND WATER RESOURCES SHALL BE CONTACTED.
6. PRIOR TO DEMOLITION OF EXISTING ON SITE STRUCTURES AN ASBESTOS SURVEY AND/OR ASBESTOS NOTIFICATION MAY BE REQUIRED.
7. NATIONAL POLLUTANT DISCHARGE ELIMINATION SYSTEM:
   - A. NPDES CONSTRUCTION GENERIC PERMIT COVERAGE SHALL BE OBTAINED AT LEAST 48 HOURS IN ADVANCE OF CONSTRUCTION COMMENCEMENT IN ACCORDANCE WITH RULE 62-621.300(4)(a), F.A.C.
   - B. A COPY OF THE CERTIFIED NPDES NOI, OR A COPY OF THE FDEP COVERAGE CONFIRMATION LETTER SHALL BE POSTED AT THE SITE IN ACCORDANCE WITH RULE 62-621.300(4)(A) PART III.C.2, F.A.C.
   - C. A COPY OF THE CERTIFIED NPDES NOI, OR A COPY OF THE FDEP COVERAGE CONFIRMATION LETTER SHALL BE PROVIDED TO WATER RESOURCES IN ACCORDANCE WITH RULE 62-621.300(4)(a)PART III.D.1, F.A.C.
   - D. THE SWPPP SHALL BE CERTIFIED IN ACCORDANCE WITH RULE 62-621.300(4)(a)PART V.D.6, F.A.C.
   - E. A COPY OF THE SWPPP, AND COPIES OF THE INSPECTION AND MAINTENANCE RECORDS SHALL BE MAINTAINED AT THE PROJECT SITE, AND SHALL BE READILY AVAILABLE TO COUNTY OR STATE INSPECTORS.
8. THE DISCHARGE OF GROUNDWATER PRODUCED THROUGH DEWATERING, TO SURFACE WATERS, OR ANY PORTION OF THE MS4 WILL REQUIRE SEPARATE PERMITTING FROM THE FLORIDA DEPARTMENT OF ENVIRONMENTAL PROTECTION (DEP). PERMIT(S) SHALL BE OBTAINED PRIOR TO THE COMMENCEMENT OF DEWATERING.

MAINTENANCE NOTES:

N.P.D.E.S. PERMIT COMPLIANCE REQUIRES INSPECTIONS EVERY 7 CALENDAR DAYS BY A NPDES QUALIFIED INSPECTOR AND PERIODIC INSPECTIONS WITHIN 24 HOURS OF ANY RAINFALL EVENT OF 0.5 INCHES OR GREATER. THESE INSPECTIONS MAY RESULT IN RECOMMENDATIONS FOR ROUTINE MAINTENANCE OF THE SOIL EROSION CONTROL DEVICES, AS WELL AS FURTHER MAINTENANCE AS OUTLINED BELOW.

1. THROUGHOUT THE CONSTRUCTION PERIOD, ALL MUD/SILT TRACKED ONTO EXISTING FOOT ROADS FROM THE SITE DUE TO CONSTRUCTION SHALL BE IMMEDIATELY REMOVED BY THE CONTRACTOR.
2. CATCH BASIN INLET AND CONCRETE FLUME FILTERS SHALL BE MAINTAINED CLEAN AT ALL TIMES THROUGHOUT THE CONSTRUCTION PERIOD. WEEKLY INSPECTIONS WILL BE PERFORMED EVERY 7 CALENDAR DAYS. IF A FILTER HAS HOLES OR IS INUNDATED WITH SEDIMENT, THE FILTER WILL REQUIRE REPLACEMENT.
3. CONSTRUCTION ACCESS AND TRACKING MAT MUST BE MAINTAINED AS NECESSARY. REPLENISH CRUSHED AGGREGATE IF PRESENT LAYER IS FILLED WITH SEDIMENT, POOLING WATER OR HAS RUTS. A NEW LAYER MAY BE ADDED IF OLD LAYERS BECOME COMPACTED.
4. SILT FENCE IS TO BE INSPECTED DAILY BY CONTRACTOR AND EVERY 7 CALENDAR DAYS BY NPDES QUALIFIED INSPECTOR. IF REPAIRS OR REPLACEMENT IS NECESSARY, IT SHALL BE PERFORMED IMMEDIATELY. THE SILT FENCE SHOULD BE TRENCHED IN, BACK-FILLED, AND STAPLED OR STAKED ACCORDING TO THE MANUFACTURER'S SPECIFICATIONS. MAINTENANCE INCLUDES THE REMOVING OF BUILT-UP SEDIMENT. WHEN THE SEDIMENT ACCUMULATES TO 1/3 OF THE HEIGHT OF THE FENCE, CONTRACTOR MAY HAVE TO REMOVE, REPLACE, RETRENCH, OR RE-BACKFILL THE FENCE IF IT FAILS. IT WOULD ALSO BE NECESSARY TO REINSTALL IF ANY PORTION OF THE FENCING WAS DAMAGED BY CONSTRUCTION MACHINERY.
5. SEEDING OR RESEEDING MAY BE REQUIRED IMMEDIATELY TO AREAS WHICH HAVE BEEN DAMAGED BY RUNOFF.
6. REMOVE ANY VISIBLE SEDIMENT FROM THE POND BOTTOM TO KEEP THE BASIN DESIGNED INFILTRATION PERFORMANCE
7. THE CONTRACTOR SHALL CONTINUOUSLY ENSURE THAT THE PERIMETER OF THE SITE, INCLUDING CONSTRUCTION ENTRANCES, IS SECURED FROM ALLOWING DEBRIS TO LEAVE THE SITE DUE TO CONSTRUCTION ACTIVITY OR RAINFALL EVENTS. A WEEKLY LOG SHALL BE UPDATED AND KEPT ON-SITE IN ACCORDANCE WITH THE NPDES PERMIT. BY BIDDING DOCUMENTS CONTRACTOR ACKNOWLEDGES HE/SHE IS AWARE OF NPDES GUIDELINES AND POLICIES AS WELL AS BEST MANAGEMENT PRACTICES AND ASSUMES SOLE RESPONSIBILITY FOR FINES IMPOSED BY GOVERNMENTAL AGENCIES DUE TO VIOLATIONS.

10 5 2.5 0 10

1"= 10'

BOHLER ENGINEERING
SITE CIVIL AND CONSULTING ENGINEERING
LAND SURVEYING
PROGRAM MANAGEMENT
LANDSCAPE ARCHITECTURE
SUSTAINABLE DESIGN
PERMITTING SERVICES
TRANSPORTATION SERVICES

THE INFORMATION, DESIGN AND CONTENT OF THIS PLAN ARE PROPRIETARY AND SHALL NOT BE COPIED OR USED FOR ANY PURPOSE WITHOUT PRIOR WRITTEN AUTHORIZATION FROM BOHLER ENGINEERING. ONLY THE PLANS AND SPECIFICATIONS BEARING THE ORIGINAL SIGNATURE AND SEAL OF A LICENSED PROFESSIONAL ENGINEER SHALL BE UTILIZED FOR CONSTRUCTION PURPOSES.

REVISIONS

REV	DATE	COMMENT	DRAWN BY / CHECKED BY
1	2019-08-23	CITY OF DELRAY BEACH COMMENTS	LJL / AS
2	2019-09-10	SPRAB COMMENTS	LJL / AS

THIS DRAWING IS INTENDED FOR MUNICIPAL AND/OR AGENCY REVIEW AND APPROVAL. IT IS NOT INTENDED AS A CONSTRUCTION DOCUMENT UNLESS INDICATED OTHERWISE.

811 Know what's below. Call before you dig.

ALWAYS CALL 811

It's fast. It's free. It's the law.

ISSUED FOR MUNICIPAL & AGENCY REVIEW & APPROVAL

PROJECT No.:	FLB180120
DRAWN BY:	LJL
CHECKED BY:	AS
DATE:	2019-10-25
CAD I.D.:	FLB180120-OBP-1

PROJECT:

PIERRE DELRAY PHASE 1 - SPRAB SITE PLAN PACKAGE (AKA SUNTRUST BUILDING)

FOR

CLIENT

ZYSCOVICH ARCHITECTS

PROPOSED DEVELOPMENT

302 E ATLANTIC AVE
PALM BEACH COUNTY
DELRAY BEACH, FL

BOHLER ENGINEERING
2255 GLADES ROAD, SUITE 305E
BOCA RATON, FLORIDA 33431
Phone: (561) 571-0280
Fax: (561) 571-0281
FLORIDA BUSINESS CERT. OF AUTH. No. 30780
LANDSCAPE ARCHITECT BUSINESS LIC. No LC26000551

SHEET TITLE:

EROSION AND SEDIMENTATION CONTROL PLAN PHASE II

SHEET NUMBER:

C-605

REVISION 2 - 2019-09-10

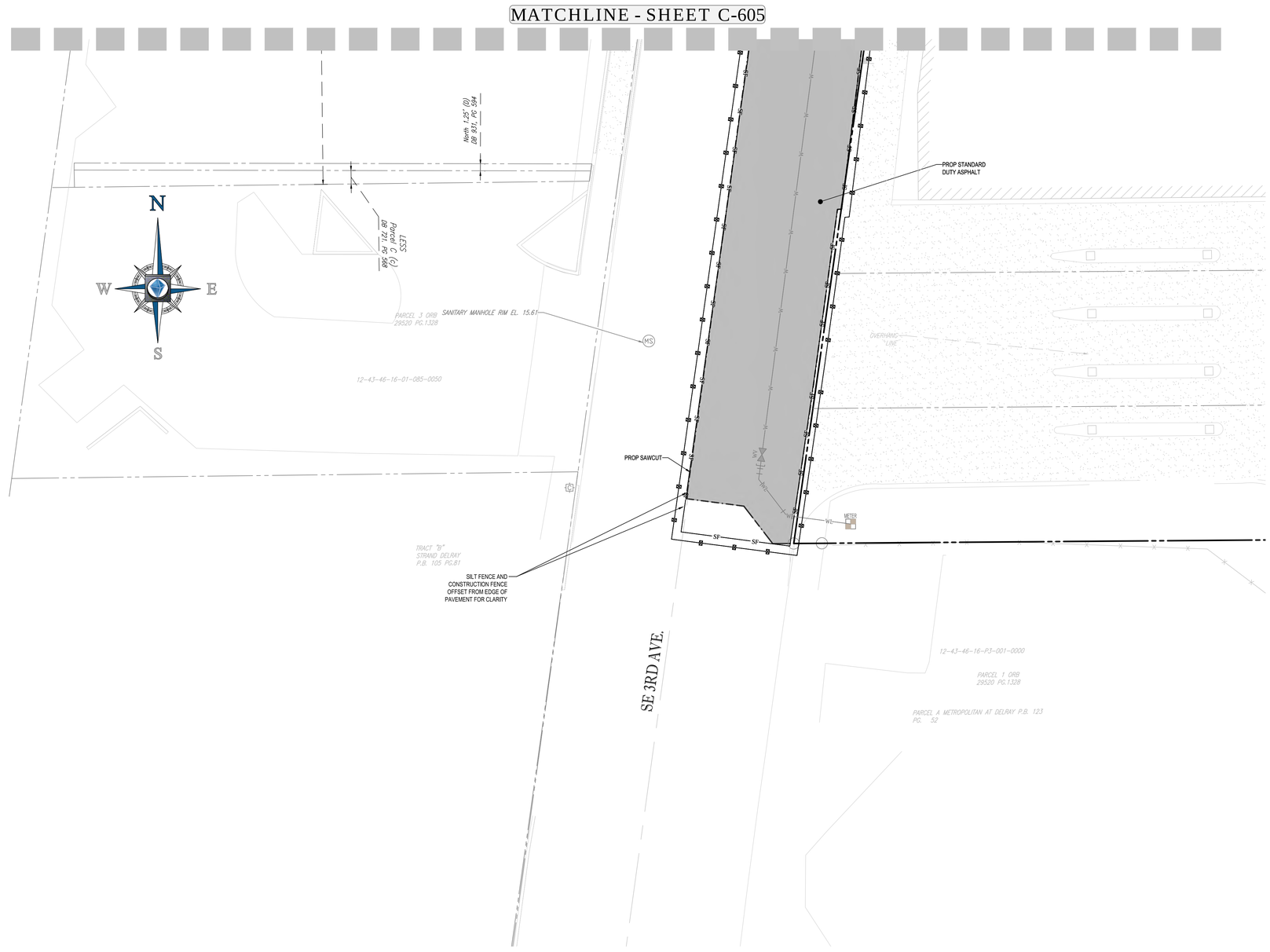

LEGEND:

- PROPERTY LINE
- EXIST. DRAINAGE STRUCTURES
- EXIST. STORM SEWER
- SF — SF — PROP SILT FENCE
- PROP CONSTRUCTION FENCE
- PROP SOIL TRACKING PREVENTION MAT
- PROP INLET PROTECTION

POLLUTION PREVENTION NOTES:

1. EROSION AND SEDIMENT CONTROL BMP'S IN ADDITION TO THOSE PRESENTED ON THESE PLANS SHALL BE IMPLEMENTED AS NECESSARY TO PREVENT TURBID DISCHARGES FROM FLOWING ONTO ADJACENT PROPERTIES OR ROADWAYS, OFF SITE STORMWATER CONVEYANCES OR RECEIVING WATERS, OR ON SITE WETLANDS AND SURFACE WATERS. BMP'S SHALL BE DESIGNED, INSTALLED, AND MAINTAINED BY THE SITE OPERATOR TO ENSURE THAT OFF SITE SURFACE WATER QUALITY REMAINS CONSISTENT WITH STATE AND LOCAL REGULATIONS. [THE OPERATOR IS THE ENTITY THAT OWNS OR OPERATES THE CONSTRUCTION ACTIVITY AND HAS AUTHORITY TO CONTROL THOSE ACTIVITIES AT THE PROJECT NECESSARY TO ENSURE COMPLIANCE.]

2. OFF SITE SURFACE WATER DISCHARGES, OR DISCHARGES TO ONSITE WETLANDS OR SURFACE WATERS WITH TURBIDITY IN EXCESS OF 29 NEPHELOMETRIC TURBIDITY UNITS (NTU'S) ABOVE BACKGROUND LEVEL SHALL BE IMMEDIATELY CORRECTED. SUCH INCIDENTS SHALL BE REPORTED TO WATER RESOURCES WITHIN 24 HOURS OF THE OCCURRENCE. THE REPORT SHALL INCLUDE THE CAUSE OF THE DISCHARGE AND CORRECTIVE ACTIONS TAKEN.

3. THE OPERATOR SHALL ENSURE THAT ADJACENT PROPERTIES ARE NOT IMPACTED BY WIND EROSION, OR EMISSIONS OF UNCONFINED PARTICULATE MATTER IN ACCORDANCE WITH RULE 62-296.320(4)(C)1, F.A.C., BY TAKING APPROPRIATE MEASURES TO STABILIZE AFFECTED AREAS.

4. FUEL AND OTHER PETROLEUM PRODUCT SPILLS THAT ENTER STORMWATER DRAINS OR WATERBODIES, OR FUEL AND OTHER PETROLEUM PRODUCT SPILLS THAT ARE IN EXCESS OF 25 GALLONS SHALL BE CONTAINED, CLEANED UP, AND IMMEDIATELY REPORTED TO WATER RESOURCES. SMALLER GROUND SURFACE SPILLS SHALL BE CLEANED UP AS SOON AS PRACTICAL.

5. IF CONTAMINATED SOIL AND/OR GROUNDWATER IS DISCOVERED DURING DEVELOPMENT OF THE SITE, ALL ACTIVITY IN THE VICINITY OF THE CONTAMINATION SHALL IMMEDIATELY CEASE, AND WATER RESOURCES SHALL BE CONTACTED.

6. PRIOR TO DEMOLITION OF EXISTING ON SITE STRUCTURES AN ASBESTOS SURVEY AND/OR ASBESTOS NOTIFICATION MAY BE REQUIRED.

7. NATIONAL POLLUTANT DISCHARGE ELIMINATION SYSTEM:
   A. NPDES CONSTRUCTION GENERIC PERMIT COVERAGE SHALL BE OBTAINED AT LEAST 48 HOURS IN ADVANCE OF CONSTRUCTION COMMENCEMENT IN ACCORDANCE WITH RULE 62-621.300(4)(a), F.A.C.
   B. A COPY OF THE CERTIFIED NPDES NOI, OR A COPY OF THE FDEP COVERAGE CONFIRMATION LETTER SHALL BE POSTED AT THE SITE IN ACCORDANCE WITH RULE 62-621.300(4)(A) PART III.C.2, F.A.C.
   C. A COPY OF THE CERTIFIED NPDES NOI, OR A COPY OF THE FDEP COVERAGE CONFIRMATION LETTER SHALL BE PROVIDED TO WATER RESOURCES IN ACCORDANCE WITH RULE 62-621.300(4)(a)PART III.D.1, F.A.C.
   D. THE SWPPP SHALL BE CERTIFIED IN ACCORDANCE WITH RULE 62-621.300(4)(a)PART V.D.6, F.A.C.
   E. A COPY OF THE SWPPP, AND COPIES OF THE INSPECTION AND MAINTENANCE RECORDS SHALL BE MAINTAINED AT THE PROJECT SITE, AND SHALL BE READILY AVAILABLE TO COUNTY OR STATE INSPECTORS.

8. THE DISCHARGE OF GROUNDWATER PRODUCED THROUGH DEWATERING, TO SURFACE WATERS, OR ANY PORTION OF THE MS4 WILL REQUIRE SEPARATE PERMITTING FROM THE FLORIDA DEPARTMENT OF ENVIRONMENTAL PROTECTION (DEP). PERMIT(S) SHALL BE OBTAINED PRIOR TO THE COMMENCEMENT OF DEWATERING.

MAINTENANCE NOTES:

N.P.D.E.S. PERMIT COMPLIANCE REQUIRES INSPECTIONS EVERY 7 CALENDAR DAYS BY A NPDES QUALIFIED INSPECTOR AND PERIODIC INSPECTIONS WITHIN 24 HOURS OF ANY RAINFALL EVENT OF 0.5 INCHES OR GREATER. THESE INSPECTIONS MAY RESULT IN RECOMMENDATIONS FOR ROUTINE MAINTENANCE OF THE SOIL EROSION CONTROL DEVICES, AS WELL AS FURTHER MAINTENANCE AS OUTLINED BELOW.

1. THROUGHOUT THE CONSTRUCTION PERIOD, ALL MUD/SILT TRACKED ONTO EXISTING FDOT ROADS FROM THE SITE DUE TO CONSTRUCTION SHALL BE IMMEDIATELY REMOVED BY THE CONTRACTOR.

2. CATCH BASIN INLET AND CONCRETE FLUME FILTERS SHALL BE MAINTAINED CLEAN AT ALL TIMES THROUGHOUT THE CONSTRUCTION PERIOD. WEEKLY INSPECTIONS WILL BE PERFORMED EVERY 7 CALENDAR DAYS. IF A FILTER HAS HOLES OR IS INUNDATED WITH SEDIMENT, THE FILTER WILL REQUIRE REPLACEMENT.

3. CONSTRUCTION ACCESS AND TRACKING MAT MUST BE MAINTAINED AS NECESSARY. REPLENISH CRUSHED AGGREGATE IF PRESENT LAYER IS FILLED WITH SEDIMENT, POOLING WATER OR HAS RUTS. A NEW LAYER MAY BE ADDED IF OLD LAYERS BECOME COMPACTED.

4. SILT FENCE IS TO BE INSPECTED DAILY BY CONTRACTOR AND EVERY 7 CALENDAR DAYS BY NPDES QUALIFIED INSPECTOR. IF REPAIRS OR REPLACEMENT IS NECESSARY, IT SHALL BE PERFORMED IMMEDIATELY. THE SILT FENCE SHOULD BE TRENCHED IN, BACK-FILLED, AND STAPLED OR STAKED ACCORDING TO THE MANUFACTURER'S SPECIFICATIONS. MAINTENANCE INCLUDES THE REMOVING OF BUILT-UP SEDIMENT. WHEN THE SEDIMENT ACCUMULATES TO 1/3 OF THE HEIGHT OF THE FENCE, CONTRACTOR MAY HAVE TO REMOVE, REPLACE, RETRENCH, OR RE-BACKFILL THE FENCE IF IT FAILS. IT WOULD ALSO BE NECESSARY TO REINSTALL IF ANY PORTION OF THE FENCING WAS DAMAGED BY CONSTRUCTION MACHINERY.

5. SEEDING OR RESEEDING MAY BE REQUIRED IMMEDIATELY TO AREAS WHICH HAVE BEEN DAMAGED BY RUNOFF.

6. REMOVE ANY VISIBLE SEDIMENT FROM THE POND BOTTOM TO KEEP THE BASIN DESIGNED INFILTRATION PERFORMANCE

7. THE CONTRACTOR SHALL CONTINUOUSLY ENSURE THAT THE PERIMETER OF THE SITE, INCLUDING CONSTRUCTION ENTRANCES, IS SECURED FROM ALLOWING DEBRIS TO LEAVE THE SITE DUE TO CONSTRUCTION ACTIVITY OR RAINFALL EVENTS. A WEEKLY LOG SHALL BE UPDATED AND KEPT ON-SITE IN ACCORDANCE WITH THE NPDES PERMIT. BY BIDDING DOCUMENTS CONTRACTOR ACKNOWLEDGES HE/SHE IS AWARE OF NPDES GUIDELINES AND POLICIES AS WELL AS BEST MANAGEMENT PRACTICES AND ASSUMES SOLE RESPONSIBILITY FOR FINES IMPOSED BY GOVERNMENTAL AGENCIES DUE TO VIOLATIONS.

10 5 2.5 0 10
1"= 10'

BOHLER ENGINEERING
SITE CIVIL AND CONSULTING ENGINEERING
LAND SURVEYING
PROGRAM MANAGEMENT
LANDSCAPE ARCHITECTURE
SUSTAINABLE DESIGN
PERMITTING SERVICES
TRANSPORTATION SERVICES

THE INFORMATION, DESIGN AND CONTENT OF THIS PLAN ARE PROPRIETARY AND SHALL NOT BE COPIED OR USED FOR ANY PURPOSE WITHOUT PRIOR WRITTEN AUTHORIZATION FROM BOHLER ENGINEERING. ONLY THE PLANS IN WHICH THE SEAL OF A PROFESSIONAL ENGINEER APPEARS SHALL BE UTILIZED FOR CONSTRUCTION PURPOSES

REVISIONS

REV	DATE	COMMENT	DRAWN BY / CHECKED BY
1	2019-08-23	CITY OF DELRAY BEACH COMMENTS	LJL / AS
2	2019-09-10	SPRAB COMMENTS	LJL / AS

THIS DRAWING IS INTENDED FOR MUNICIPAL AND/OR AGENCY REVIEW AND APPROVAL. IT IS NOT INTENDED AS A CONSTRUCTION DOCUMENT UNLESS INDICATED OTHERWISE.

811 Know what's below. Call before you dig.
ALWAYS CALL 811
It's fast. It's free. It's the law.

ISSUED FOR MUNICIPAL & AGENCY REVIEW & APPROVAL

PROJECT No.:	FLB180120
DRAWN BY:	LJL
CHECKED BY:	AS
DATE:	2019-10-25
CAD I.D.:	FLB180120-OBP-1

PROJECT:
PIERRE DELRAY PHASE I - SPRAB SITE PLAN PACKAGE (AKA SUNTRUST BUILDING)

FOR

CLIENT
ZYSCOVICH ARCHITECTS

PROPOSED DEVELOPMENT
302 E ATLANTIC AVE
PALM BEACH COUNTY
DELRAY BEACH, FL

BOHLER ENGINEERING
2255 GLADES ROAD, SUITE 305E
BOCA RATON, FLORIDA 33431
Phone: (561) 571-0280
Fax: (561) 571-0281
FLORIDA BUSINESS CERT. OF AUTH. No. 30780
LANDSCAPE ARCHITECT BUSINESS LIC. NO. LC26000551

SHEET TITLE:
EROSION AND SEDIMENTATION CONTROL PLANS PHASE II

SHEET NUMBER:
C-606

REVISION 2 - 2019-09-10

PAVEMENT REPAIR DETAIL (GU 1.1)

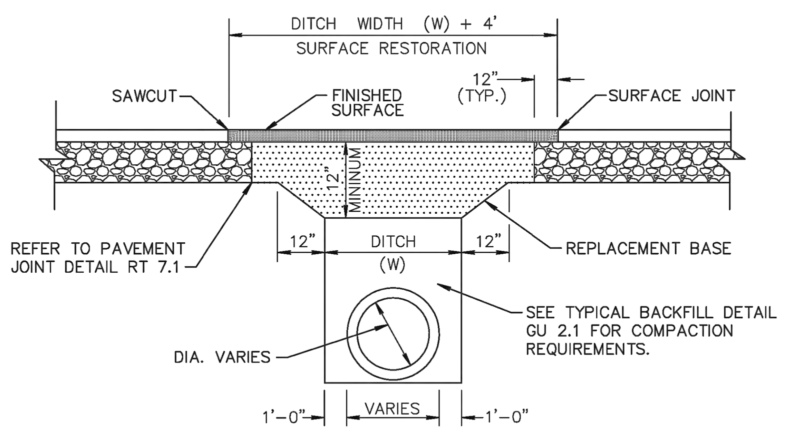

1. REPLACEMENT BASE TO BE AT MIN. 12" THICK.
2a. BASE MATERIAL SHALL BE PLACED IN TWO LIFTS AND EACH LIFT COMPACTED TO 98% MAXIMUM DENSITY PER AASHTO T-180 (MAX. LIFT THICKNESS = 6").
2b. 12" EXCAVATABLE FLOWABLE FILL MIN. 100 P.S.I. MAY BE USED IN LIEU OF 12" BASE.
3. ASPHALT CONCRETE PAVEMENT JOINTS SHALL BE MECHANICALLY SAWED.
4. ALL DISTURBED PAVEMENT MARKINGS SHALL BE RESTORED IN ACCORDANCE WITH CITY STANDARDS.
5. SURFACE MATERIAL SHALL BE F.D.O.T. TYPE S-I OR S-III ASPHALTIC CONC. (MIN. THICKNESS 1 1/2").
6. ANY PAVT. CUTS SHALL BE COLD PATCHED AT END OF EACH WORKING DAY TO FACILITATE UNHINDERED TRAFFIC FLOW.

CITY of DELRAY BEACH
ENVIRONMENTAL SERVICES DEPARTMENT
434 SOUTH SWINTON AVENUE, DELRAY BEACH, FLORIDA 33444
PAVEMENT REPAIR DETAIL — DATE: 02-13-2008 — GU 1.1

TYPICAL BACKFILL DETAIL (GU 2.1)

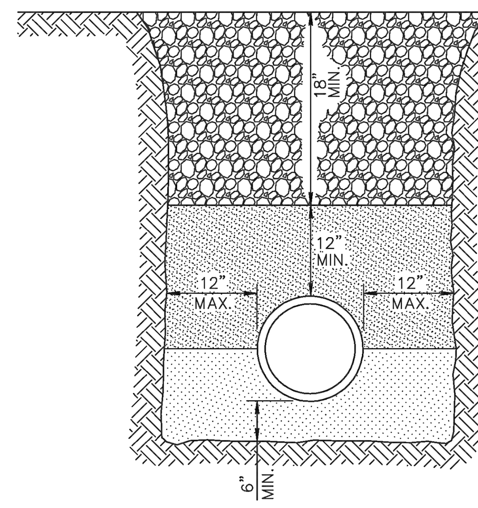

NOTES:

1. UNSUITABLE IN-SITU MATERIALS SUCH AS MUCK, DEBRIS AND LARGE ROCKS SHALL BE REMOVED; BEDDING MATERIAL AND BACKFILL CONSISTING OF WASHED AND GRADED LIMEROCK 3/8" -7/8" SIZING.
2. THE PIPE AND/OR STRUCTURE SHALL BE FULLY SUPPORTED FOR ITS ENTIRE LENGTH WITH APPROPRIATE COMPACTION UNDER THE PIPE HAUNCHES.
3. THE PIPE AND/OR STRUCTURE SHALL BE PLACED IN A DRY TRENCH.
4. BACKFILL SHALL BE FREE OF UNSUITABLE MATERIAL SUCH AS LARGE ROCK, MUCK, AND DEBRIS.
5. COMPACT BACKFILL TO 98% DENSITY UNDER PAVEMENT AND TO 95% DENSITY ELSEWHERE.(AASHTO T-180)
6. COMPACTION AND DENSITY TESTS SHALL BE COMPLETED DURING BACKFILL OPERATIONS, CONTRACTORS NOT FOLLOWING THIS PROCEDURE, FOR WHATEVER REASONS, SHALL BE REQUIRED TO RE-EXCAVATE THE AREA IN QUESTION, DOWN TO THE BEDDING MATERIAL, THEN BACKFILL FOLLOWING THE ABOVE PROCEDURES.

CITY of DELRAY BEACH — TYPICAL BACKFILL DETAIL — DATE: 06-05-08 — GU 2.1

TYPICAL GATE VALVE DETAIL 4" THRU 12" (PW 3.1)

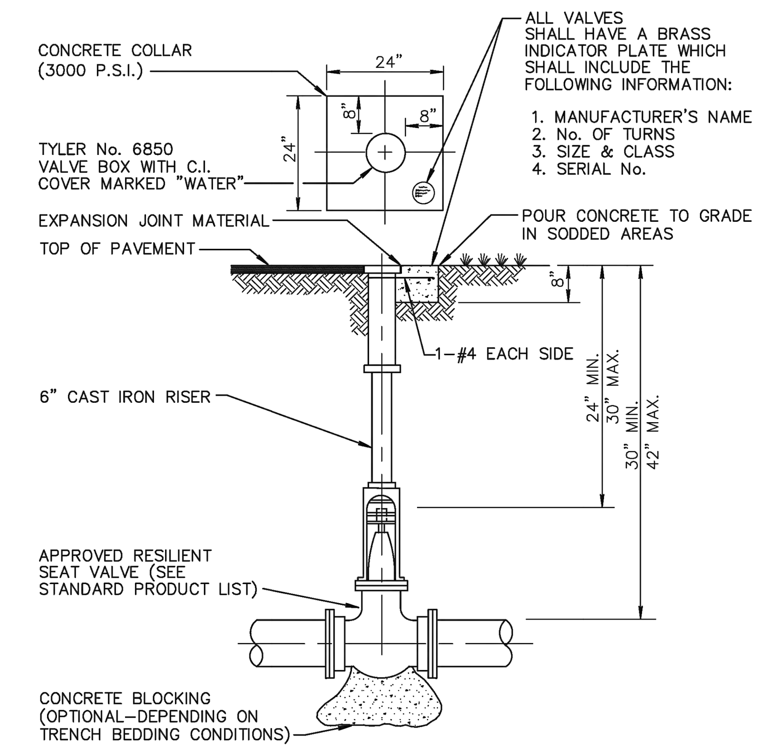

NOTES:

1. WHEN VALVE IS DEEPER THAN 30" AN EXTENSION WITH UNIVERSAL JOINT SHALL BE REQUIRED TO BRING OPERATING NUT 24"-30" BELOW FINISHED GRADE EXTENSION BOLTS & NUTS SHALL BE 316 STAINLESS STEEL. A 316 STAINLESS STEEL CENTERING PLATE SHALL ALSO BE REQUIRED.
2. AT DEAD END OR WHERE MAIN LINES CHANGE DIRECTION, VALVES SHALL BE RESTRAINED USING MECHANICAL JOINT RESTRAINTS, TIERODS, OR OTHER APPROVED RESTRAINT.

CITY of DELRAY BEACH — TYPICAL GATE VALVE DETAIL 4" THRU 12" — DATE: 06-27-14 — PW 3.1

CAST IRON VALVE BOXES, TWO PIECE (PW 3.2)

ITEM	BOX COMPLETE EXTENSION IN INCHES	WT.	TOP SECTION W/LID LENGTH	TOP SECTION W/LID WT.	BOTTOM LENGTH	BOTTOM WT.	PIECES PER PKG.
461-S	19-22	60	10	35	15	25	..
462-S	27-32	70	10	35	24	35	..
562-S	27-37	80	16	45	24	35	20
563-S	33-43	85	16	45	30	40	20
564-S	39-50	90	16	45	36	45	20
662-S	36-52	105	26	65	30	40	20
664-S	39-60	110	26	65	36	45	20
666-S	51-71	135	26	65	**48	70	20
668-S	62-82	145	26	65	**60	80	20

**MAY BE FURNISHED IN TWO PIECES SCREWED TOGETHER TO MAKE THE LENGTH REQUIRED.

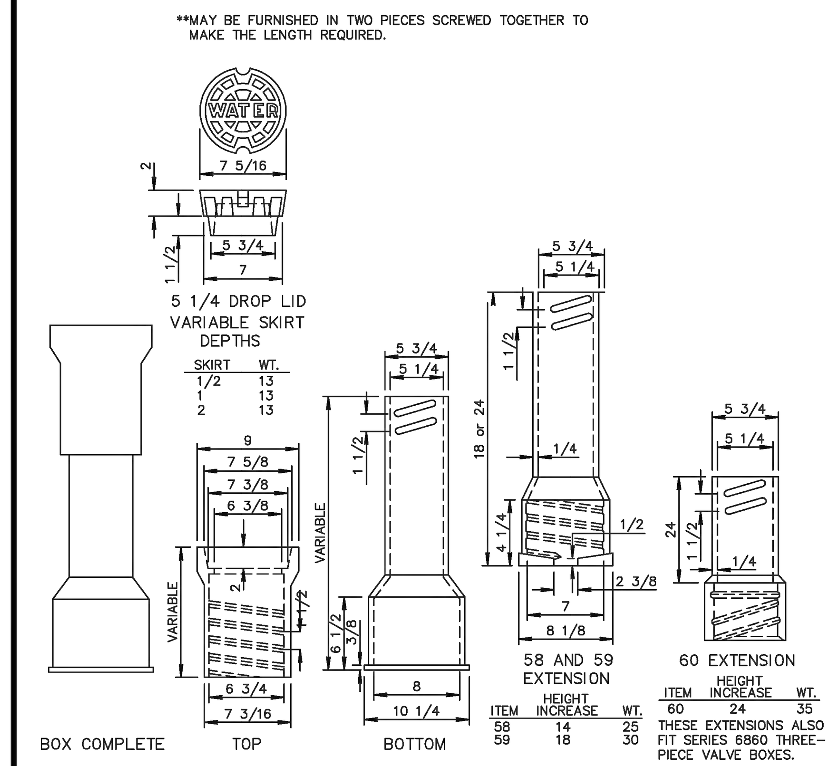

NOTE: LOCKING LIDS WILL NOT BE ACCEPTED.

CITY of DELRAY BEACH — CAST IRON VALVE BOXES, TWO PIECE — DATE: 02-28-08 — PW 3.2

TYPICAL SERVICE CONNECTION (PW 9.1a)

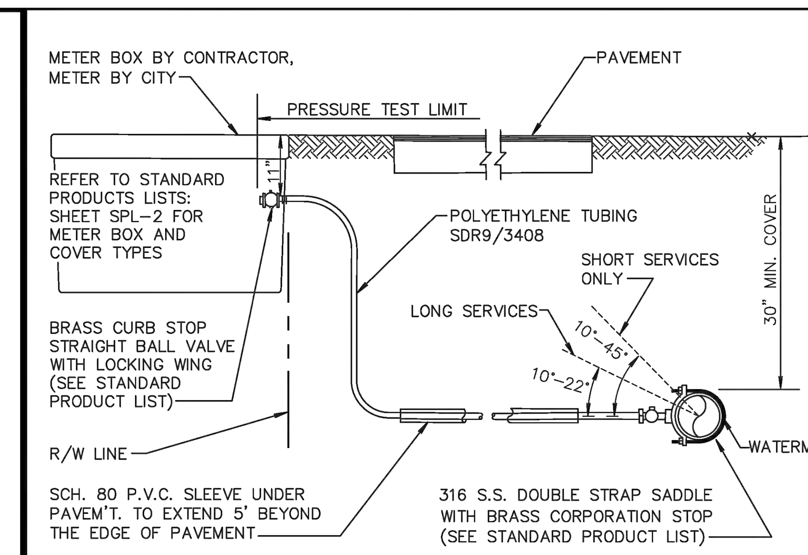

NOTES:

1. SUCCESSIVE TAPS INTO THE WATER MAIN SHALL BE SPACED A MINIMUM OF 18" ON CENTER.
2. SERVICE LINES SHALL NOT BE PLACED UNDER DRIVEWAYS.
3. ALL METERS REQUIRE A LOCKING BRASS CURB STOP WITH LOCK WING (1"MIN.).
4. NO FITTINGS BETWEEN CORPORATION STOP AND BRANCH ASSEMBLY.
5. MAXIMUM SERVICE LENGTH IS 100' TO METER.
6. CASING PIPE I.D. SHALL BE SERVICE O.D. PLUS 1" MINIMUM.
7. MINIMUM BEND RADIUS ON SERVICES SHALL BE 14" ON ALL SERVICES BEHIND METER.
8. METER SIZE WILL BE DETERMINED BY PUBLIC UTILITIES DEPT. UPON APPLICATION FOR SERVICE.
9. ALL VALVES TO BE BALL VALVES.
10. METER BOX SHALL BE PROVIDED AND INSTALLED BY CONTRACTOR.
11. ALL SERVICES UNDER ROADWAYS ARE TO BE INSTALLED BY TRENCHLESS METHOD, UNLESS OTHERWISE APPROVED.
12. ALL EXISTING SERVICES TO BE FIELD VERIFIED BY BUILDER/CONTRACTOR/DEVELOPER; IF EXISTING SERVICE IS GALVANIZED, BUILDER/CONTRACTOR/DEVELOPER SHALL REPLACE WITH POLYETHYLENE PIPING FROM MAIN TO THE METER.

CITY of DELRAY BEACH — TYPICAL SERVICE CONNECTION — DATE: 11-19-2015 — PW 9.1a

TYPICAL URBAN/REDEVELOPMENT AREA SERVICE CONNECTION IN DRIVEWAYS OR SIDEWALKS (PW 9.1b)

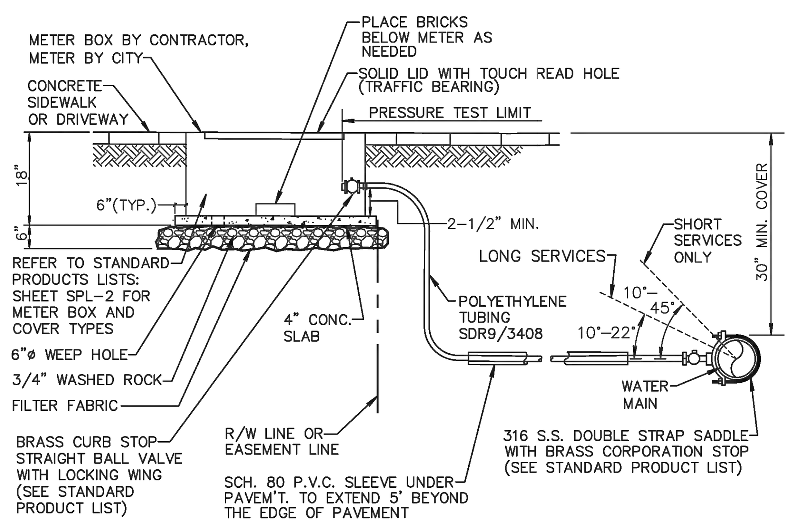

NOTES:

1. SUCCESSIVE TAPS INTO THE WATER MAIN SHALL BE SPACED A MINIMUM OF 18" ON CENTER.
2. ALL METERS REQUIRE A LOCKING BRASS CURB STOP WITH LOCK WING (1"MIN.).
3. NO FITTINGS BETWEEN CORPORATION STOP AND BRANCH ASSEMBLY.
4. MAXIMUM SERVICE LENGTH IS 100' TO METER.
5. CASING PIPE I.D. SHALL BE SERVICE O.D. PLUS 1" MINIMUM.
6. MINIMUM BEND RADIUS ON SERVICES SHALL BE 14" ON ALL SERVICES BEHIND METER.
7. METER SIZE WILL BE DETERMINED BY PUBLIC UTILITIES DEPT. UPON APPLICATION FOR SERVICE.
8. ALL VALVES TO BE BALL VALVES.
9. METER BOX SHALL BE PROVIDED AND INSTALLED BY CONTRACTOR.
10. ALL SERVICES UNDER ROADWAYS ARE TO BE INSTALLED BY TRENCHLESS METHOD, UNLESS OTHERWISE APPROVED.
11. ALL EXISTING SERVICES TO BE FIELD VERIFIED BY BUILDER/CONTRACTOR/DEVELOPER; IF EXISTING SERVICE IS GALVANIZED, BUILDER/CONTRACTOR/DEVELOPER SHALL REPLACE WITH POLYETHYLENE PIPING FROM MAIN TO METER.

CITY of DELRAY BEACH — TYPICAL URBAN/REDEVELOPMENT AREA SERVICE CONNECTION IN DRIVEWAYS OR SIDEWALKS — DATE: 11-19-2015 — PW 9.1b

DOUBLE DETECTOR CHECK VALVE (PW 10.1)

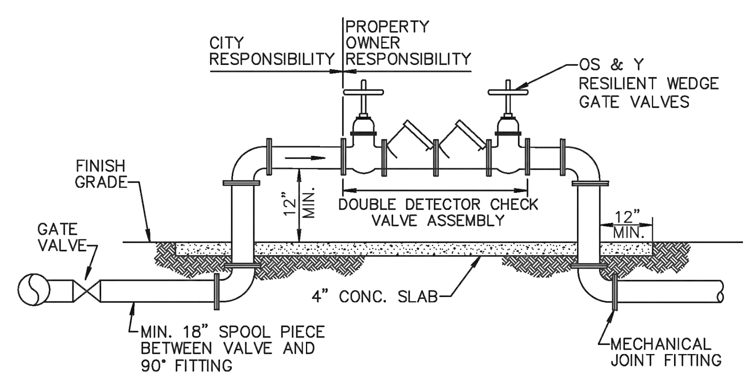

NOTES:

1. FOR ALL SERVICES GREATER THAN 2" DIA.
2. ALL PIPE AND FITTINGS SHALL BE CLASS 52 DUCTILE IRON CEMENT LINED WITH CEMENT LINED DUCTILE IRON FLANGE FITTINGS FOR ABOVE GROUND USE. MECHANICAL JOINT SHALL BE USED UNDERGROUND IN ACCORDANCE WITH AWWA STANDARDS.
3. THE DOUBLE DETECTOR CHECK VALVE ASSEMBLY SHALL MEET AWWA M14 AND AWWA C511-89, AND APPROVAL OF ENVIRONMENTAL SERVICES DEPARTMENT.
4. CERTIFICATION OF PROPER INSTALLATION AND OPERATION WILL BE REQUIRED FROM A CERTIFIED BACKFLOW PREVENTION TECHNICIAN PRIOR TO WATER MAIN ACCEPTANCE BY THE CITY OF DELRAY BEACH.
5. THE PROPERTY OWNER SHALL BE RESPONSIBLE FOR THE PROPER OPERATION, MAINTENANCE AND TESTING OF THE DOUBLE DETECTOR CHECK VALVE ASSEMBLY.
6. BOLLARDS TO BE USED IF THE ASSEMBLY IS WITHIN 5' OF THE PAVEMENT, REFER TO BOLLARD DETAIL PW 5.2.
7. ALL TWO INCH DOUBLE DETECTOR CHECK VALVE, SHALL BE BRASS OR TYPE "L" COPPER TUBING
8. USE OF OTHER PIPE MATERAILS WITH APPROVAL OF WATER SEWER MANAGER.
9. CITY MAINTAINS UP TO THE FIRST O S & Y VALVE.

CITY of DELRAY BEACH — DOUBLE DETECTOR CHECK VALVE — DATE: 12-16-2015 — PW 10.1

REDUCED PRESSURE ZONE BACKFLOW PREVENTER (PW 10.2)

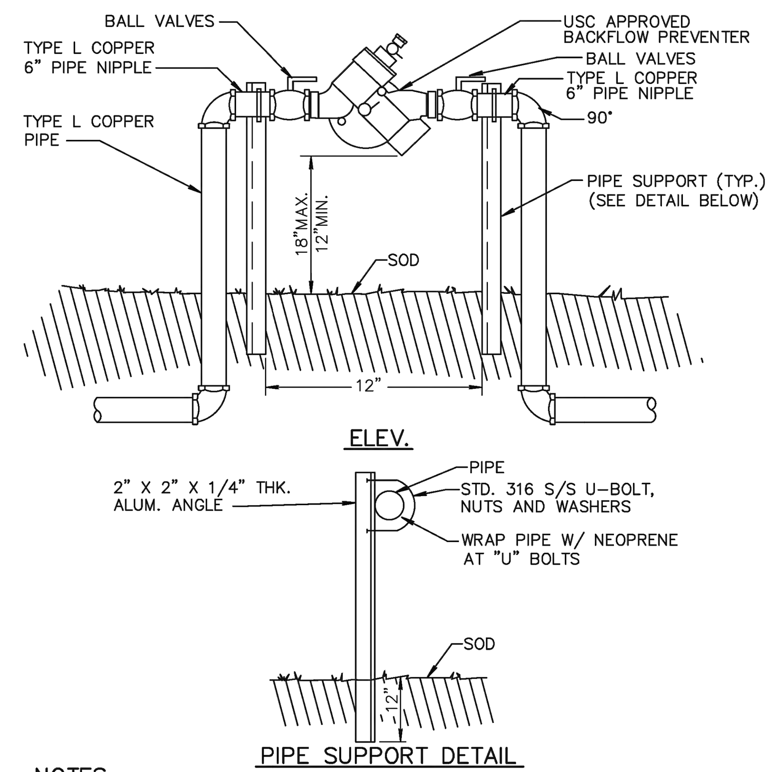

NOTES:

1. FOR ALL SERVICES LESS THAN OR EQUAL TO 2" DIA.
2. ABOVE GRADE PIPING SHALL BE BRASS OR TYPE "L" COPPER TUBING.
3. ALL COPPER JOINTS SHALL BE MADE WITH 95/5 SOLDER.
4. RPZ BACKFLOW PREVENTER IS REQUIRED IN ACCORDANCE WITH CITY OF DELRAY BEACH CODE OF ORDINANCES TITLE V, CHAPTER 52.80.
5. USE OF OTHER PIPE MATERIALS WITH APPROVAL OF DEPUTY DIRECTOR OF UTILITIES.
4. RPZ BACKFLOW PREVENTER IS REQUIRED FOR ALL COMMERCIAL PROPERTIES AND ALL RESIDENTAL PROPERTIES WITH FIRE SPRINKLER SYSTEMS.

CITY of DELRAY BEACH — REDUCED PRESSURE ZONE BACKFLOW PREVENTER — DATE: 06-27-2014 — PW 10.2

ANTI-SIPHON PRESSURE TYPE VACUUM BREAKER (PW 10.3)

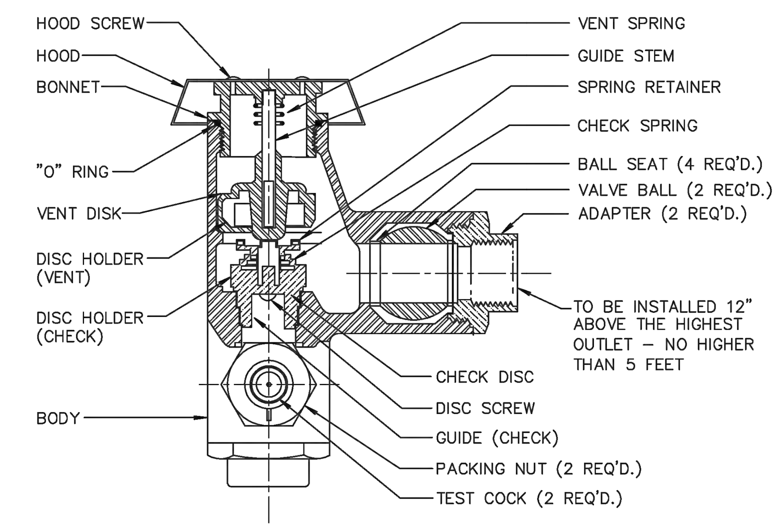

TYPICAL IRRIGATION SYSTEM
ANTI-SIPHON PRESSURE TYPE
VACUUM BREAKER

NOTES:

1. WATTS REGULATOR COMPANY OR EQUIVALENT.
2. VALVE SHALL MEET OR EXCEED THE A.S.S.E., BS&A AND U.S.C.F. REQUIREMENTS.
3. SHALL ALSO BE LISTED BY IAPMO (UPC).
4. USE OF OTHER PIPE MATERIALS WITH APPROVAL OF DEPUTY DIR. OF UTILITIES.
5. ABOVE GRADE PIPING SHALL BE PVC OR COPPER.

CITY of DELRAY BEACH — ANTI-SIPHON PRESSURE TYPE VACUUM BREAKER — DATE: 01-18-2006 — PW 10.3

TYPICAL COMMERCIAL CLEANOUT (WW 5.2)

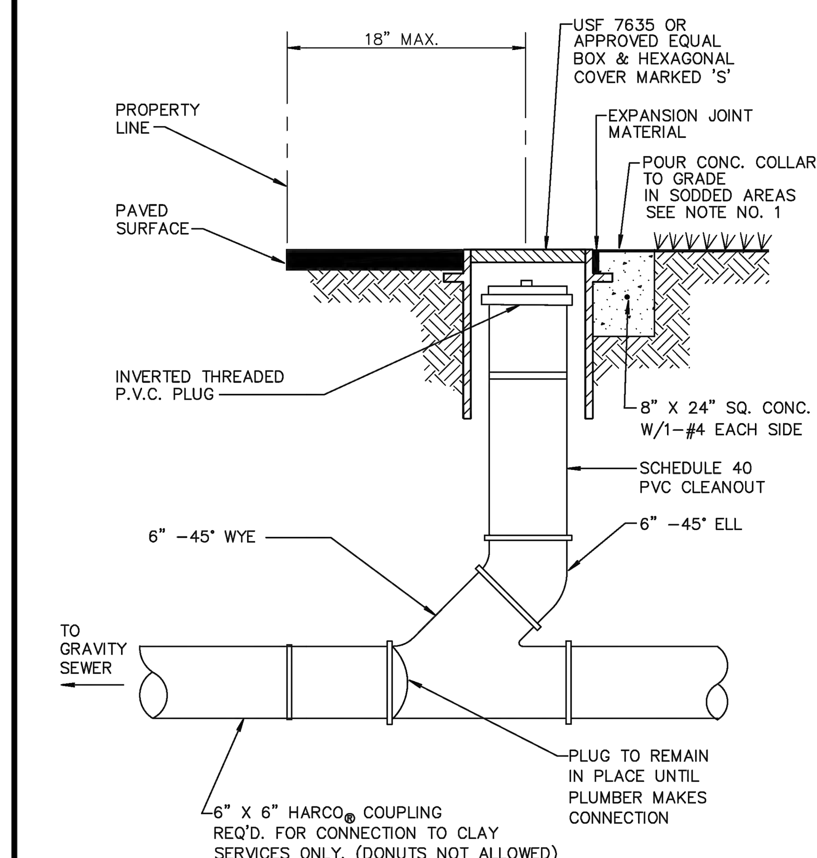

NOTE:

1. INVERTED BRASS CAP SHALL BE USED IN GRASS AREAS IN LIEU OF CASTING AND CONE COLLAR.
2. MINIMUM DEPTH OF SERVICE LATERAL SHALL BE 3 FEET.

CITY of DELRAY BEACH — TYPICAL COMMERCIAL CLEANOUT — DATE: 06-27-2014 — WW 5.2

PRESSURE PIPE NOTES (PP 1.1)

PRESSURE PIPE NOTES:

1. THERE SHALL BE 30" MINIMUM COVER FROM FINISHED GRADE TO TOP OF PIPE. FOR PIPE SIZE 10" AND LARGER THERE SHALL BE 36" MINIMUM COVER.
2.a. DUCTILE IRON PIPE (DIP) FOR FORCE MAINS SHALL BE CLASS 350 EPOXY LINED IN ACCORDANCE WITH AWWA C550.
2.b. DUCTILE IRON PIPE (DIP) FOR WATER MAINS SHALL BE CLASS 350 IN ACCORDANCE WITH AWWA C151 (ANSI A21.51), AND SHALL HAVE AN INTERNAL LINING OF CEMENT MORTAR IN ACCORDANCE WITH AWWA C104/ A21.4.
3. C-900 PVC PRESSURE PIPE MAY BE USED IN LIEU OF DIP WATER MAIN METAL TAPE ABOVE C-900
4. ALL FITTINGS SHALL BE CLASS 350 DUCTILE IRON WITH MECHANICAL JOINTS AND EPOXY LINING.
5. WATER MAIN AND SEWAGE FORCE MAIN VALVES 12 INCHES AND SMALLER SHALL BE RESILIENT WEDGE GATE VALVES IN ACCORDANCE WITH AWWA C509. WATER MAIN VALVES LARGER THAN 12 INCHES SHALL BE BUTTERFLY VALVES IN ACCORDANCE WITH AWWA C504. SEWAGE FORCE MAIN VALVES LARGER THAN 12 INCHES SHALL BE RESILIENT WEDGE GATE VALVES IN ACCORDANCE WITH AWWA C515
6. ALL TRENCHING, PIPE-LAYING, BACKFILL, PRESSURE TESTING, AND DISINFECTION MUST COMPLY WITH CITY AND HEALTH DEPARTMENT STANDARDS.
7. WATER AND FORCE MAINS SHALL BE PIGGED, AS WELL AS, PRESSURE TESTED FOR A PERIOD OF NOT LESS THAN TWO HOURS AT 150 PSI IN ACCORDANCE WITH ANSI/AWWA C600 LATEST STANDARDS. ALLOWABLE LEAKAGE SHALL BE DETERMINED AS FOLLOWS:

$$L = \frac{(S)(D)(P)^{0.50}}{148{,}000} X(.50)$$

WHERE:
L = ALLOWABLE LEAKAGE (GALLONS PER HOUR)
S = PIPE LENGTH (FEET)
D = NOMINAL DIAMETER OF PIPE (INCHES)
P = AVERAGE TEST PRESSURE (PSI)

8. RESTRAINTS SHALL BE PROVIDED AT ALL FITTINGS AS SHOWN ON PP2.1
9. PRIOR TO ANY TESTING UNDER FUTURE PAVEMENT, ROCK SHALL BE FINISHED & PRIMED OR 1ST LIFT OF ASPHALT PLACED.
10. PIG SIZE SHALL BE PIPE DIA. PLUS 2" OR NEXT LARGER DIA.
11. NO PROPOSED STRUCTURES SHALL BE INSTALLED WITHIN A HORIZONTAL DISTANCE OF 10-FEET FROM ANY EXISTING OR PROPOSED WATER MAINS, OR FORCE MAINS.
12. LINE STOPS SHALL BE INSTALLED A MINIMUM OF 3 PIPE LENGHTS FROM LOCATION OF PIPE REMOVED, OTHERWISE, PROVIDE NECESSARY JOINT RESTRAINTS.

CITY of DELRAY BEACH — PRESSURE PIPE NOTES — DATE: 06-27-2014 — PP 1.1

PIPE RESTRAINT TABLE FOR PRESSURE PIPE (SHEET 1 OF 2) (PP 2.1a)

MINIMUM LENGTHS OF PIPE (FT) TO BE RESTRAINED

FITTING TYPE		PIPE SIZE 4"	6"	8"	10"	12"	16"	20"	24"
90° HORIZ. BEND		14	20	25	30	35	45	54	62
45° HORIZ. BEND		6	8	11	13	15	19	22	26
22.5° HORIZ. BEND		3	4	5	6	7	9	11	12
11.25° HORIZ. BEND		1	2	3	3	4	4	5	6
90° VERT. OFFSET	UPPER BEND	55	79	103	125	147	189	228	266
	LOWER BEND	22	38	49	59	69	88	106	123
45° VERT. OFFSET	UPPER BEND	22	32	42	51	60	77	93	109
	LOWER BEND	10	14	19	23	28	35	43	50
22.5° VERT. OFFSET	UPPER BEND	7	12	17	21	26	34	42	49
	LOWER BEND	2	4	6	8	10	14	17	21
11.25° VERT. OFFSET	UPPER BEND	3	4	6	9	11	15	19	22
	LOWER BEND	1	1	1	2	3	5	7	8
PLUG (DEAD END)		32	45	59	70	83	107	129	151
INLINE VALVE		32	45	59	70	83	107	129	151
TEE (BRANCH RESTRAINT)	4"X0	23							
	6"X0	21	35						
	8"X0	18	34	47					
	10"X0	16	32	46	58				
	12"X0	13	30	44	57	69			
	16"X0	7	26	41	55	67	90		
	20"X0	1	21	38	52	65	88	109	
	24"X0	1	16	34	49	62	86	108	129
REDUCER (LARGER PIPE RESTRAINT)	6"X0	23							
	8"X0	38	25						
	10"X0	57	43	24					
	12"X0	72	60	44	41				
	16"X0	99	90	78	75	45			
	20"X0	123	116	107	105	81	45		
	24"X0	146	140	132	131	111	82	45	

RESTRAIN PIPE ONE BELL PAST MINIMUM DISTANCE

CITY of DELRAY BEACH — PIPE RESTRAINT TABLE FOR PRESSURE PIPE (SHEET 1 OF 2) — DATE: 08-01-2011 — PP 2.1a

PIPE RESTRAINT TABLE FOR PRESSURE PIPE (SHEET 2 OF 2) (PP 2.1b)

NOTES:

1. THE DATA IN THE PREVIOUS TABLE ARE BASED UPON THE FOLLOWING INSTALLATION CONDITIONS:
   SOIL TYPE ....SAND
   TEST PRESSURE ....150 PSI, 200 PSI FOR PIPES LARGER THAN 24"
   DEPTH OF BURY ....3'
   TRENCH TYPE 3
   SAFETY FACTOR 1.5
   VERTICAL OFF-SET ....3'
   MINIMUM PIPE LENGTHS ALONG TEE RUN ....5'
2. THE RESTRAINED PIPE LENGTHS APPLY TO DUCTILE IRON PIPE AND PVC PIPE.
3. ALL JOINTS BETWEEN UPPER AND LOWER BENDS SHALL BE RESTRAINED.
4. RESTRAINED PIPE LENGTHS FOR VALVES APPLY TO PIPE ON BOTH SIDES OF VALVES.
5. THE PREVIOUS TABLE SHALL SERVCE AS A GENERAL DESIGN GUIDE ONLY. IT IS THE ENGINEER OF RECORD'S RESPONSIBILITY TO JUSTIFY AND DOCUMENT ANY DEVIATIONS FROM THE PIPE LENGTHS SPECIFIED IN THE PREVIOUS TABLE.
6. SOURCES: EBAA IRON RESTRAINT LENGTH CALCULATION PROGRAM FOR PVC PIPE, RELEASE 3.1 AND DIPRA THRUST RESTRAINT FOR DUCTILE IRON PIPE, RELEASE 3.2.
7. RESTRAIND JOINTS SHALL EXTEND ONE JOINT BEYOND MIN. LENGTH REQUIRED.

CITY of DELRAY BEACH — PIPE RESTRAINT TABLE FOR PRESSURE PIPE (SHEET 2 OF 2) — DATE: 08-01-2011 — PP 2.1b

TYPICAL 2" TERMINAL BLOW-OFF FOR TEMPORARY DEAD ENDS (PW 6.1a)

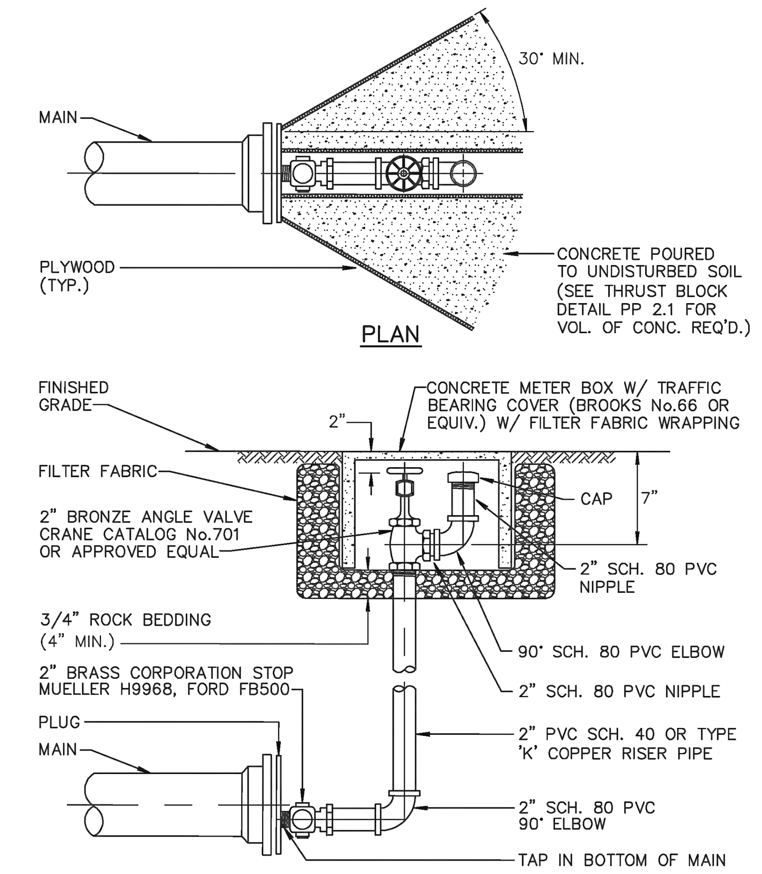

NOTES:

1. GALVANIZED PIPING AND FITTINGS SHALL NOT BE USED.
2. JOINT RESTRIANTS TO BE INSTALLED MIN. TWO JOINTS BEFORE DEAD END.
3. HYDRO-GUARD IS TO BE USED AT ALL PERMANENT DEAD ENDS. (SEE 6.2b)

CITY of DELRAY BEACH — TYPICAL 2" TERMINAL BLOW-OFF FOR TEMPORARY DEAD ENDS — DATE: 01-18-2006 — PW 6.1a

2

BOHLER ENGINEERING
SITE CIVIL AND CONSULTING ENGINEERING
LAND SURVEYING
PROGRAM MANAGEMENT
LANDSCAPE ARCHITECTURE
SUSTAINABLE DESIGN
PERMITTING SERVICES
TRANSPORTATION SERVICES

THE INFORMATION, DESIGN AND CONTENT OF THIS PLAN ARE PROPRIETARY AND SHALL NOT BE COPIED OR USED FOR ANY PURPOSE WITHOUT PRIOR WRITTEN AUTHORIZATION FROM BOHLER ENGINEERING. ONLY APPROVED, SIGNED AND SEALED PLANS SHALL BE UTILIZED FOR CONSTRUCTION PURPOSES. © BOHLER ENGINEERING

REVISIONS

REV	DATE	COMMENT	DRAWN BY / CHECKED BY
1	2019-08-23	CITY OF DELRAY BEACH COMMENTS	LJL / AS
2	2019-09-10	SPRAB COMMENTS	LJL / AS

THIS DRAWING IS INTENDED FOR MUNICIPAL AND/OR AGENCY REVIEW AND APPROVAL. IT IS NOT INTENDED AS A CONSTRUCTION DOCUMENT UNLESS INDICATED OTHERWISE.

ALWAYS CALL 811
It's fast. It's free. It's the law.

ISSUED FOR MUNICIPAL & AGENCY REVIEW & APPROVAL

PROJECT No.: FLB180120
DRAWN BY: LJL
CHECKED BY: AS
DATE: 2019-10-25
CAD I.D.: FLB180120-SDP-1

PROJECT:
PIERRE DELRAY PHASE 1 - SPRAB SITE PLAN PACKAGE (AKA SUNTRUST BUILDING)
FOR
CLIENT
ZYSCOVICH ARCHITECTS
PROPOSED DEVELOPMENT
302 E ATLANTIC AVE
PALM BEACH COUNTY
DELRAY BEACH, FL

BOHLER ENGINEERING
2255 GLADES ROAD, SUITE 305E
BOCA RATON, FLORIDA 33431
Phone: (561) 571-0280
Fax: (561) 571-0281
FLORIDA BUSINESS CERT. OF AUTH. No. 30780
LANDSCAPE ARCHITECT BUSINESS LIC. No LC26000551

SHEET TITLE:
DETAILS

SHEET NUMBER:
C-901

REVISION 2 - 2019-09-10

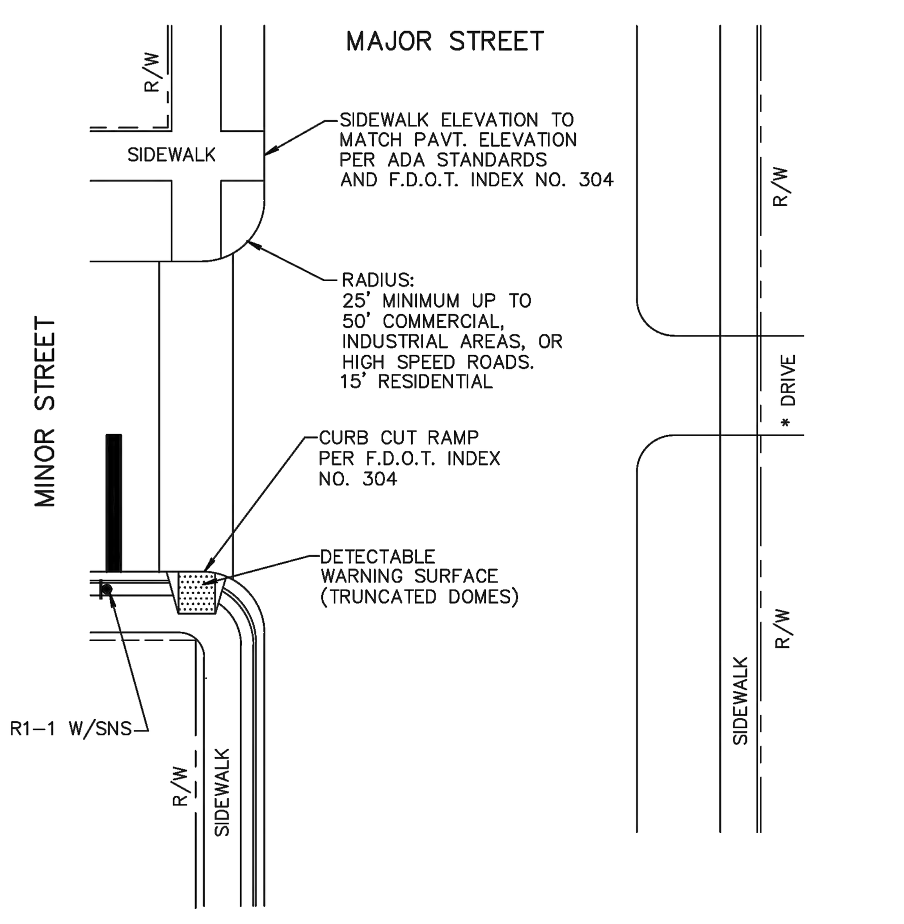

* DRIVEWAY DESIGN TO BE PER CITY LAND DEVELOPMENT REGULATIONS, FDOT STANDARD SPECIFICATIONS. ALL DESIGNS SUBJECT TO CITY ENGINEER APPROVAL.
* ALL WALKS CROSSING A VEHICULAR AREA SHALL HAVE A DETECTABLE WARNING SURFACE (TRUNCATED DOME) IN ACCORDANCE WITH THE FLORIDA BUILDING CODE, CHAPTER II, FL. ACCESSIBILITY CODE FOR BUILDING CONSTRUCTION.

CITY of DELRAY BEACH — ENVIRONMENTAL SERVICES DEPARTMENT — 434 SOUTH SWINTON AVENUE, DELRAY BEACH, FLORIDA 33444 | INTERSECTION DETAIL | DATE: 07-02-2014 | RT 3.1

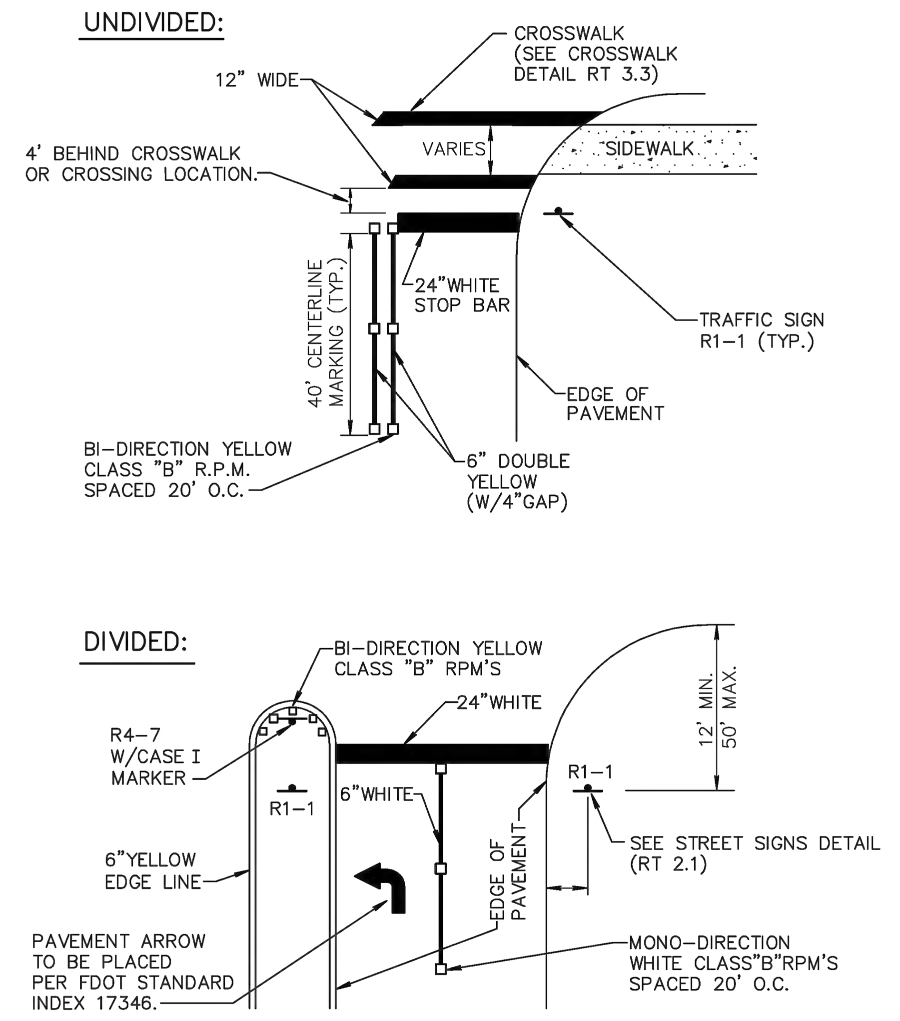

NOTE: ALL STRIPING AND DELINEATION TO CONFORM TO THE REQUIREMENTS OF THE MANUAL ON UNIFORM TRAFFIC CONTROL DEVICES, (MUTCD) LATEST ED.

CITY of DELRAY BEACH — ENVIRONMENTAL SERVICES DEPARTMENT | INTERSECTION TRAFFIC CONTROL STOP CONDITION | DATE: 08-03-2011 | RT 3.2

STANDARD CROSSWALK

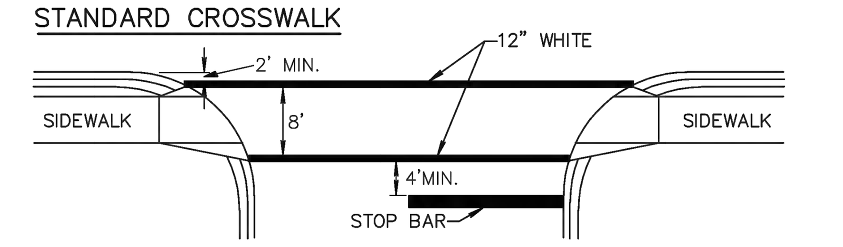

- STANDARD CROSSWALK STRIPING TO BE INSTALLED IN THE FOLLOWING LOCATIONS:
  - ALONG COLLECTORS OR ARTERIALS
  - BIKE PATH CROSSINGS
  - CROSS WALKS WITH HIGH EXPECTED PEDESTRIAN VOLUME
  - SCHOOL ACCESS ROUTES
- SIGNING REQUIRED AS PER FDOT STANDARD INDEX NO. 17346

SCHOOL CROSSWALK

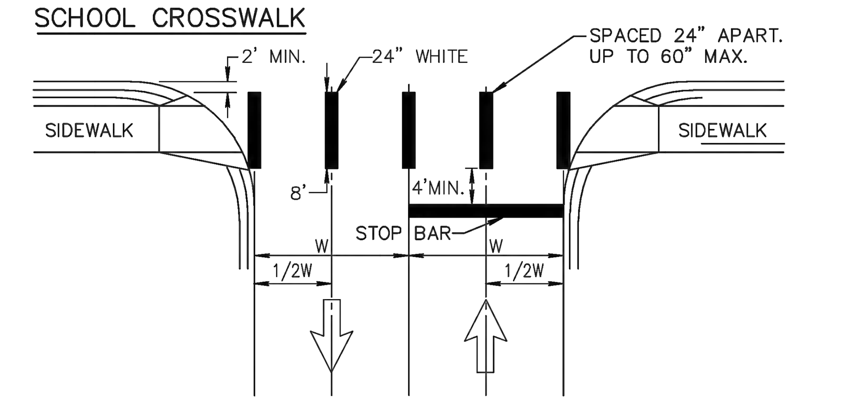

- SCHOOL CROSSWALK STRIPING TO BE USED ONLY AT DESIGNATED SUPERVISED SCHOOL CROSSING
- SIGNS AND ADVANCED PAVEMENT MESSAGES TO BE DESIGNED AND INSTALLED PER FDOT STANDARD (INDEX NO. 17346)
- CROSSWALKS LOCATED MIDBLOCK MIN. WIDTH 10'ALL CROSSWALK MARKINGS SHALL BE WHITE.
- LONGITUDINAL LINES IN SPECIAL EMPHASIS CROSSWALK SHALL BE 24" WIDE AND SPACED TO AVOID THE WHEEL PATH OF VEHICLES AS SHOWN IN DETAIL. THE SPACE BETWEEN MARKINGS SHALL NOT EXCEED 60". A LONGITUDINAL MARKING SHALL BE CENTERED AT EACH LANE LINE. ADDITIONAL LONGITUDINAL MAKINGS SHALL BE PLACED AT THE CENTER OF EACH LINE.
- WHERE THE CROSSWALK IS SKEWED TO THE LANE LANE LINES, THE SPECIAL EMPHASIS LONGITUDAL LINES SHOULD BE PARALLEL TO THE LANE LINE.

CITY of DELRAY BEACH — ENVIRONMENTAL SERVICES DEPARTMENT | CROSSWALK DETAILS | DATE: 08-03-2011 | RT 3.3

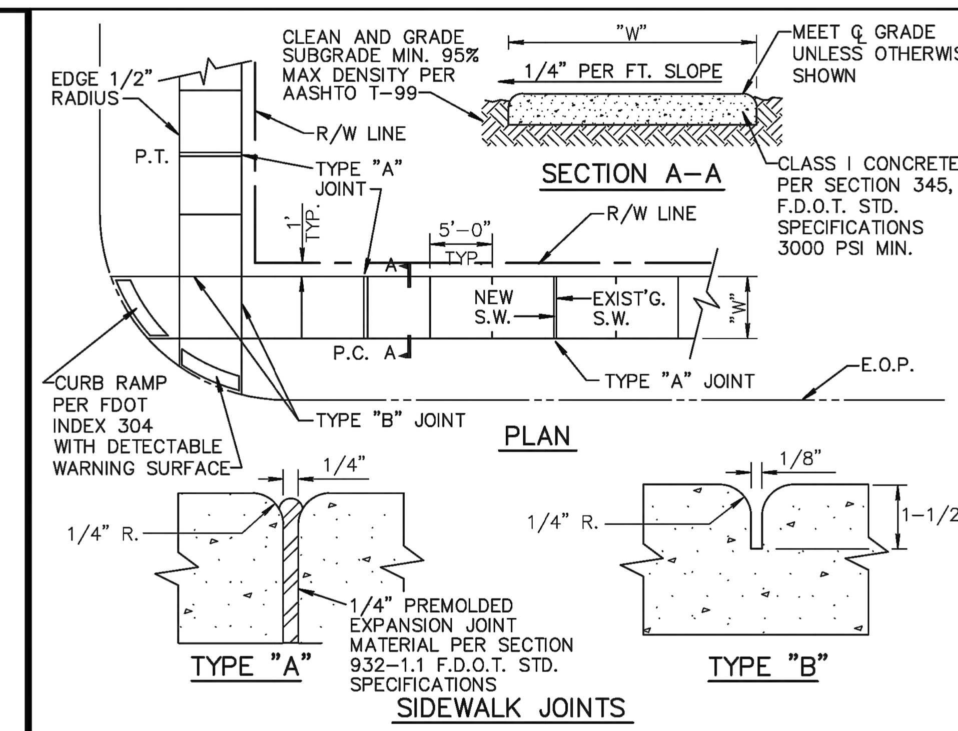

NOTE:
1. ALL SIDEWALKS SHALL BE CONSTRUCTED THRU DRIVEWAYS.
2. ALL SIDEWALKS SHALL INCLUDE ADA COMPLIANT RAMPS @ INTERSECTIONS.
2. ALL SIDEWALKS SHALL INCLUDE CROSS SLOPE AND RUNNING SLOPE IN ACCORDANCE WITH ADA REQUIREMENTS.
4. CURB RAMP DETECTALE WARNING SURFACE SHALL EXTEND THE FULL WIDTH OF THE RAMP AND 24" DEEP

TABLE OF SIDEWALK THICKNESS - "T"	
RESIDENTIAL AREAS	4"
WITHIN 10' OF CROSS-STREETS, AT DRIVEWAYS & OTHER AREAS	6",9" @E.O.P.

TABLE OF SIDEWALK WIDTHS - "W"	
SINGLE-FAMILY AREAS	5'
MULTI-FAMILY AREAS	5'
OTHER AREAS AS SPECIFIED BY THE CITY ENGINEER.	

TABLE OF SIDEWALK JOINTS

TYPE	LOCATION
"A"	P.C. AND P.T. OF CURVES JUNCTION OF EXISTING & NEW SIDEWALKS & EVERY 30'
"B"	5'-0" CENTER TO CENTER ON SIDEWALKS SCORED DURING PLACEMENT OR SAWCUT WITHIN 24 HOURS OF PLACEMENT.
"A"	WHERE SIDEWALK ABUTS CONCRETE CURBS, DRIVEWAYS, AND SIMILAR STRUCTURES.

CITY of DELRAY BEACH — ENVIRONMENTAL SERVICES DEPARTMENT | SIDEWALK CONSTRUCTION | DATE: 07-02-2014 | RT 5.1

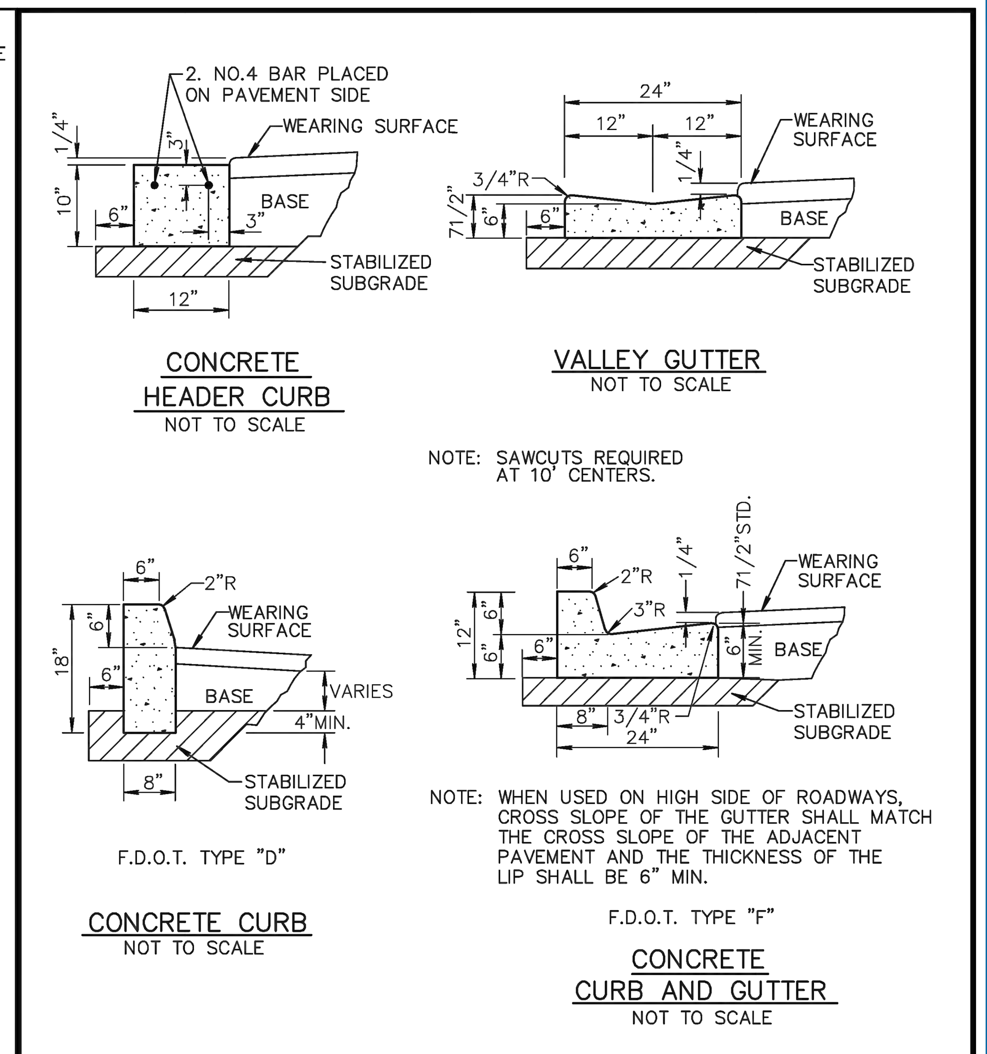

NOTES:
1. ROADWAY SUBGRADE SHALL IN ALL CASES EXTEND BELOW CURBING.
2. SAWCUTS AT 10' CENTERS SHALL BE MADE WITHIN 24 HOURS OF CONCRETE PLACEMENT.

CITY of DELRAY BEACH — ENVIRONMENTAL SERVICES DEPARTMENT | CURB AND GUTTER SECTIONS | DATE: 04-08-08 | RT 6.1

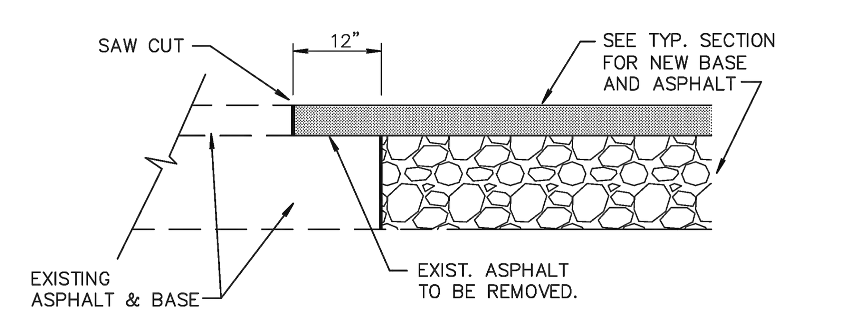

NEW CONSTRUCTION PAVEMENT JOINT

NOTE:
THIS METHOD OF PAVEMENT JOINT SHALL BE USED FOR ANY APPLICATION OR CONSTRUCTION WHERE PROPOSED PAVEMENT AND BASE WILL BE CONNECTED TO EXISTING PAVEMENT AND BASE.

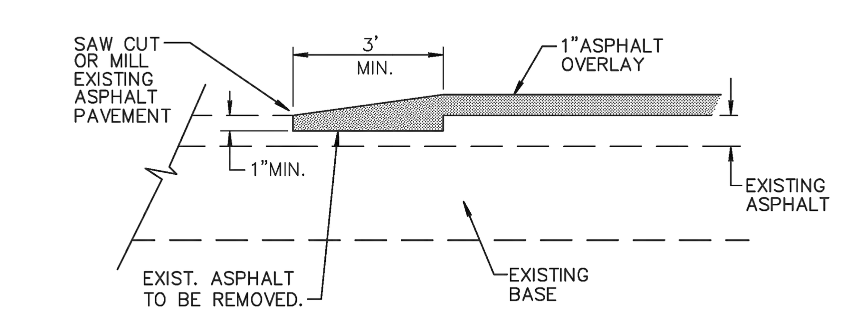

NEW OVERLAY PAVEMENT JOINT

NOTE:
THIS METHOD OF PAVEMENT JOINT SHALL BE USED FOR ANY APPLICATION OR CONSTRUCTION WHERE PROPOSED PAVEMENT WILL BE CONNECTED TO EXISTING PAVEMENT.

CITY of DELRAY BEACH — ENVIRONMENTAL SERVICES DEPARTMENT | PAVEMENT JOINT | DATE: 12-30-2002 | RT 7.1

PAVEMENT MARKING SPECIFICATIONS

All Pavement markings to be installed per these typicals, plans and specifications, and as directed by the City Engineer and shall conform to the requirements of F.D.O.T. and the manual on uniform traffic control devices, (MUTCD).

PERMANENT MARKINGS

Installation:
- All markings shall be installed by the extruded method.
- Markings shall be free of weaves, bows, drips, drags, and other degrading items.
- Chalk shall be used for all layout markings

Materials:
- All materials shall be alkyd or hydrocarbon thermoplastic meeting all FDOT specifications.

Thickness:
- All markings shall be installed to yield 90 mils of material measured above the pavement surface.

Spheres:
- Reflective glass sheres are to be applied to all stripes and markings per FDOT specifications.

Alternate Material:
- STAYMARK marking tape, or equivalent may be used, as approved or directed by the City Engineer.

Layout:
- Layout shall be made using marking chalk.
- It is recommended that marking layout be inspected by the City Engineer prior to the placement of final markings.

TEMPORARY MARKINGS

Temporary markings may be used only as specified in this section, or as approved or directed by the City Engineer.

Final Pavement Surface:
- Only foil backed marking tape is allowed.
- All tape shall be totally removed concurrent with permanent marking placement.

Other Pavement Surfaces:
- Intermediate pavement surfaces may be marked with FDOT approved materials, designs, and specifications.

CITY of DELRAY BEACH — ENVIRONMENTAL SERVICES DEPARTMENT | PAVEMENT MARKING SPECIFICATIONS (SHEET 1 OF 2) | DATE: 12-30-2002 | RT 8.1a

ALL PAVEMENT MARKINGS

All paved surfaces shall be properly marked prior to the hours of darkness.

RAISED PAVEMENT MARKERS

- R.P.M.s shall be installed on all lane lines and centerlines, spaced at 20' or 40'.
- R.P.M.s shall be a 4 x 4 type class "B" marker meeting F.D.O.T. specifications and shall be approved by the City Engineer prior to use.
- R.P.M.'s shall be installed using alkyd thermoplastic on asphalt and epoxy on concrete.

OTHER NOTES

- All Materials within right-of-way shall be thermoplastic and per F.D.O.T. specifications.
- Pavement marking within private parking lots may be painted according to F.D.O.T. specifications, except for all stop bars adjacent to public rifgt-of-way.

CITY of DELRAY BEACH — ENVIRONMENTAL SERVICES DEPARTMENT | PAVEMENT MARKING SPECIFICATIONS (SHEET 2 OF 2) | DATE: 08-04-2011 | RT 8.1b

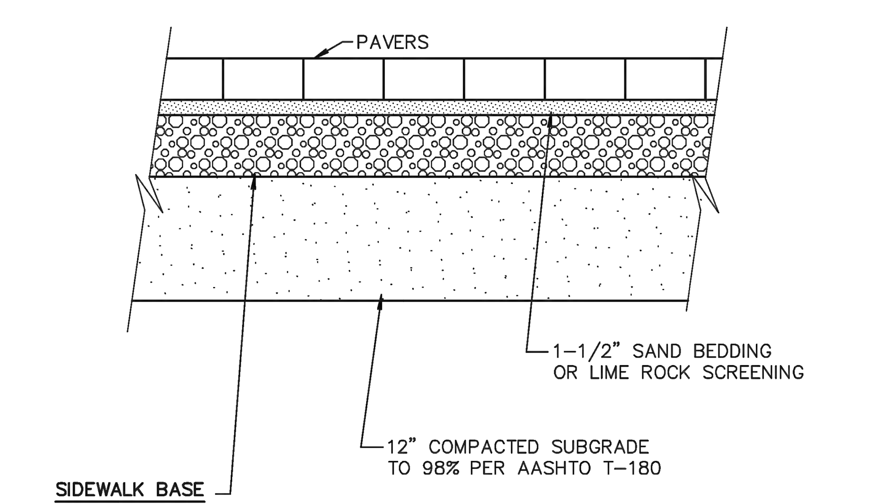

SIDEWALK BASE
OUTSIDE RIGHT OF WAY 4" LIMEROCK BASE COMPACTED TO 98% PER AASHTO T-180.
INSIDE RIGHT OF WAY 6" LIMEROCK BASE COMPACTED TO 98% PER AASHTO T-180 OR 4" FLOW-ABLE FILL (100 P.S.I. MIN.)

ROADWAY BASE
INSIDE RIGHT OF WAY 8" LIMEROCK BASE COMPACTED TO 98% PER AASHTO T-180 OR 6" FLOW-ABLE FILL (100 P.S.I. MIN.)

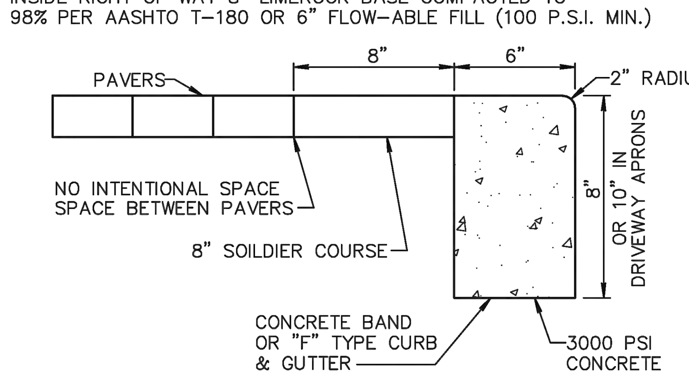

NOTE:
IF CITY APPROVES PAVERS TO BE USED IN LIEU OF CONC. SIDEWALK, PAVER SHALL BE HOLLAND-STONE, 45° HERRING BONE, RED/CHARCOAL, COLOR MIX #2.

CITY of DELRAY BEACH — ENVIRONMENTAL SERVICES DEPARTMENT | PAVER BRICK SECTION | DATE: 08-04-2011 | RT 10.1a

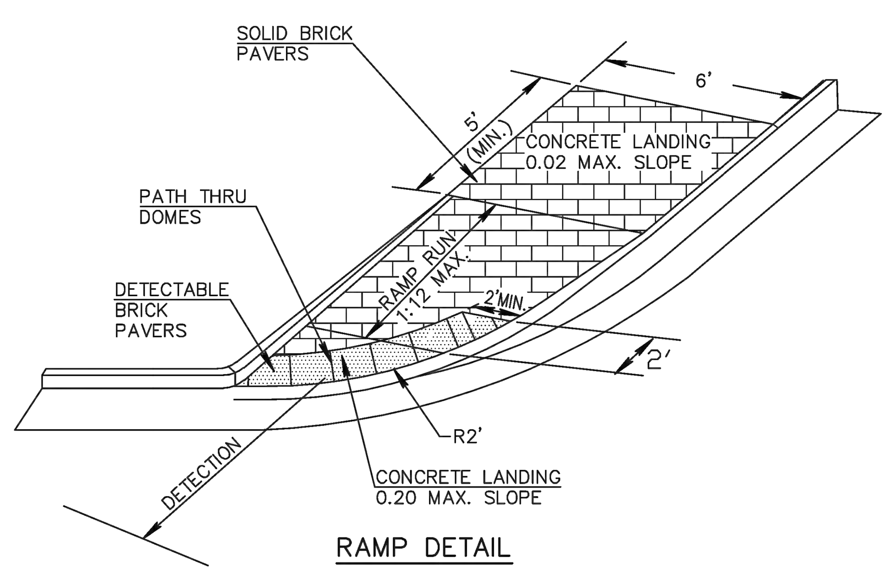

RAMP DETAIL

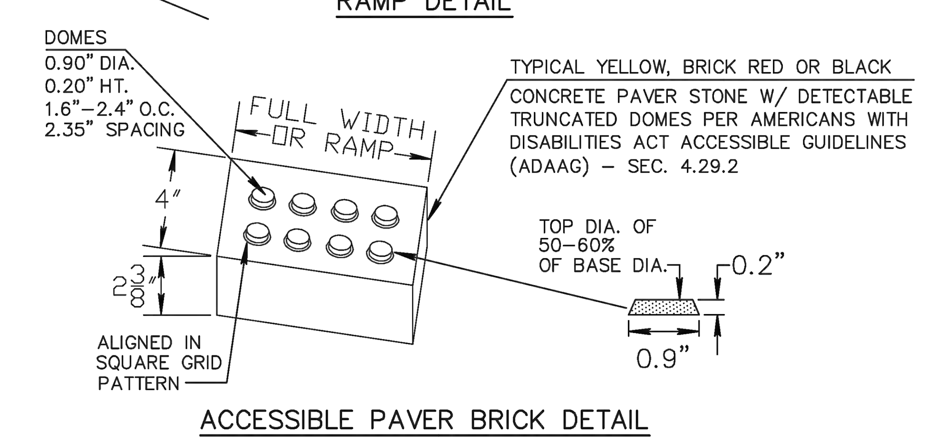

ACCESSIBLE PAVER BRICK DETAIL

1. IN ADDITION TO CURB RAMPS TRUNCATED DOMES ARE REQUIRED AT ALL AREAS OF PERIL.

CITY of DELRAY BEACH — ENVIRONMENTAL SERVICES DEPARTMENT | DETECTABLE WARNING RAMP IN PAVER SIDEWALK TYPICAL DETAIL | DATE: 6/5/2008 | RT 10.3

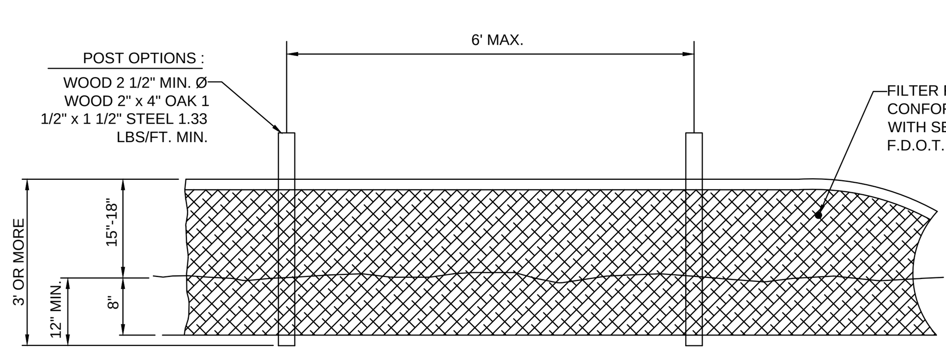

SILT FENCE DETAIL NOT TO SCALE (PER FDOT INDEX #102)

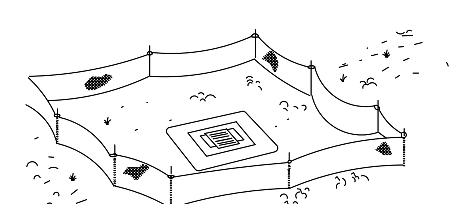

SILT FENCE PROTECTION AROUND DITCH BOTTOM INLETS

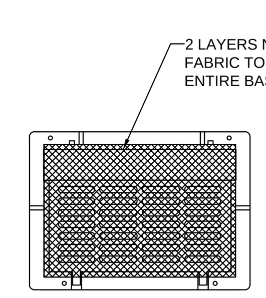

CURB INLET PROTECTION DETAIL NOT TO SCALE

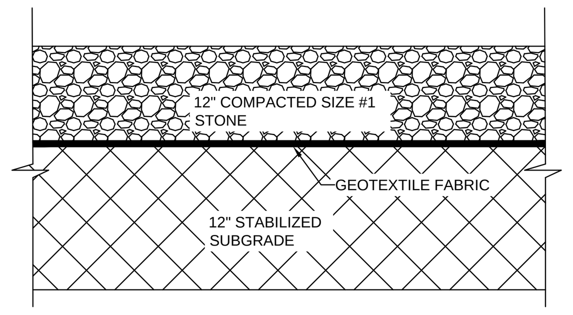

SOIL TRACKING PREVENTION MAT DETAIL NOT TO SCALE (PER FDOT INDEX #106)

BOHLER ENGINEERING
SITE CIVIL AND CONSULTING ENGINEERING
LAND SURVEYING
PROGRAM MANAGEMENT
LANDSCAPE ARCHITECTURE
SUSTAINABLE DESIGN
PERMITTING SERVICES
TRANSPORTATION SERVICES

THE INFORMATION, DESIGN AND CONTENT OF THIS PLAN ARE PROPRIETARY AND SHALL NOT BE COPIED OR USED FOR ANY PURPOSE WITHOUT PRIOR WRITTEN AUTHORIZATION FROM BOHLER ENGINEERING. ONLY APPROVED, SIGNED AND SEALED PLANS SHALL BE UTILIZED FOR CONSTRUCTION PURPOSES. © BOHLER ENGINEERING

REVISIONS

REV	DATE	COMMENT	DRAWN BY / CHECKED BY
1	2019-08-23	CITY OF DELRAY BEACH COMMENTS	LJL / AS
2	2019-09-10	SPRAB COMMENTS	LJL / AS

THIS DRAWING IS INTENDED FOR MUNICIPAL AND/OR AGENCY REVIEW AND APPROVAL. IT IS NOT INTENDED AS A CONSTRUCTION DOCUMENT UNLESS INDICATED OTHERWISE.

811 Know what's below. Call before you dig.
ALWAYS CALL 811
It's fast. It's free. It's the law.

ISSUED FOR MUNICIPAL & AGENCY REVIEW & APPROVAL

PROJECT No.:	FLB180120
DRAWN BY:	LJL
CHECKED BY:	AS
DATE:	2019-10-25
CAD I.D.:	FLB180120-SDP-1

PROJECT:
PIERRE DELRAY PHASE 1 - SPRAB SITE PLAN PACKAGE (AKA SUNTRUST BUILDING)
FOR
CLIENT
ZYSCOVICH ARCHITECTS
PROPOSED DEVELOPMENT
302 E ATLANTIC AVE
PALM BEACH COUNTY
DELRAY BEACH, FL

BOHLER ENGINEERING
2255 GLADES ROAD, SUITE 305E
BOCA RATON, FLORIDA 33431
Phone: (561) 571-0280
Fax: (561) 571-0281
FLORIDA BUSINESS CERT. OF AUTH. No. 30780
LANDSCAPE ARCHITECT BUSINESS LIC. No LC26000551

SHEET TITLE:
DETAILS

SHEET NUMBER:
C-902

REVISION 2 - 2019-09-10